Cambridge Assessment International Education

Cambridge IGCSE™

CANDIDATE NAME									
CENTRE NUMBER						CANDIDATE NUMBER			

PHYSICS **0625/32**

Paper 3 Theory (Core) **May/June 2021**

1 hour 15 minutes

You must answer on the question paper.

No additional materials are needed.

INSTRUCTIONS

- Answer **all** questions.
- Use a black or dark blue pen. You may use an HB pencil for any diagrams or graphs.
- Write your name, centre number and candidate number in the boxes at the top of the page.
- Write your answer to each question in the space provided.
- Do **not** use an erasable pen or correction fluid.
- Do **not** write on any bar codes.
- You may use a calculator.
- You should show all your working and use appropriate units.
- Take the weight of 1.0 kg to be 10 N (acceleration of free fall = 10 m / s^2).

INFORMATION

- The total mark for this paper is 80.
- The number of marks for each question or part question is shown in brackets [ ].

This document has **16** pages. Any blank pages are indicated.

© UCLES 2021

1 Fig. 1.1 shows the core of a transformer. It is made from thin sheets of iron.

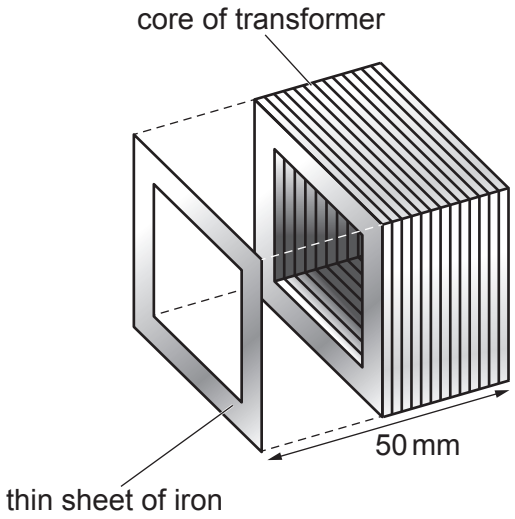

Fig. 1.1 (not to scale)

(a) There are 200 sheets of iron in the core of the transformer. The thickness of the core is 50 mm.

Calculate the average thickness of **one** sheet of iron.

View solution

average thickness of one sheet = ... mm [3]

(b) The density of the iron in the core is 7.65 g / cm^3. The mass of the core is 1377 g.

View solution

Calculate the volume of the core.

volume = ... cm^3 [3]

(c) State the name of a device used to measure mass.

..... [1]

[Total: 7]

View solution

2 Fig. 2.1 shows how the speed of a car varies between 0 and 60.0 s.

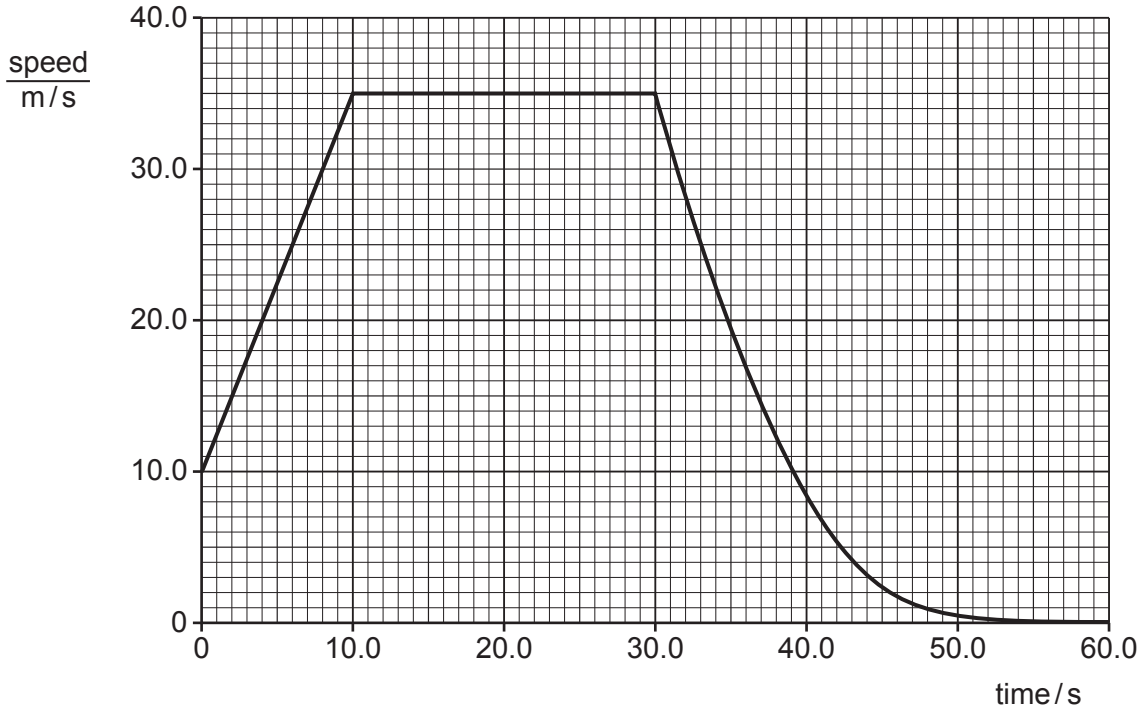

Fig. 2.1

(a) Determine the speed of the car using information from Fig. 2.1:

View solution

(i) when the time is 5.0 s

speed = ... m / s [2]

(ii) when the car is moving with a constant speed.

View solution

speed = ... m / s [1]

(b) Describe how the speed of the car changes between 30.0 s and 60.0 s.

View solution

..... [2]

(c) Determine the distance travelled by the car between 10.0 s and 30.0 s.

View solution

distance travelled = ... m [3]

(d) The total distance travelled by the car in the last 30.0 s is 226 m.

View solution

Calculate the average speed of the car in the last 30.0 s.

average speed = ... m / s [3]

[Total: 11]

3 Fig. 3.1 shows a barrier used at a car park. The beam can be raised and lowered by a man rotating it about its pivot.

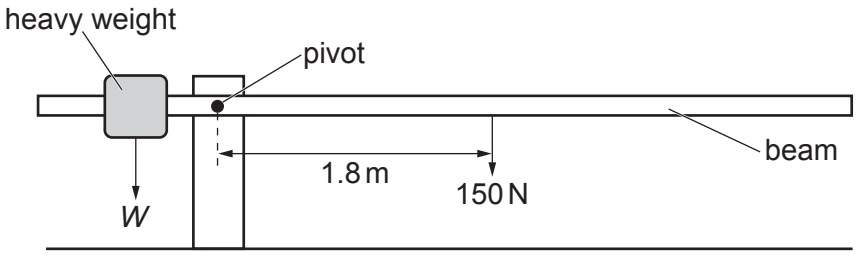

Fig. 3.1 (not to scale)

(a) The weight of the beam is 150 N. This acts at a distance of 1.8 m from the pivot as shown in Fig. 3.1.

View solution

Calculate the moment of the weight of the beam about the pivot.

Include the correct unit in your answer.

moment of weight of beam = ... unit ..... [4]

(b) When the weight *W* of the heavy weight acts at a distance of 0.6 m from the pivot, the barrier is horizontal and balanced as shown in Fig. 3.1.
The man raises the barrier and the heavy weight slips to a distance of 0.8 m from the pivot. This causes a problem for the man trying to lower the barrier.

View solution

Describe and explain the problem this causes for the man lowering the barrier.

.....

.....

.....

.....

..... [3]

[Total: 7]

© UCLES 2021

4 A student investigates energy changes when a ball rolls down a curved track.

The student holds the ball at a starting point on the curved track, as shown in Fig. 4.1.

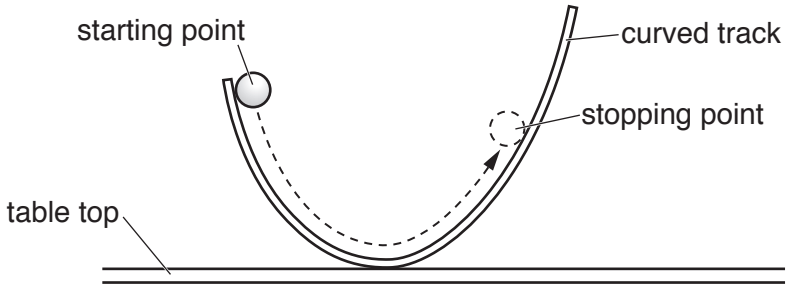

Fig. 4.1

View solution

The ball is released. It rolls down the track, up the other side to the stopping point and then back down again.

(a) Describe the energy changes that take place as the ball rolls from the starting point to the stopping point.

.....

.....

.....

..... [4]

(b) The height of the stopping point is less than the height of the starting point.

Describe how the principle of conservation of energy explains the difference between the height of the stopping point and the height of the starting point.

.....

.....

..... [2]

[Total: 6]

View solution

5 Fig. 5.1 shows a device connected to a gas cylinder. The device is used to measure the pressure of the gas inside the cylinder.

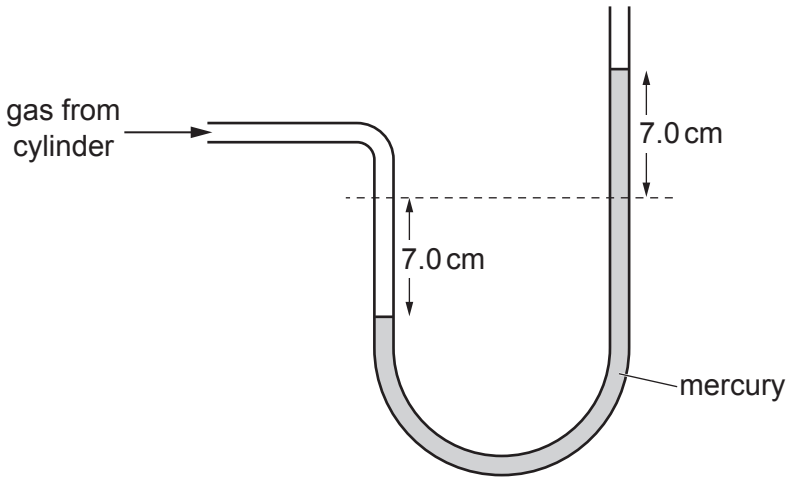

Fig. 5.1

(a) (i) State the name of the device shown in Fig. 5.1.

View solution

..... [1]

(ii) The atmospheric pressure is equal to 75 cm of mercury.

View solution

Determine the pressure of the gas in the cylinder. Use information from Fig. 5.1.

pressure of gas = ... cm of mercury [2]

(b) Fig. 5.2 shows two identical heavy stone tiles placed on soft ground. One is vertical and the other is horizontal.

View solution

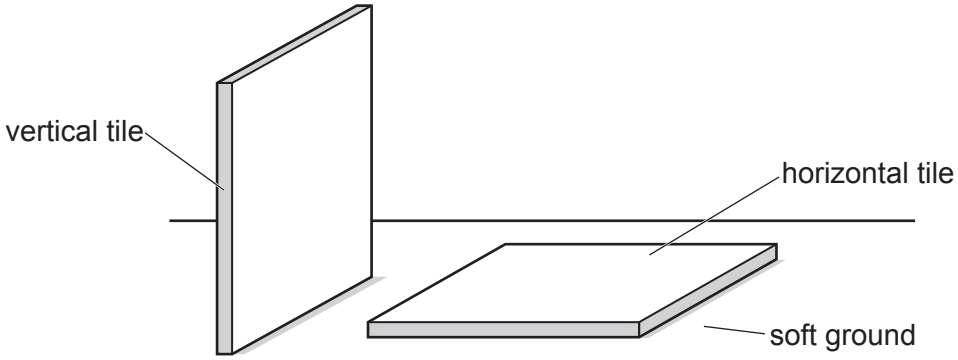

Fig. 5.2

One of the tiles sinks into the soft ground.

State and explain which tile sinks into the soft ground.

.....

.....

.....

.....

.....

..... [4]

[Total: 7]

6 **(a)** Fig. 6.1 shows a liquid-in-glass thermometer.

View solution

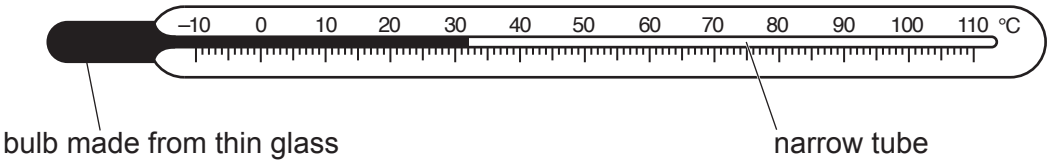

Fig. 6.1

(i) State the temperature indicated on the thermometer in Fig. 6.1.

..... [1]

View solution

(ii) Explain why:

1. the bulb is made from thin glass

.....

.....

..... [1]

2. the tube, along which the liquid expands, is narrow.

.....

.....

..... [1]

(b) A substance cools from 40 °C to –20 °C.

The substance takes 40 minutes to cool from 40 °C to its melting point of –12 °C. The substance then takes 20 minutes to freeze.

On Fig. 6.2, sketch a temperature–time graph as the substance cools from 40 °C to –20 °C.

View solution

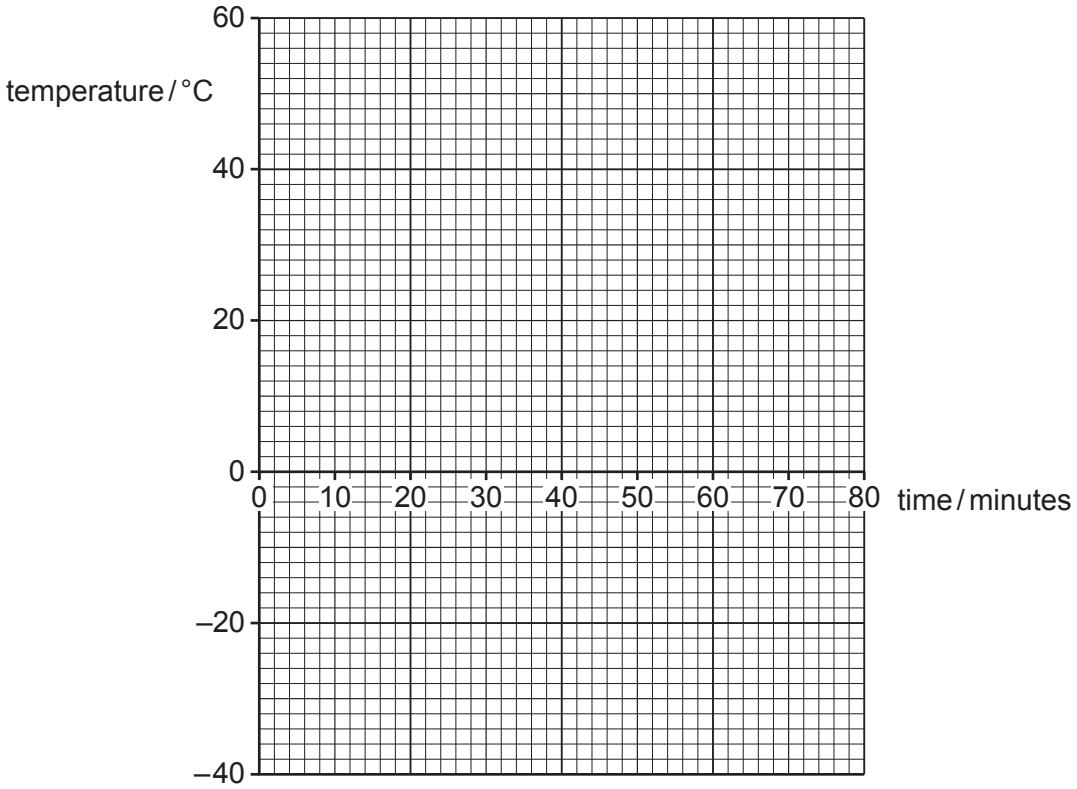

Fig. 6.2

[4]

[Total: 7]

7 **(a)** Both radio waves and γ-rays (gamma) are radiations in the electromagnetic spectrum. Fig. 7.1 shows the main regions of the electromagnetic spectrum. Most regions are labelled.

radio waves	microwave radiation	infrared radiation	visible light	....	....	γ-rays

Fig. 7.1

(i) On Fig. 7.1, write the names of the radiations in the other **two** parts of the electromagnetic spectrum. [2]

(ii) State **one** use of γ-rays.

..... [1]

(iii) A star emits radio waves and γ-rays at the same time. They all travel across the vacuum of space to the Earth's atmosphere.

State whether the radio waves or the γ-rays, if either, arrive first at the Earth's atmosphere. Give a reason for your answer.

statement .....

reason ..... [2]

View solution

(b) Fig. 7.2 shows pulses of a signal from a star.

View solution

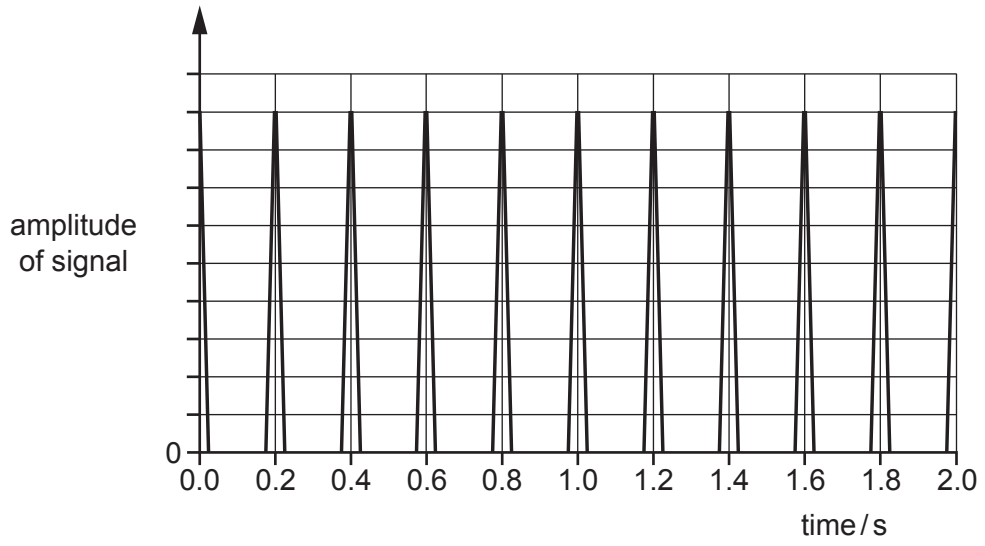

Fig. 7.2

(i) Use the graph in Fig. 7.2 to determine the time between pulses.

time between pulses = ... s [2]

(ii) Determine the frequency of the pulses in Fig. 7.2.

View solution

frequency = ... Hz [2]

[Total: 9]

© UCLES 2021

8 A student uses a semicircular glass block to investigate refraction.

View solution

(a) He shines a ray of red light into the block, as shown in Fig. 8.1.
X is the middle of the flat surface.

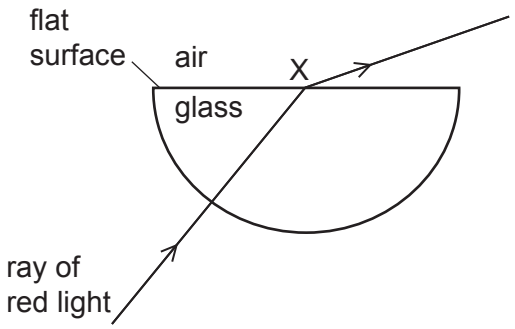

Fig. 8.1

(i) On Fig. 8.1, draw the normal where the ray meets the flat surface at X. [1]

(ii) On Fig. 8.1, label the angle of refraction. Use the letter R for the label. [1]

(iii) The student uses a semicircular glass block. State the name of **one** other piece of equipment that he needs for the investigation.

..... [1]

View solution

(b) Fig. 8.2 shows a ray of red light incident on the flat surface of the semicircular glass block.
The angle of incidence is greater than the critical angle for glass.

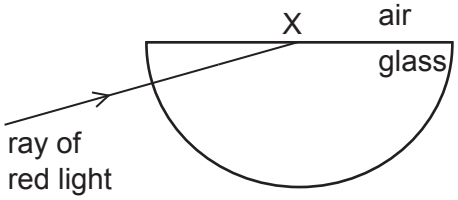

Fig. 8.2

On Fig. 8.2, draw the path of the ray after it strikes the flat surface. [2]

[Total: 5]

9 **(a)** Fig. 9.1 shows an electric circuit.

View solution

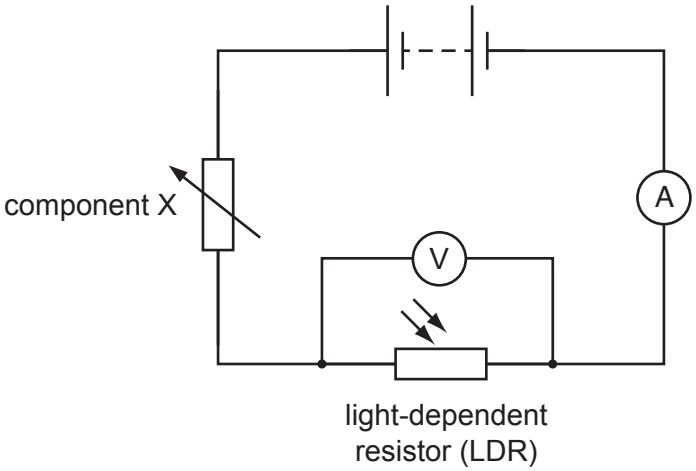

Fig. 9.1

(i) The current in the metal wires of the circuit is a flow of particles.
State the name of these particles.

..... [1]

(ii) State the name of component X.

View solution

..... [1]

(iii) The circuit is in a darkened room. The voltmeter reading is 5.5 V and the ammeter reading is 0.050 A.

Calculate the resistance of the light-dependent resistor (LDR).

View solution

resistance = ... Ω [3]

(b) The light in the room is switched on. The room becomes bright.

State and explain how increasing the brightness of the light that falls on the LDR changes the current in the circuit.

.....

..... [2]

[Total: 7]

View solution

10 Fig. 10.1 shows an electric screwdriver which has an electric motor and a battery.

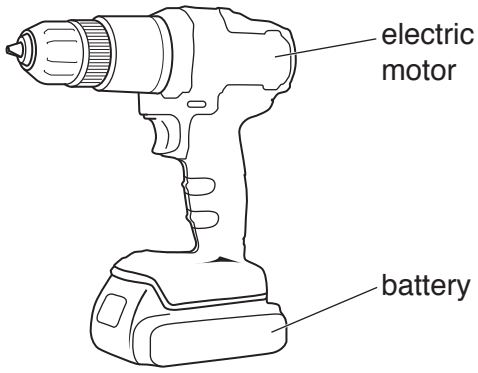

Fig. 10.1

(a) (i) The electric motor has a current-carrying coil in a magnetic field. The screwdriver's manufacturer decides that the turning effect of the coil is too small.

State **three** ways of increasing the turning effect of the coil.

View solution

1. .....

2. .....

3. .....

[3]

(ii) The coil in the motor can rotate in either direction.

State what happens in the coil to reverse the direction of rotation.

View solution

..... [1]

(b) The battery is charged using a transformer connected to an a.c. power supply.

The primary voltage V_p to the transformer is 234 V and the secondary voltage V_s of the transformer is 18 V.

The number of turns on the primary coil N_p is 2470 turns.

View solution

Calculate the number of turns on the secondary coil N_s.

N_s = ... [3]

[Total: 7]

© UCLES 2021

11 (a) The nuclide notation ${}^{A}_{Z}X$ describes the nucleus of an atom.

View solution

Draw a line from each symbol to the correct description of the symbol.

symbol	**description**
	half-life value
A	neutron number
	nucleon number
Z	type of radiation
	proton number

[2]

(b) The activity of a sample of a radioactive nuclide is measured in June of each year.
In June 2004 the activity was 80 000 counts / s.
In June 2014 the activity was 20 000 counts / s.

View solution

(i) Show that the half-life of the nuclide is 5 years.

[3]

(ii) Determine the year when the activity of the sample was 10 000 counts / s.

View solution

year = ... [2]

[Total: 7]

© UCLES 2021

BLANK PAGE

Permission to reproduce items where third-party owned material protected by copyright is included has been sought and cleared where possible. Every reasonable effort has been made by the publisher (UCLES) to trace copyright holders, but if any items requiring clearance have unwittingly been included, the publisher will be pleased to make amends at the earliest possible opportunity.

To avoid the issue of disclosure of answer-related information to candidates, all copyright acknowledgements are reproduced online in the Cambridge Assessment International Education Copyright Acknowledgements Booklet. This is produced for each series of examinations and is freely available to download at www.cambridgeinternational.org after the live examination series.

Cambridge Assessment International Education is part of the Cambridge Assessment Group. Cambridge Assessment is the brand name of the University of Cambridge Local Examinations Syndicate (UCLES), which itself is a department of the University of Cambridge.

© UCLES 2021