Cambridge Assessment International Education

Cambridge IGCSE™

CANDIDATE NAME									
CENTRE NUMBER						CANDIDATE NUMBER			

PHYSICS **0625/42**

Paper 4 Theory (Extended) **May/June 2021**

1 hour 15 minutes

You must answer on the question paper.

No additional materials are needed.

INSTRUCTIONS

- Answer **all** questions.
- Use a black or dark blue pen. You may use an HB pencil for any diagrams or graphs.
- Write your name, centre number and candidate number in the boxes at the top of the page.
- Write your answer to each question in the space provided.
- Do **not** use an erasable pen or correction fluid.
- Do **not** write on any bar codes.
- You may use a calculator.
- You should show all your working and use appropriate units.
- Take the weight of 1.0 kg to be 10 N (acceleration of free fall = 10 m / s^2).

INFORMATION

- The total mark for this paper is 80.
- The number of marks for each question or part question is shown in brackets [ ].

This document has **16** pages.

© UCLES 2021

1 **(a)** Fig. 1.1 shows a sealed weather balloon which is stationary in still air.

View solution

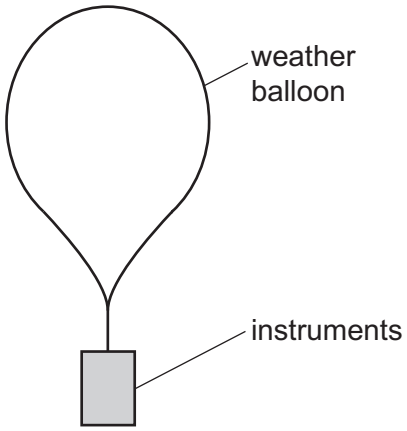

Fig. 1.1

State whether the overall density of the balloon and its instruments is greater than, less than, or the same as the density of the surrounding air.

..... [1]

(b) At night, the gas inside the balloon cools. The pressure of the air outside the balloon remains the same.

View solution

(i) State whether the balloon rises, falls or remains stationary.

..... [1]

View solution

(ii) Explain your answer.

.....

.....

..... [2]

(c) An object is released from the balloon. It starts at rest and eventually reaches a constant speed.

View solution

(i) On the axes of Fig. 1.2, sketch a speed–time graph to show this motion.



Fig. 1.2

[3]

View solution

(ii) State the values of the initial acceleration and the final acceleration of the object.

initial acceleration .....

final acceleration .....

[2]

[Total: 9]

2 **(a)** Define the *moment* of a force.

..... [1]

(b) Fig. 2.1 shows an object of negligible weight. The object is in equilibrium.

View solution

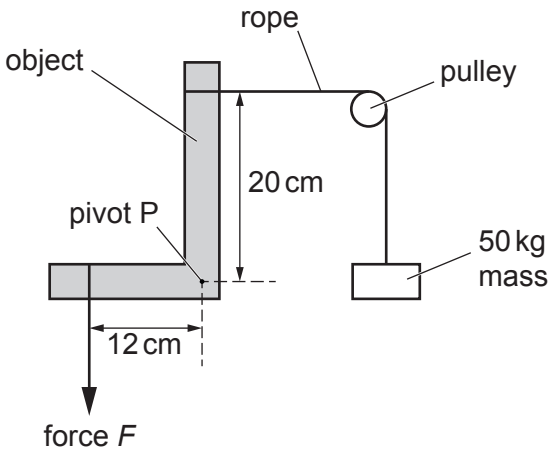

Fig. 2.1

The object is free to rotate about its pivot P.

Calculate the value of force *F*.

F = ... [2]

(c) Describe an experiment involving vertical forces to show that there is no net moment on an object in equilibrium. You may draw a diagram in the space provided.

View solution

.....

.....

.....

.....

.....

..... [3]

[Total: 6]

© UCLES 2021

3 Fig. 3.1 shows water flowing at very slow speed over a cliff edge.

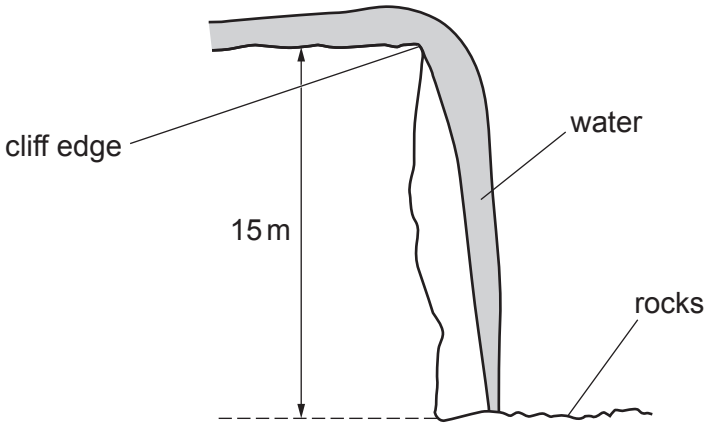

Fig. 3.1

The water falls 15 m onto the rocks below.

(a) Show that the velocity of the water when it strikes the rocks is 17 m / s.

View solution

[4]

(b) 30 kg of water flows over the cliff edge every second.

Calculate the force exerted by the rocks on the falling water. Ignore any splashing.

View solution

force = ... [3]

[Total: 7]

© UCLES 2021

4 **(a)** Pollen particles are mixed into a liquid. They are seen to move when observed through a microscope.

View solution

(i) Describe this movement.

..... [1]

(ii) Explain this movement in terms of the molecules of the liquid and the pollen particles.

View solution

.....

.....

..... [3]

(b) **(i)** Medical professionals sometimes rub ethanol over the skin of a patient. Ethanol evaporates readily at room temperature and has a high specific latent heat of vaporisation.

State whether the patient experiences heating, cooling or neither at the site where the ethanol is applied. Explain your answer.

statement .....

explanation .....

.....

..... [3]

(ii) State any effect on the rate of evaporation of ethanol when a fan blows air over the patient's skin.

..... [1]

[Total: 8]

View solution

5 **(a)** A machine delivers a hot drink in a plastic cup, which is uncomfortably hot to hold.

View solution

Fig. 5.1 shows the cup with the hot drink.

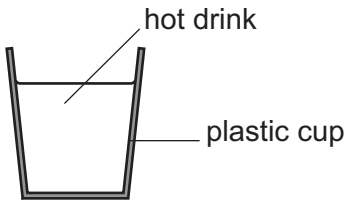

Fig. 5.1

Fig. 5.2a shows the cup with the hot drink and a holder for the sides of the cup.

Fig. 5.2b shows a cross-section through the holder. The holder is made from two strong paper cylinders separated by a wavy piece of strong paper to make air gaps.

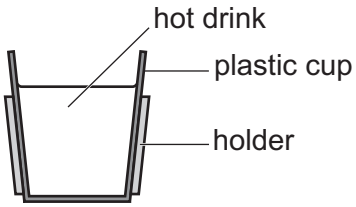

Fig. 5.2a

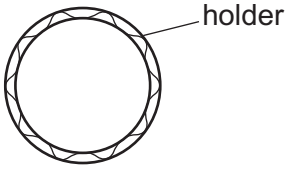

Fig. 5.2b

Explain how using the holder makes it more comfortable to hold the cup.

.....

.....

..... [3]

(b) A student carries out experiments on the cooling of the hot drink described in **(a)**, with and without the holder in place. He finds that the holder only reduces the rate of cooling slightly.

Suggest and explain another action that reduces the rate of cooling more effectively.

View solution

suggestion .....

explanation .....

.....

..... [3]

(c) State the method of thermal energy transfer from a star through the vacuum of space.

..... [1]

View solution [Total: 7]

6 **(a)** Fig. 6.1 shows a ray of green light passing through a prism.

View solution

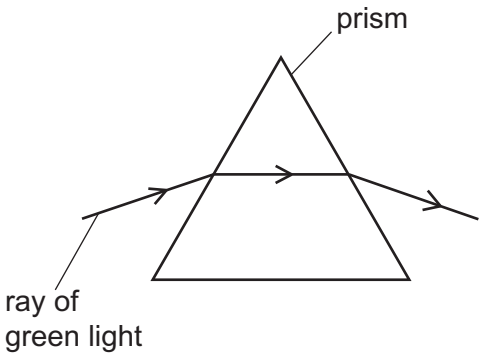

Fig. 6.1

A ray of blue light is directed towards the prism on the same path as the ray of green light.

On Fig. 6.1, draw the path of the blue light through and out of the prism. [3]

(b) The wavelength of the blue light in air is 4.8×10^{-7} m.

View solution

Calculate the frequency of the blue light.

frequency = ... [3]

[Total: 6]

© UCLES 2021

7 **(a)** Fig. 7.1 shows two magnets and the gap between the N pole of one magnet and the S pole of the other magnet.

View solution

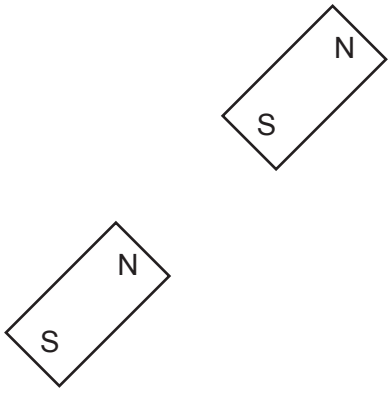

Fig. 7.1

On Fig. 7.1, draw **three** lines to show the pattern and direction of the magnetic field in the gap. [2]

(b) **(i)** Fig. 7.2 is a repeat of Fig. 7.1 showing the two magnets.

On Fig. 7.2, draw the position of a plotting compass needle when it comes to rest in the gap between the N pole and the S pole.

View solution

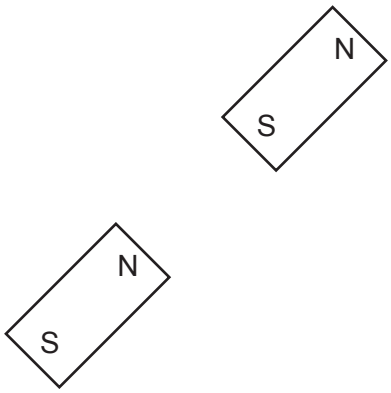

Fig. 7.2 [1]

(ii) Explain why the needle comes to rest in this position.

View solution

.....

.....

..... [2]

(c) Describe a method of demagnetising a bar magnet.

View solution

.....

.....

..... [2]

[Total: 7]

8 **(a)** Two identical radioactive sources emit α-particles and γ-rays into two vacuum tubes.

(i) Fig. 8.1 shows two electrically charged plates on either side of one of the vacuum tubes.

View solution

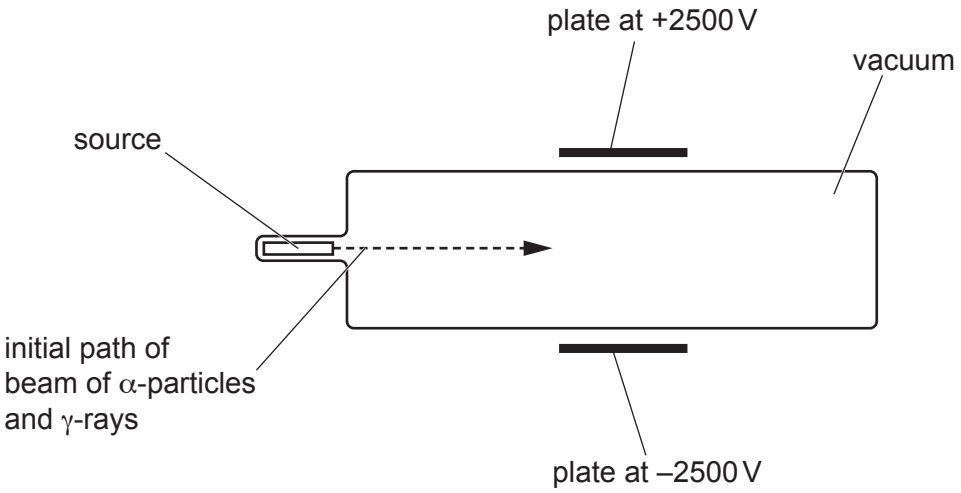

Fig. 8.1

Write the symbol α **once** in Table 8.1 to indicate any deflection of the α-particles.

Write the symbol γ **once** in Table 8.1 to indicate any deflection of the γ-rays.

Table 8.1

into page	out of page	no deflection	towards bottom of page	towards top of page

[2]

(ii) Fig. 8.2 shows the poles of a very strong magnet on either side of the other vacuum tube.

View solution

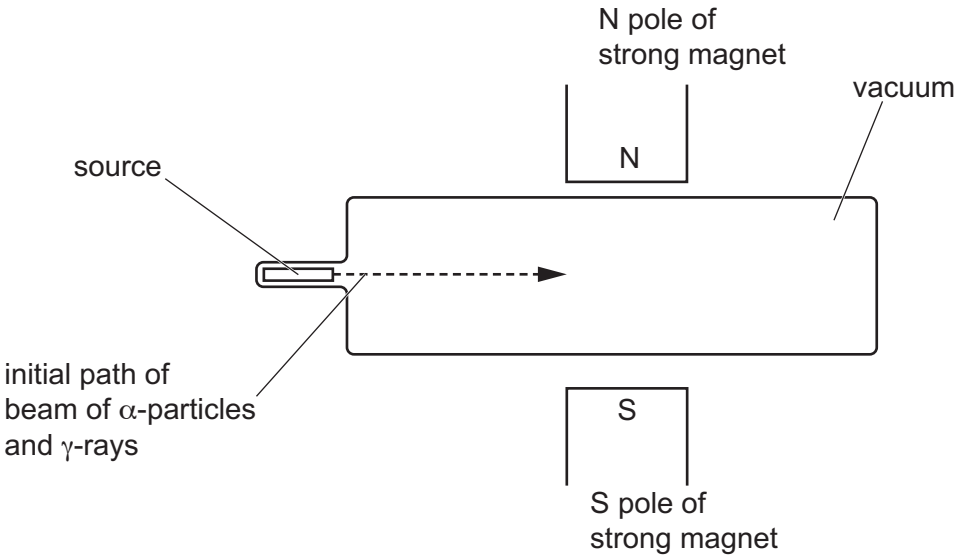

Fig. 8.2

Write the symbol α **once** in Table 8.2 to indicate any deflection of the α-particles.

Write the symbol γ **once** in Table 8.2 to indicate any deflection of the γ-rays.

Table 8.2

into page	out of page	no deflection	towards bottom of page	towards top of page

[2]

(b) Fig. 8.3 shows a simple direct current (d.c.) electric motor with a split-ring commutator.

View solution

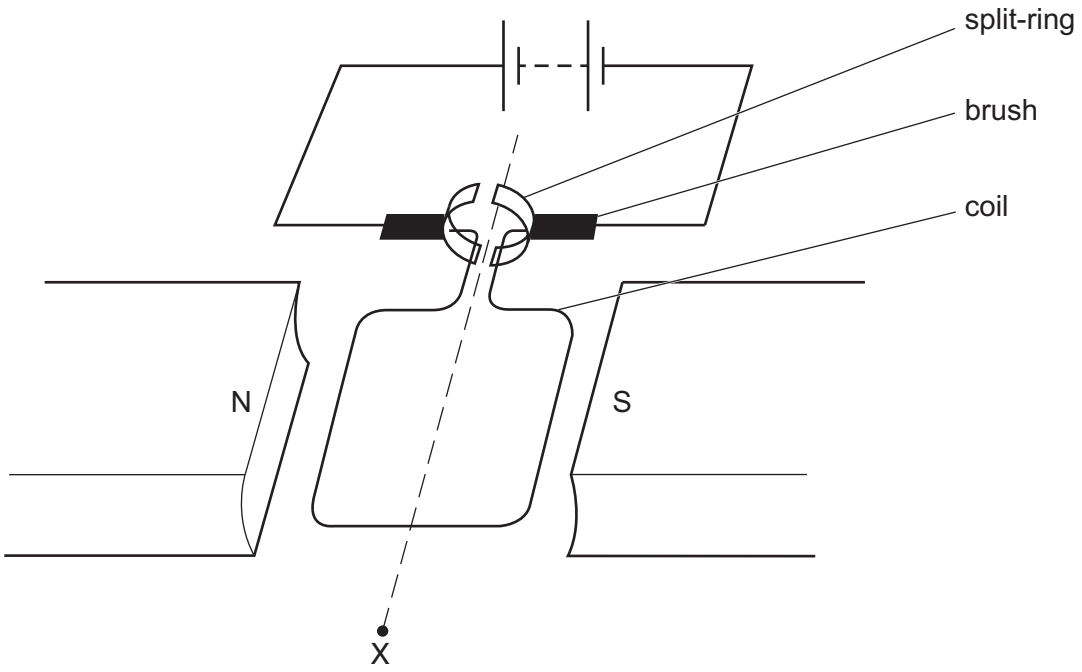

Fig. 8.3

(i) State and explain the direction of rotation of the coil as seen from point X.

statement .....

explanation .....

..... [3]

(ii) The coil rotates through 90° from the position shown.

View solution

State what happens to the moment in this position.

..... [1]

(iii) The coil is rotated through 180° from the position shown. By considering the forces on the coil, explain how the split-ring commutator enables the motor to turn continuously.

.....

..... [2]

[Total: 10]

View solution

9 **(a)** Fig. 9.1 shows a circuit.

View solution

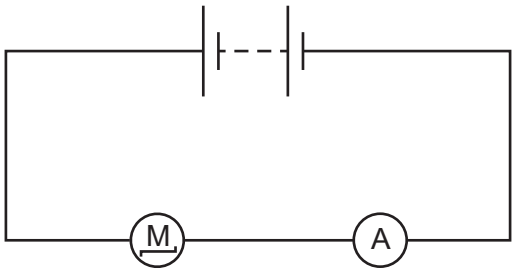

Fig. 9.1

On Fig. 9.1, draw **two** clearly labelled arrows to show the direction of the electron flow and the direction of the conventional current in the circuit. [2]

(b) The current in the motor is 13A. The charge on an electron is 1.6×10^{-19} C.

View solution

Calculate the number of electrons that pass through the motor every second.

number of electrons = ... [3]

[Total: 5]

© UCLES 2021

10 (a) Fig. 10.1 shows the potential difference–current graph for a circuit component K.

View solution

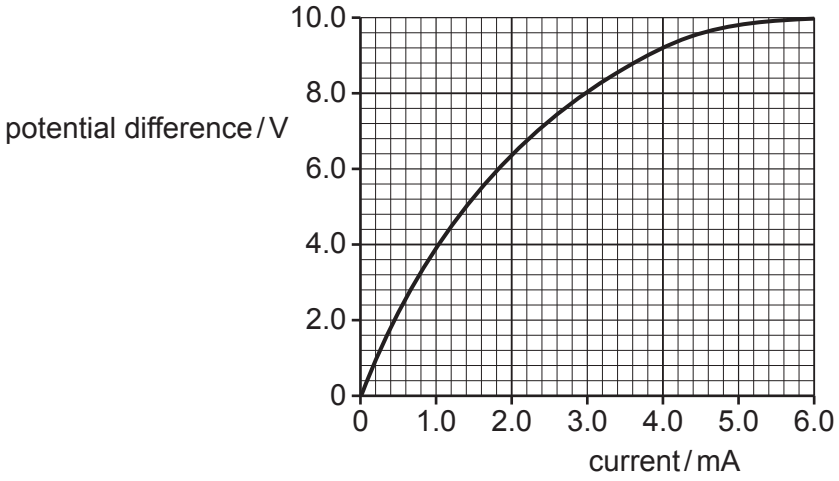

Fig. 10.1

Calculate the resistance of component K when the current in it is 4.0 mA.

resistance = ... [2]

(b) Fig. 10.2 shows a circuit containing component K.

View solution

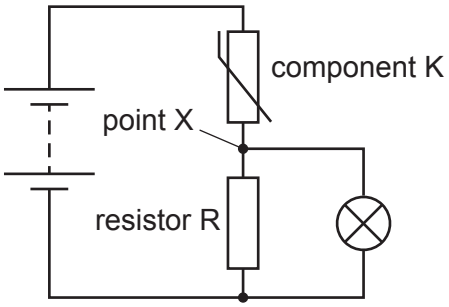

Fig. 10.2

At low temperature, component K has a much greater resistance than resistor R.

At high temperature, component K has a much smaller resistance than resistor R.

State and explain the effect on the lamp when the temperature changes from very low to very high.

Refer to the voltage at point X in your explanation.

statement .....

explanation .....

.....

.....

.....

..... [4]

(c) State the name of component K.

..... [1]

[Total: 7]

View solution

11 (a) A student investigates a radioactive substance in a laboratory.

Fig. 11.1 is a graph showing the count rate detected as the substance decays for 7.5 minutes.

View solution

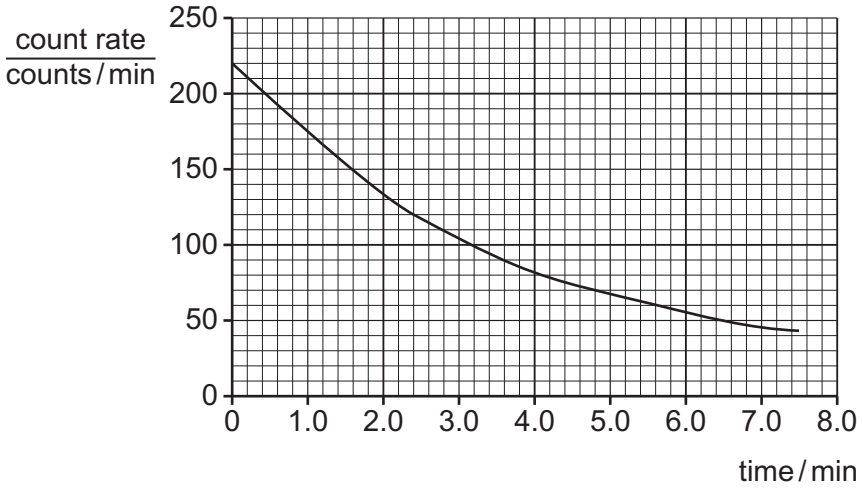

Fig. 11.1

The background radiation is 20 counts / min.

(i) Determine the half-life of the substance.

half-life = ... [3]

(ii) Calculate the count rate detected at time = 9.6 minutes.

View solution

count rate = ...counts / min [2]

(b) The substance emits α-particles and γ-rays. The student suggests that it is safe to store the substance in a plastic container of thickness 2 mm.

View solution

State and explain whether the student's suggestion is correct.

statement .....

explanation .....

..... [3]

[Total: 8]

Permission to reproduce items where third-party owned material protected by copyright is included has been sought and cleared where possible. Every reasonable effort has been made by the publisher (UCLES) to trace copyright holders, but if any items requiring clearance have unwittingly been included, the publisher will be pleased to make amends at the earliest possible opportunity.

To avoid the issue of disclosure of answer-related information to candidates, all copyright acknowledgements are reproduced online in the Cambridge Assessment International Education Copyright Acknowledgements Booklet. This is produced for each series of examinations and is freely available to download at www.cambridgeinternational.org after the live examination series.

Cambridge Assessment International Education is part of the Cambridge Assessment Group. Cambridge Assessment is the brand name of the University of Cambridge Local Examinations Syndicate (UCLES), which itself is a department of the University of Cambridge.

© UCLES 2021