Cambridge Assessment International Education

Cambridge IGCSE™

CANDIDATE NAME									
CENTRE NUMBER						CANDIDATE NUMBER			

PHYSICS **0625/43**

Paper 4 Theory (Extended) **May/June 2021**

1 hour 15 minutes

You must answer on the question paper.

No additional materials are needed.

INSTRUCTIONS

- Answer **all** questions.
- Use a black or dark blue pen. You may use an HB pencil for any diagrams or graphs.
- Write your name, centre number and candidate number in the boxes at the top of the page.
- Write your answer to each question in the space provided.
- Do **not** use an erasable pen or correction fluid.
- Do **not** write on any bar codes.
- You may use a calculator.
- You should show all your working and use appropriate units.
- Take the weight of 1.0 kg to be 10 N (acceleration of free fall = 10 m / s^2).

INFORMATION

- The total mark for this paper is 80.
- The number of marks for each question or part question is shown in brackets [ ].

This document has **16** pages. Any blank pages are indicated.

© UCLES 2021

1 Fig. 1.1 shows a load suspended from a spring.

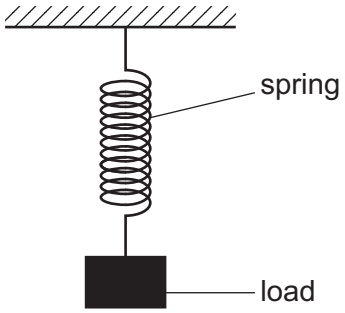

Fig. 1.1

The value of the spring constant k of the spring is 0.20 N / cm. The spring reaches its limit of proportionality when the load is 15 N.

(a) Calculate the extension of the spring when the load is 3.0 N.

View solution

extension = ... [2]

(b) Explain what is meant by the term *limit of proportionality* of the spring.

View solution

.....

.....

..... [2]

(c) On Fig. 1.2, sketch an extension–load graph for a spring. Label the limit of proportionality with the letter L on your graph.

View solution



Fig. 1.2

[2]

© UCLES 2021

(d) The load is pulled down a small distance below its equilibrium position to position A, as shown in Fig. 1.3. The load then moves up and down between position A and position B in Fig. 1.3.

View solution

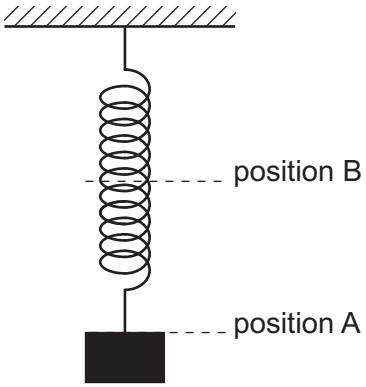

Fig. 1.3

Describe the energy transfers which occur as the load moves:

from position A to the equilibrium position

.....

.....

from the equilibrium position to position B.

.....

.....

[3]

[Total: 9]

2 **(a)** Fig. 2.1 shows a bookshelf with two groups of books A and B on it. There are six books in each group of books. All the books are identical. The mass of each book is 0.52 kg.

View solution

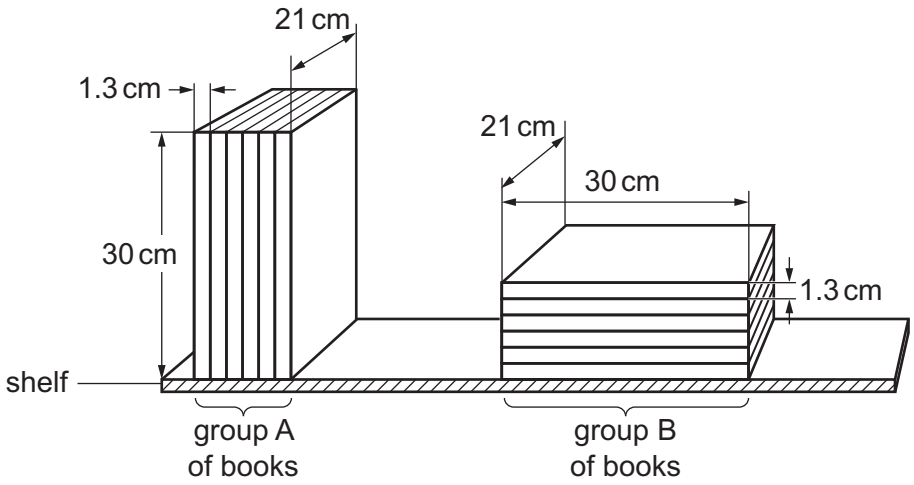

Fig. 2.1

(i) Explain why the pressure exerted on the shelf by the books in group B is less than the pressure exerted on the shelf by the books in group A.

.....

.....

..... [3]

(ii) Calculate the pressure exerted on the shelf by the books in group A.

View solution

pressure = ... [3]

(b) A diver dives to a depth below the surface of the sea where the total pressure is 3.0×10^5 Pa. The atmospheric pressure is 1.0×10^5 Pa. The density of the sea water is 1030 kg / m^3.

Calculate the depth of the diver below the surface of the sea.

View solution

depth = ... [3]

[Total: 9]

3 A car travels at constant speed v on a horizontal, straight road. The driver sees an obstacle on the road ahead.

(a) The distance travelled in the time between the driver seeing the obstruction and applying the brakes is the thinking distance.

View solution

Explain why the thinking distance is directly proportional to v.

.....

..... [1]

(b) When the brakes are applied, the car decelerates uniformly to rest. The frictional force applied by the brakes is constant. The distance travelled between first applying the brakes and the car stopping is the braking distance.

View solution

Explain why the braking distance is proportional to v^2.

.....

.....

.....

..... [3]

(c) The car is travelling at 22 m / s.

View solution

(i) The thinking distance is 15 m.

Calculate the time taken to travel the thinking distance.

time = ... [2]

(ii) The car has a mass of 1400 kg. The time taken for the car to stop after the brakes are applied is 2.1 s.

View solution

Calculate the force required to stop the car in this time.

force = ... [2]

[Total: 8]

4 (a) (i) Define *specific latent heat of fusion*.

View solution

.....

..... [2]

(ii) A cup of water contains 250 cm^3 of water at a temperature of 0 °C. An identical cup contains 250 cm^3 of a mixture of ice and water at a temperature of 0 °C.

The temperature of the surrounding air is 20 °C.

View solution

State and explain which cup contains the liquid with the lower temperature after 10 minutes.

statement .....

explanation .....

..... [2]

(b) (i) On a hot day, sweat forms on a person's skin and then evaporates.

View solution

Explain, in terms of molecules, how the evaporation of sweat cools the person.

.....

.....

.....

.....

..... [3]

(ii) Explain why this process is more effective when a wind is blowing.

View solution

.....

..... [1]

[Total: 8]

© UCLES 2021

5 **(a)** Fig. 5.1 shows a wave on the sea approaching a harbour.

View solution

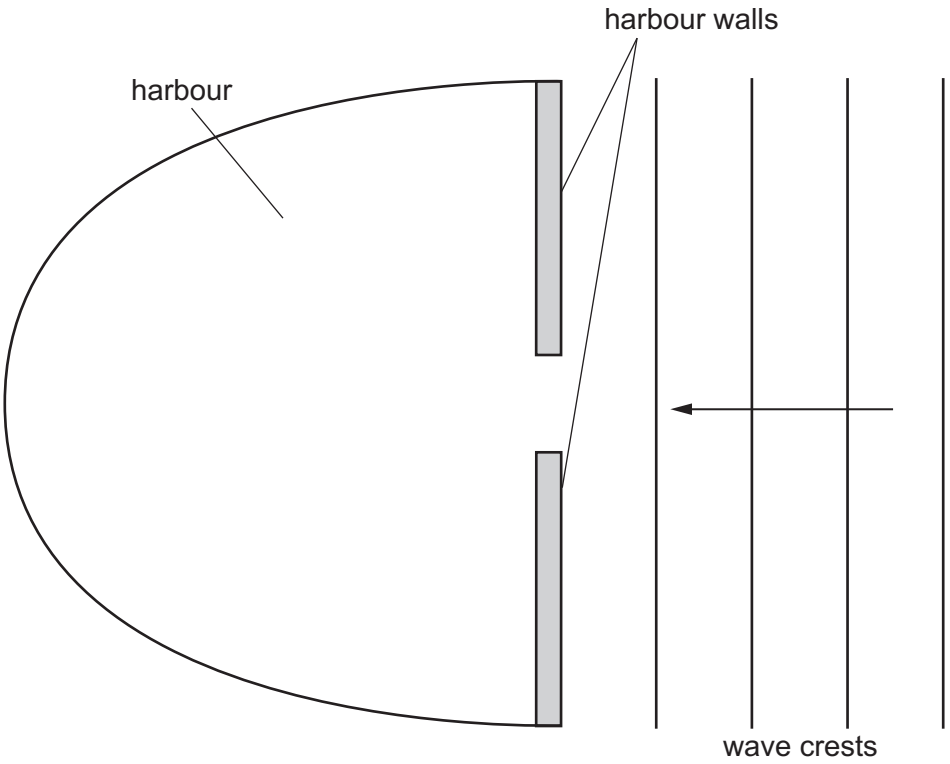

Fig. 5.1

(i) On Fig. 5.1, draw **three** wave crests in the harbour. [2]

(ii) Another harbour has a much wider gap between its walls.

Describe and explain how the pattern of wave crests in this harbour is different from the pattern you have drawn in **(i)**.

description .....

.....

explanation .....

..... [2]

View solution

(b) A sound wave of frequency 850 Hz travels through sea water. The speed of sound in sea water is 1500 m / s.

Calculate the wavelength of this sound wave in sea water.

View solution

wavelength = ... [2]

[Total: 6]

6 Fig. 6.1 is a full-scale diagram of a lens and an object O.

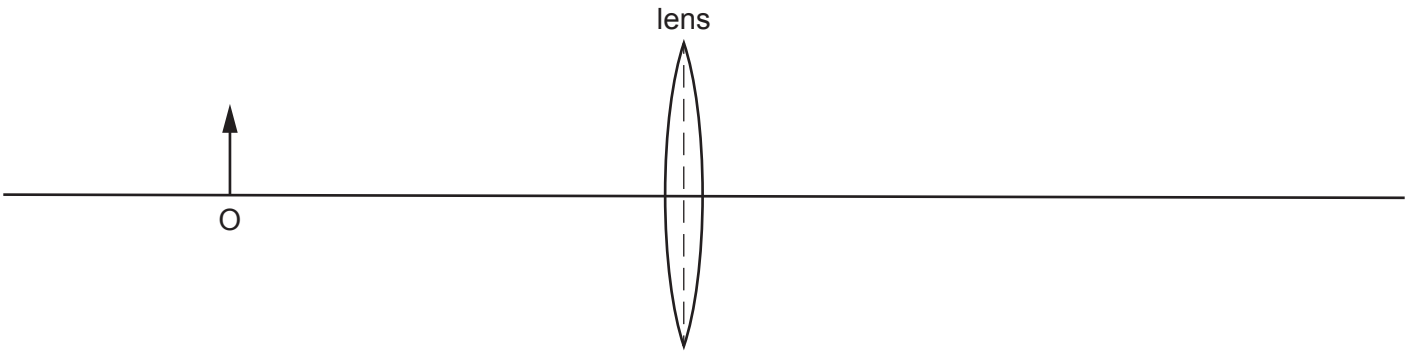

Fig. 6.1

(a) The focal length of the lens is 3.5 cm.

On Fig. 6.1, mark and label with the letter F the positions of the **two** principal focuses. [1]

(b) On Fig. 6.1, draw **three** rays to locate the image. Draw an arrow to represent the image and label the image I. [3]

(c) State **three** properties of the image I.

..... [2]

(d) A student incorrectly states that this lens is being used as a magnifying glass.

(i) State how the image produced by a magnifying glass is different from the image I.

..... [1]

(ii) The student moves the object O to a position P so that the lens shown in Fig. 6.1 acts as a magnifying glass.

On Fig. 6.1, mark a possible position for P. [1]

[Total: 8]

7 **(a)** Define *electromotive force* (*e.m.f.*).

View solution

.....

.....

..... [2]

(b) Fig. 7.1 shows a circuit.

View solution

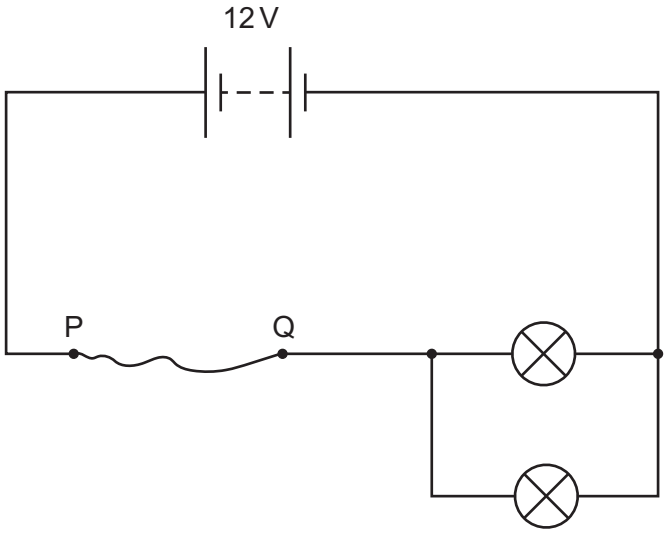

Fig. 7.1

The two lamps shown are identical. Each lamp has a potential difference (p.d.) of 3.0 V across it and a current of 2.0 A in it. PQ is a length of uniform metal wire. The resistance of PQ is *R*.

(i) Calculate the value of *R*.

R = ... [3]

(ii) Another piece of wire is made of the same metal as PQ. The length of the new piece of wire is twice the length of PQ. The diameter of the new piece of wire is twice the diameter of PQ.

Calculate the resistance of the new piece of wire.

View solution

resistance = ... [3]

[Total: 8]

© UCLES 2021

8 **(a)** State the difference between an analogue signal and a digital signal. You may draw a diagram to help explain your answer.

View solution

.....

..... [2]

(b) Draw the symbol for a NOR gate.

View solution

[1]

(c) Fig. 8.1 shows a combination of logic gates X, Y and Z. The gates are not represented by the standard symbols.

View solution

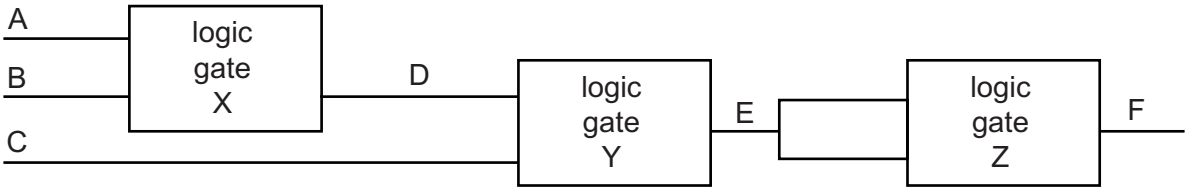

Fig. 8.1

Table 8.1 shows a partly completed truth table for this combination of logic gates.

Table 8.1

inputs			intermediate points		output
A	B	C	D	E	F
0	0	0	0	0	
0	1	0	0	0	
1	0	1	0	1	
1	1	1	1	1	
0	0	0	0	0	
0	1	0	0	0	
1	0	1	0	1	
1	1	1	1	1	

(i) From Table 8.1, deduce:

1. the name of logic gate X

..... [1]

2. the name of logic gate Y.

..... [1]

(ii) Logic gate Z is a NAND gate.

Complete column F of Table 8.1. [2]

[Total: 7]

View solution

9 **(a)** An X-ray machine requires a supply of 110 kV. The mains electricity supply is 230 V. A transformer is used to supply the correct voltage to the X-ray machine. There are 50 turns on the primary coil of the transformer.

Calculate the number of turns on the secondary coil.

View solution

number of turns = ... [2]

(b) Draw a labelled diagram of a step-down transformer. On the labels, state a suitable material for each of the components.

View solution

[3]

(c) Explain how a transformer operates.

View solution

.....

.....

.....

..... [3]

[Total: 8]

10 **(a)** Fig. 10.1 shows a beam of radiation in a vacuum. The beam contains α-particles, β-particles and γ-rays.

View solution

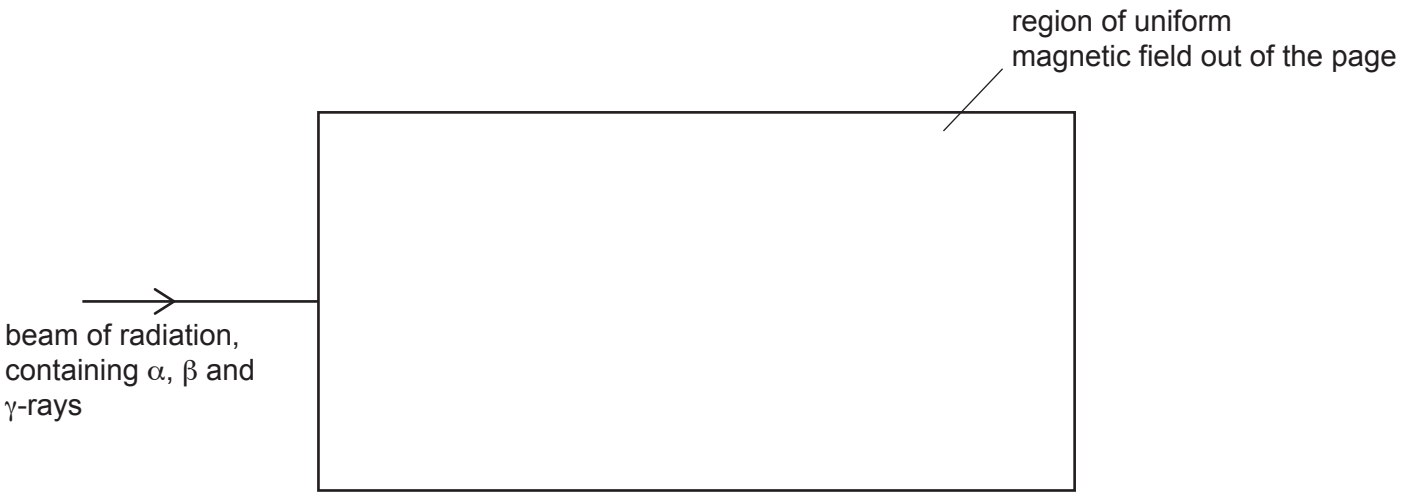

Fig. 10.1

The beam enters a region where there is a strong, uniform magnetic field. The direction of the magnetic field is out of the page.

On Fig. 10.1, mark and label the paths through the magnetic field of:

(i) α-particles (label this path α) [1]

(ii) β-particles (label this path β) [2]

(iii) γ-rays (label this path γ). [1]

(b) Radioactive sources have many uses in medicine.

View solution

State **two** safety precautions which hospital staff take when working with γ-ray sources.

1. .....

2. ..... [2]

(c) The radioactive isotope iodine-131 is used as a tracer in medical diagnosis. A nucleus of iodine-131 contains 53 protons and 78 neutrons. The symbol for iodine is I.

View solution

(i) Use nuclide notation to show this isotope of iodine.

[1]

(ii) Iodine-131 emits γ-radiation. It has a half-life of 8 hours.

Explain why this emission and this half-life make iodine-131 a suitable material for a tracer in medical diagnosis.

.....

.....

.....

..... [2]

[Total: 9]

View solution

BLANK PAGE

Permission to reproduce items where third-party owned material protected by copyright is included has been sought and cleared where possible. Every reasonable effort has been made by the publisher (UCLES) to trace copyright holders, but if any items requiring clearance have unwittingly been included, the publisher will be pleased to make amends at the earliest possible opportunity.

To avoid the issue of disclosure of answer-related information to candidates, all copyright acknowledgements are reproduced online in the Cambridge Assessment International Education Copyright Acknowledgements Booklet. This is produced for each series of examinations and is freely available to download at www.cambridgeinternational.org after the live examination series.

Cambridge Assessment International Education is part of the Cambridge Assessment Group. Cambridge Assessment is the brand name of the University of Cambridge Local Examinations Syndicate (UCLES), which itself is a department of the University of Cambridge.

© UCLES 2021