Cambridge Assessment International Education

Cambridge IGCSE™

CANDIDATE NAME									
CENTRE NUMBER						CANDIDATE NUMBER				

PHYSICS **0625/52**

Paper 5 Practical Test **May/June 2021**

1 hour 15 minutes

You must answer on the question paper.

You will need: The materials and apparatus listed in the confidential instructions

INSTRUCTIONS

- Answer **all** questions.
- Use a black or dark blue pen. You may use an HB pencil for any diagrams or graphs.
- Write your name, centre number and candidate number in the boxes at the top of the page.
- Write your answer to each question in the space provided.
- Do **not** use an erasable pen or correction fluid.
- Do **not** write on any bar codes.
- You may use a calculator.
- You should show all your working and use appropriate units.

INFORMATION

- The total mark for this paper is 40.
- The number of marks for each question or part question is shown in brackets [ ].

For Examiner's Use	
1	
2	
3	
4	
Total	

This document has **12** pages. Any blank pages are indicated.

© UCLES 2021

1 In this experiment, you will determine the density of sand.

Carry out the following instructions, referring to Fig. 1.1.

The beaker labelled A has a mark at the 250 cm^3 level.

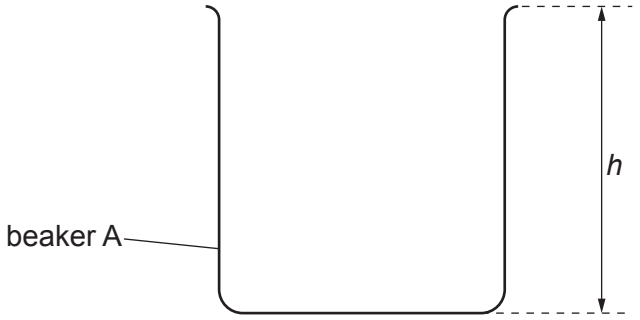

Fig. 1.1 (not to scale)

(a) Estimate the volume of water V_W that beaker A would hold when filled to the top.

View solution

V_W = ... cm^3 [1]

(b) (i) Use the string and the metre rule provided to accurately determine the circumference c of beaker A.

Record your readings and show your working.

View solution

c = ... cm [2]

(ii) Explain briefly how you used the string and the metre rule to determine c as accurately as possible. You may draw a diagram.

View solution

.....

.....

.....

..... [2]

(c) Measure the height h of beaker A, as shown in Fig. 1.1.

View solution

h ..... cm

Calculate the volume V_A of beaker A using the equation

$$V_A = \frac{hc^2}{12.6}.$$

V_A = ... cm^3 [2]

(d) (i) Beaker B contains dry sand. Pour the sand into the measuring cylinder.

View solution

- Record the volume V_S of sand.

V_S = ... cm^3

- Write down the mass m_B of beaker B, given on the card.

m_B = ... g

- Pour the sand into beaker B. Measure the mass m of beaker B containing the sand.

m = ... g

- Calculate the mass m_S of sand in the beaker. Use the equation $m_S = (m - m_B)$.

m_S = ... g
[2]

(ii) Calculate the density ρ of sand using the equation

View solution

$$\rho = \frac{m_S}{V_S}.$$

Include the unit.

ρ = ... [2]

[Total: 11]

© UCLES 2021

2 In this experiment, you will investigate the position of the image in a plane mirror.

Carry out the following instructions. Use the ray-trace sheet supplied, referring to Fig. 2.1 for guidance.

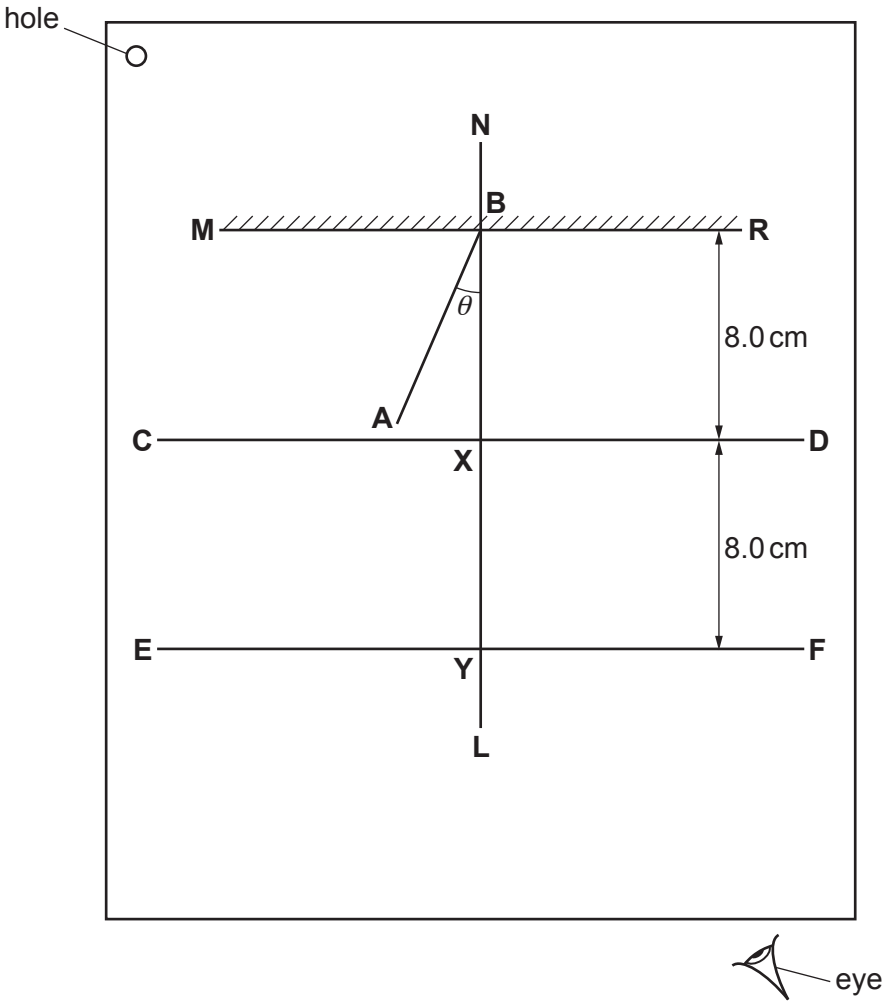

Fig. 2.1

(a) • Draw a line 10 cm long near the top of the ray-trace sheet. Label the line **MR**. Draw a normal to this line that passes through its centre. Label the normal **NL**. Label the point at which **NL** crosses **MR** with the letter **B**.

View solution

• Draw a line **CD** 8.0 cm below **MR** and parallel to **MR**.

• Label the point **X** where **CD** crosses **NL**.

• Draw a line **EF** 8.0 cm below **CD** and parallel to **CD**.

• Label the point **Y** where **EF** crosses **NL**.

[2]

© UCLES 2021

(b) • Draw a line 7.0 cm long from **B** at an angle of incidence $\theta_1 = 20°$ to the normal below **MR** and to the left of the normal. Label the end of this line **A**.

• Place two pins, P_1 and P_2, on line **AB** at a suitable distance apart for this type of ray-trace experiment.

View solution

[2]

(c) Place the reflecting face of the mirror vertically on the line **MR**.

View solution

View the images of pins P_1 and P_2 from the direction indicated by the eye in Fig. 2.1. Place pin P_3 on line **CD** so that the images of P_2 and P_1 appear exactly behind pin P_3. Label the position of P_3.

Place pin P_4 on line **EF** so that pin P_3, and the images of P_2 and P_1, all appear exactly behind pin P_4. Label the position of P_4.

[1]

(d) **(i)** Measure and record the distance *a* from **X** to P_3.

View solution

a = ... [1]

(ii) Measure and record the distance *b* from **Y** to P_4.

View solution

b = ... [1]

(iii) Calculate $\frac{a}{b}$.

View solution

$\frac{a}{b}$ = ... [1]

(e) • Repeat the steps in parts **(b)** and **(c)** using an angle of incidence $\theta_2 = 10°$.

View solution

• Measure and record the distance *c* from **X** to P_3.

c = ...

• Measure and record the distance *d* from **Y** to P_4.

d = ...

• Calculate $\frac{c}{d}$.

$\frac{c}{d}$ = ...
[1]

© UCLES 2021

(f) State and explain whether the values of $\frac{a}{b}$ and $\frac{c}{d}$ can be considered to be equal in this experiment.

.....

..... [1]

(g) A student carries out this experiment with care. Suggest a practical reason why the results may **not** be accurate.

.....

..... [1]

Tie your ray-trace sheet into this booklet between pages 4 and 5.

[Total: 11]

View solution

BLANK PAGE

3 In this experiment, you will investigate resistance.

Carry out the following instructions, referring to Fig. 3.1.

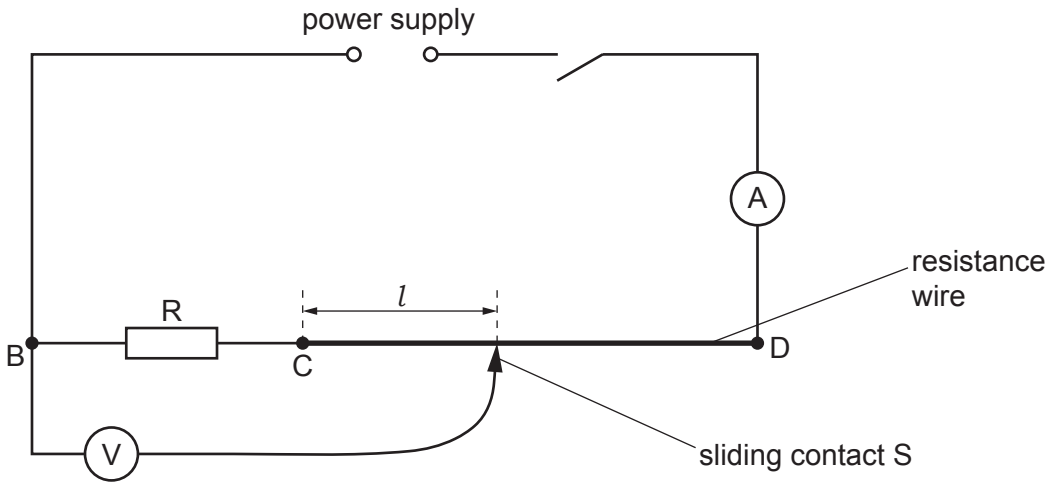

Fig. 3.1

(a) (i) Close the switch.

Measure the current I in the circuit.

I = ... [1]

(ii) Place the sliding contact S at C.

Measure the potential difference (p.d.) V_R across the resistor R.

V_R = ... [1]

Open the switch.

(iii) Calculate the resistance R of the resistor using the equation $R = \frac{V_R}{I}$.

R = ... [2]

(b) Disconnect the voltmeter from terminal B. Connect the voltmeter to terminal C. Close the switch.

- Place the sliding contact S at a distance l = 20.0 cm from C.
- Measure, and record in Table 3.1, the reading on the voltmeter.
- Repeat the procedure using l = 40.0 cm, 60.0 cm, 80.0 cm and 100.0 cm. Open the switch.

Table 3.1

l / cm	V / V
20.0	
40.0	
60.0	
80.0	
100.0	

[1]

(c) Plot a graph of V / V (y-axis) against l / cm (x-axis). Start both axes at the origin (0,0).

View solution

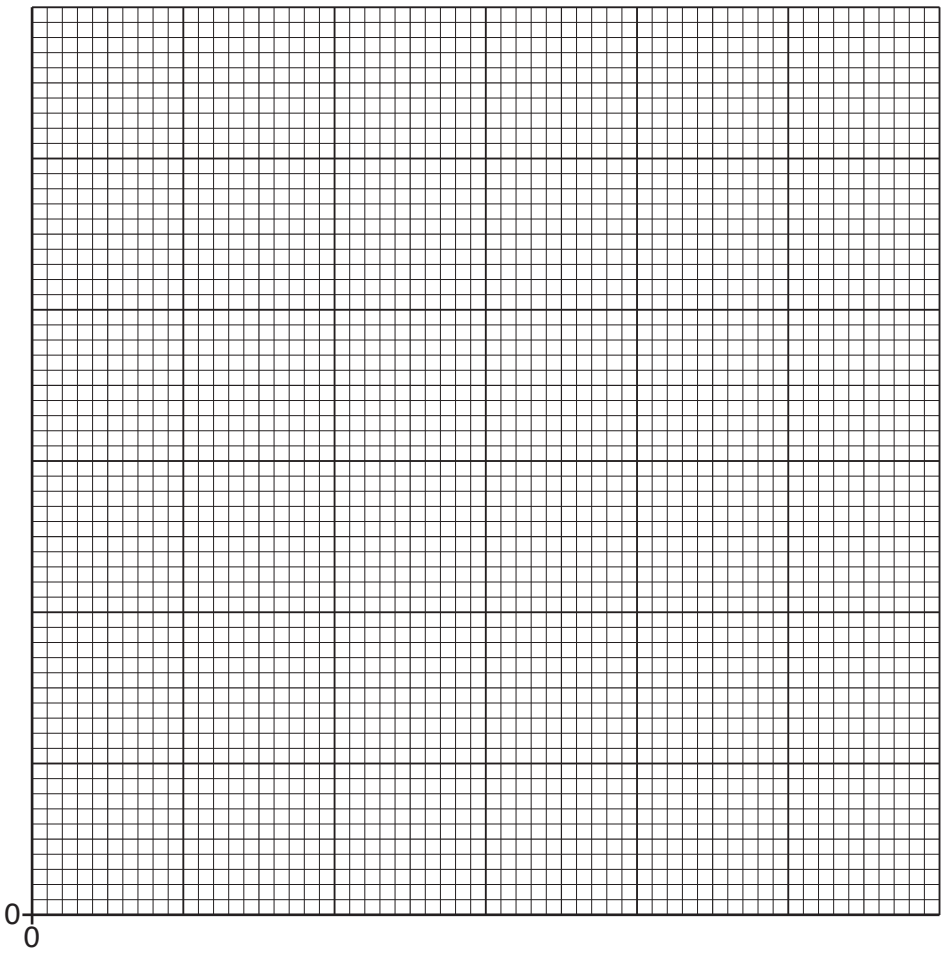

[4]

(d) Use your value of V_R from **(a)(ii)** to find the length l_R of resistance wire that has the same resistance as resistor R. Show clearly on the graph how you obtained the necessary information.

View solution

l_R = ... cm

[2]

[Total: 11]

© UCLES 2021

4 A student investigates springs made from different metals.

View solution

Plan an experiment to investigate the extension of springs made from different metals.

You are **not** required to carry out this experiment.

The following apparatus is available:

boss, clamp and stand
metre rule
springs made from different metals
selection of loads with hangers.

You can also use other apparatus and materials that are usually available in a school laboratory.

In your plan, you should:

- write a list of suitable metals for the springs
- draw a diagram of the set up you would use
- explain briefly how to carry out the investigation
- state the key variables to keep constant
- draw a table, or tables, with column headings, to show how to display your readings (you are **not** required to enter any readings in the table)
- explain how you would use the readings to reach a conclusion.

.....

.....

.....

.....

© UCLES 2021

.....

.....

.....

.....

.....

.....

.....

.....

.....

.....

.....

.....

.....

.....

..... [7]

BLANK PAGE

Permission to reproduce items where third-party owned material protected by copyright is included has been sought and cleared where possible. Every reasonable effort has been made by the publisher (UCLES) to trace copyright holders, but if any items requiring clearance have unwittingly been included, the publisher will be pleased to make amends at the earliest possible opportunity.

To avoid the issue of disclosure of answer-related information to candidates, all copyright acknowledgements are reproduced online in the Cambridge Assessment International Education Copyright Acknowledgements Booklet. This is produced for each series of examinations and is freely available to download at www.cambridgeinternational.org after the live examination series.

Cambridge Assessment International Education is part of the Cambridge Assessment Group. Cambridge Assessment is the brand name of the University of Cambridge Local Examinations Syndicate (UCLES), which itself is a department of the University of Cambridge.

© UCLES 2021