Cambridge Assessment International Education

Cambridge IGCSE™

CANDIDATE NAME									
CENTRE NUMBER						CANDIDATE NUMBER				

PHYSICS **0625/53**

Paper 5 Practical Test **May/June 2021**

1 hour 15 minutes

You must answer on the question paper.

You will need: The materials and apparatus listed in the confidential instructions

INSTRUCTIONS

- Answer **all** questions.
- Use a black or dark blue pen. You may use an HB pencil for any diagrams or graphs.
- Write your name, centre number and candidate number in the boxes at the top of the page.
- Write your answer to each question in the space provided.
- Do **not** use an erasable pen or correction fluid.
- Do **not** write on any bar codes.
- You may use a calculator.
- You should show all your working and use appropriate units.

INFORMATION

- The total mark for this paper is 40.
- The number of marks for each question or part question is shown in brackets [ ].

For Examiner's Use	
1	
2	
3	
4	
Total	

This document has **16** pages. Any blank pages are indicated.

© UCLES 2021

1 In this experiment, you will investigate the behaviour of a spring and use it to determine the density of modelling clay.

A stand and spring have been set up for you.

Carry out the following instructions, referring to Fig. 1.1 and Fig. 1.2.

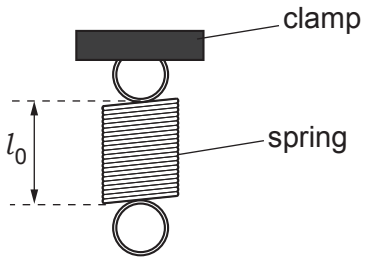

Fig. 1.1

(a) Measure the length l_0 of the spring without any load.

View solution

l_0 = ... cm [1]

(b) Suspend a load of weight W = 2.0 N from the spring, as shown in Fig. 1.2.

View solution

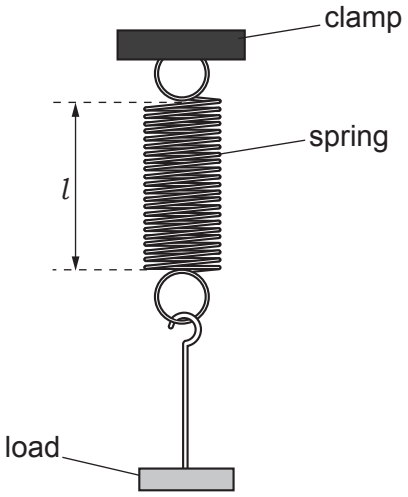

Fig. 1.2

(i) Measure the stretched length l of the spring.

l = ... cm [1]

(ii) Calculate the extension e of the spring for a load of weight W = 2.0 N.
Use your values from **(a)** and **(b)(i)** and the equation $e = (l - l_0)$.

View solution

e = ... cm [1]

© UCLES 2021

(c) Remove the load from the spring.

View solution

Suspend the load U, which is made of modelling clay, from the spring.

Measure the stretched length l_U of the spring.

l_U = ... cm

Calculate the extension e_U of the spring with load U.

e_U = ... cm

The extension of a spring is directly proportional to the weight of the load.

Use your values of W and e from **(b)(ii)** and your value of e_U to determine the weight W_U of load U.
Show your working.

W_U = ...
[2]

(d) Fully immerse load U in the beaker of water, as shown in Fig. 1.3. The load U must **not** touch either the sides or the bottom of the beaker.

View solution

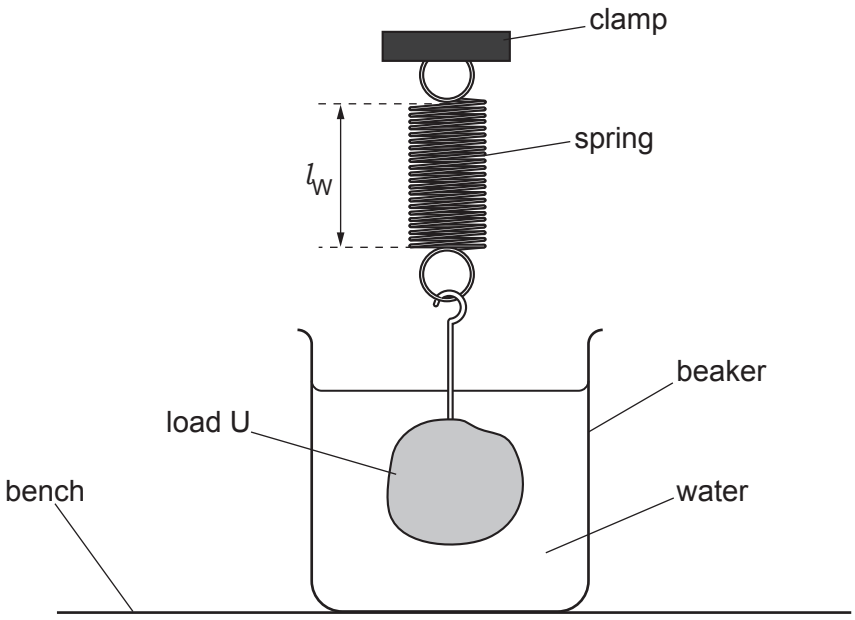

Fig. 1.3

Measure the stretched length l_W of the spring.

l_W = ... cm

Calculate the extension e_W of the spring with load U in the water.

e_W = ... cm

Calculate the density ρ of the modelling clay.
Use your value of e_U from **(c)**, your value of e_W and the equation

$$\rho = \frac{e_U}{(e_U - e_W)} \times k \text{ , where } k = 1.0\,\text{g/cm}^3.$$

ρ = ... g/cm^3
[2]

(e) Suggest a possible source of inaccuracy in the determination of ρ in this experiment.

View solution

.....

.....

..... [1]

(f) Describe **one** precaution that you took when measuring the length of the spring, to ensure an accurate reading. You may draw a diagram.

View solution

.....

..... [1]

(g) A student plots a graph of load against extension for the spring, to show that the two quantities are directly proportional.

State how his graph line shows that load and extension are directly proportional.

View solution

.....

.....

.....

[2]

[Total: 11]

2 In this experiment, you will determine the electromotive force (e.m.f.) and resistance of a cell by using a resistance wire.

The circuit has been set up for you.

Carry out the following instructions, referring to Fig. 2.1.

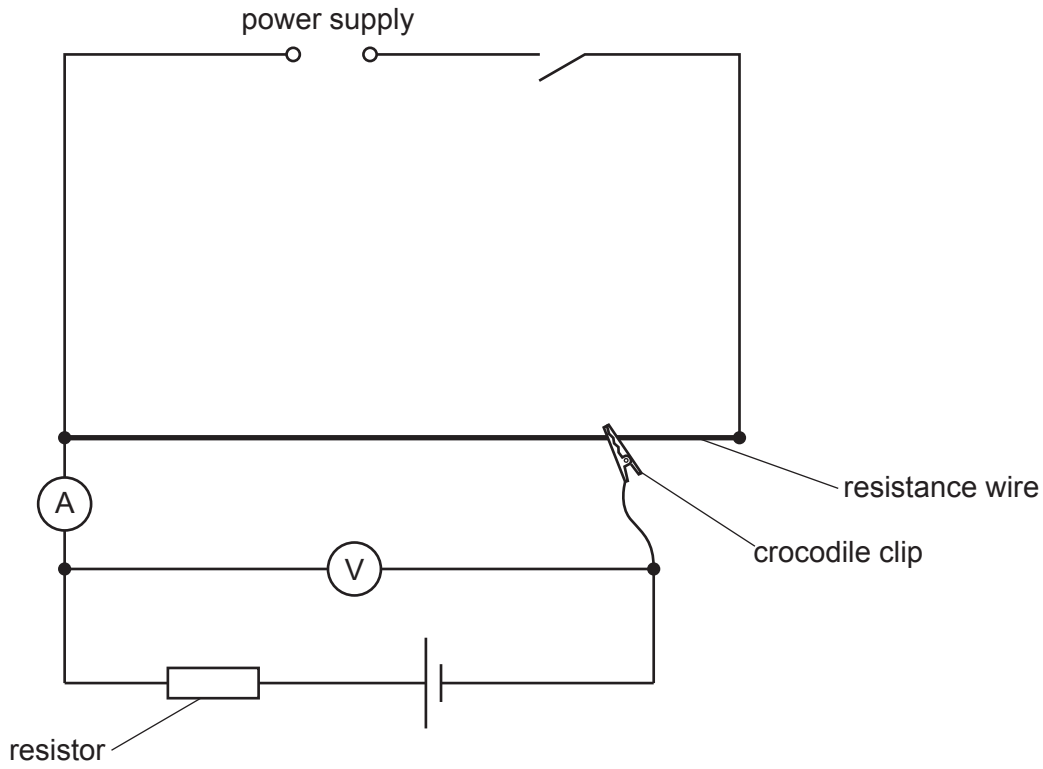

Fig. 2.1

(a) Close the switch.

Attach the crocodile clip to the resistance wire. Adjust its position until the value V of the potential difference (p.d.) across the cell and the resistor is 5.0 V.

Measure, and record in Table 2.1, the value of the current I for the cell and resistor in series.

Repeat this procedure for values of V = 4.5 V, 4.0 V, 3.5 V and 3.0 V. Detach the crocodile clip from the resistance wire.

Open the switch.

View solution

Table 2.1

V/V	I/A
5.0	
4.5	
4.0	
3.5	
3.0	

[2]

© UCLES 2021

(b) Plot a graph of I/A (y-axis) against V/V (x-axis). Start both axes at the origin (0,0).

View solution

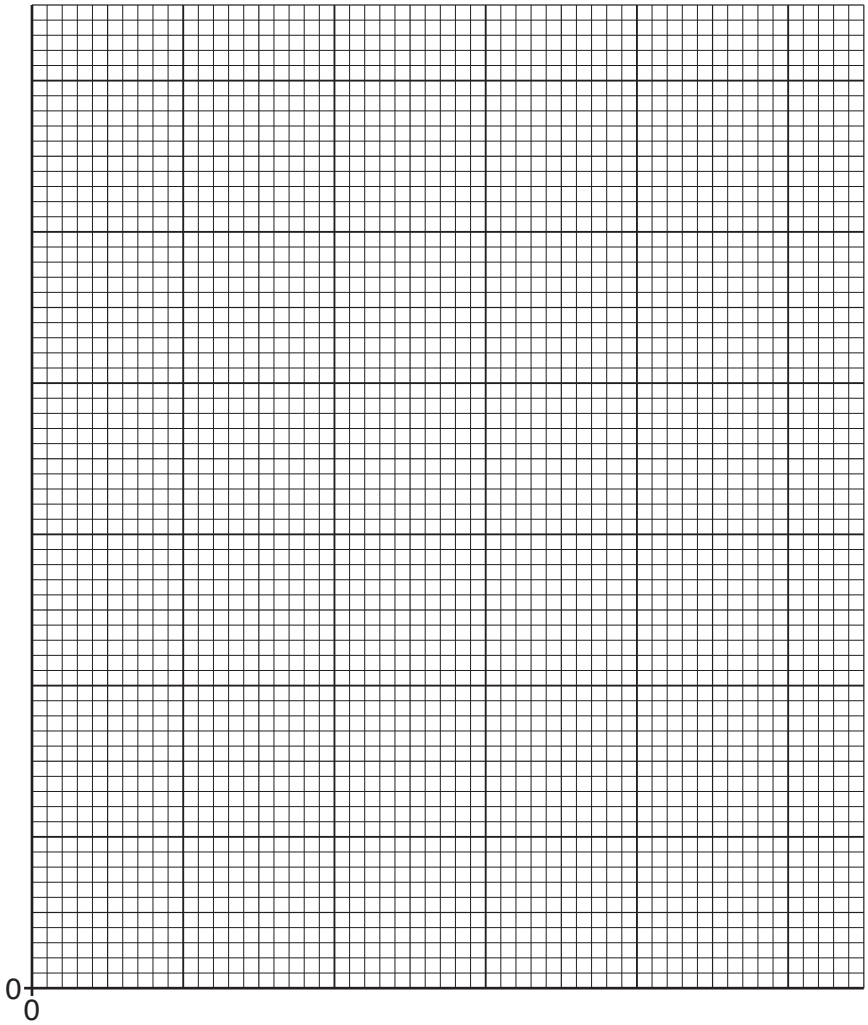

[4]

(c) The e.m.f. E of the cell is equal to the value of V when I = 0.0A.

View solution

Determine the value of E from the graph.

E = ... [1]

(d) **(i)** Determine the gradient G of the graph. Show clearly on the graph how you obtained the necessary information.

View solution

G = ... [1]

(ii) The value of $\frac{1}{G}$ is numerically equal to the resistance $(r + R)$ where r is the resistance of the cell and $R = 5.0\,\Omega$.

Calculate the resistance r of the cell.

View solution

r = ... Ω [1]

(e) Suggest how the experiment and graph could be improved to obtain a more accurate value for e.m.f. E.

.....

.....

..... [2]

[Total: 11]

View solution

BLANK PAGE

3 In this experiment, you will investigate the refraction of light by a transparent block.
You will determine a quantity known as the refractive index of the material of the block.

Carry out the following instructions, using the separate ray-trace sheet provided. You may refer to Fig. 3.1 for guidance.

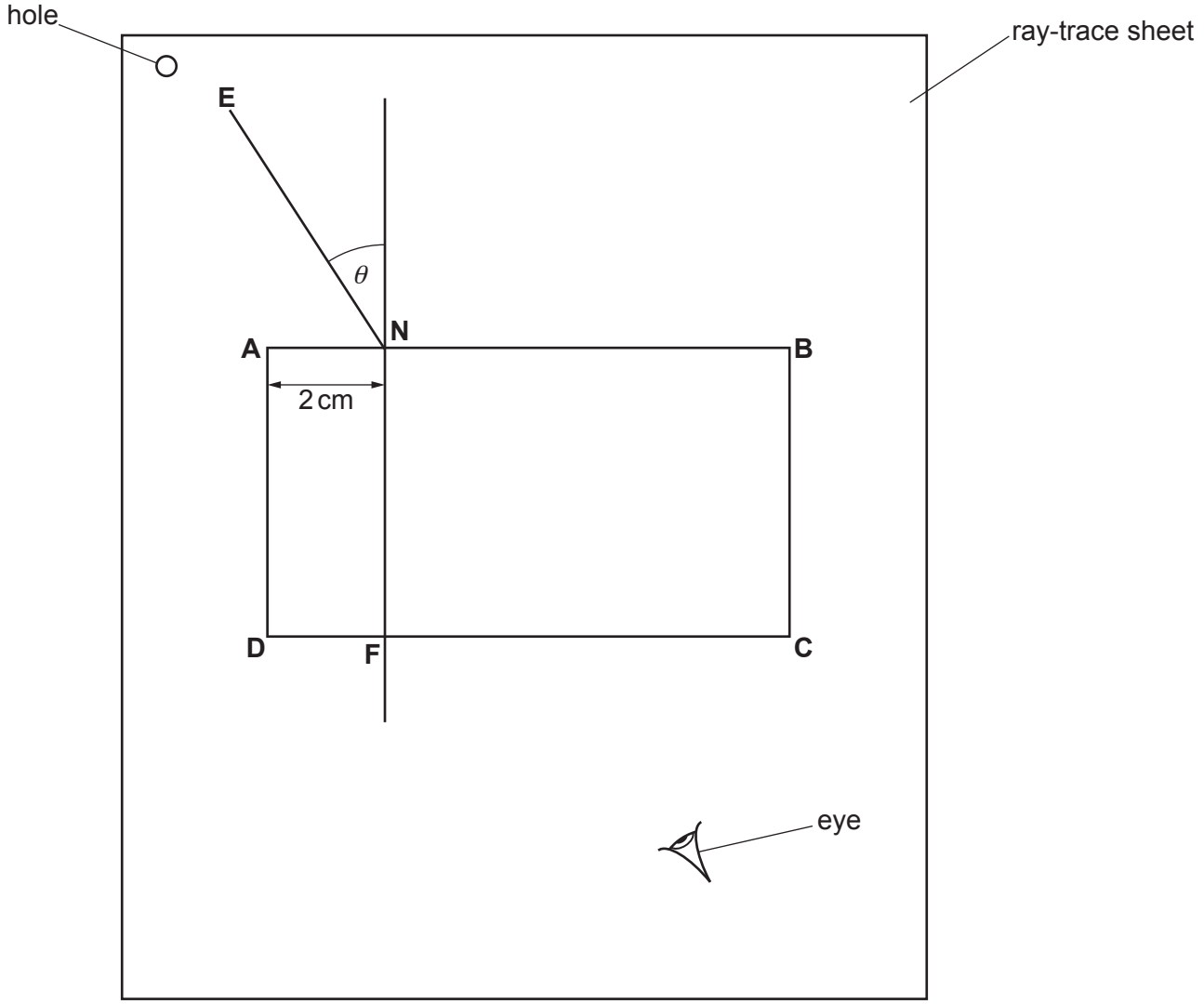

Fig. 3.1

(a)
- Place the block approximately in the centre of the ray-trace sheet. Carefully draw round the block and label the corners **ABCD** as indicated by Fig. 3.1.
- Remove the block from the ray-trace sheet.
- Draw a normal to line **AB** at a point **N**, 2 cm from **A**. Extend the normal downwards until it crosses the line **CD**. Label the point at which it crosses **CD** with the letter **F**.
- Draw a line **NE**, as indicated by Fig. 3.1, 8 cm long and at an angle $\theta_1 = 20°$.

[1]

View solution

(b)
- Replace the block in exactly the same position as in **(a)**.
- Place two pins, P_1 and P_2, on line **NE**, a suitable distance apart for accurate ray tracing.
- Label the positions of P_1 and P_2.
- View the images of P_1 and P_2 through the block from the direction indicated by the eye in Fig. 3.1. Place two pins, P_3 and P_4, a suitable distance apart, so that pins P_3 and P_4, and the images of P_1 and P_2, all appear exactly one behind the other.
- Label the positions of P_3 and P_4.
- Remove the block and pins from the ray-trace sheet.
- Draw a line joining P_3 and P_4. Extend this line until it meets **NF**.
- Label the point at which this line meets **NF** with the letter **G**. Label the point at which this line crosses **CD** with the letter **H**.
- Draw a line joining points **N** and **H**.

View solution

[3]

(c) Measure the length *a* of line **NH**.

View solution

a = ... cm

Measure the length *b* of line **GH**.

b = ... cm

Calculate a value n_1 for the refractive index, using the equation $n_1 = \frac{a}{b}$.

n_1 = ...

[2]

(d) Draw a new line **NE**, as indicated by Fig. 3.1, 8 cm long and at an angle $\theta_2 = 40°$.

View solution

Repeat the steps in **(b)**.

(i) Measure the length *c* of the new line **NH**.

c = ... cm

Measure the length *d* of the new line **GH**.

d = ... cm

Calculate a second value n_2 for the refractive index, using the equation $n_2 = \frac{c}{d}$.

n_2 = ...

[1]

© UCLES 2021

(ii) State whether n_1 or n_2 is likely to be the more accurate value.
Explain your answer.

View solution

statement .....

explanation .....

.....

[1]

(e) (i) Measure the angle α, where α is the smaller angle between the line **GH** from **(b)** and the line **GH** from **(d)**.

View solution

α = ...

[1]

(ii) A student suggests that the angle α should be equal to the difference between the angle θ_2 from **(d)** and the angle θ_1 from **(a)**.

State whether your results support this suggestion. Justify your answer by reference to your results.

statement .....

justification .....

.....

[1]

(f) Suggest why different students, all carrying out this experiment carefully, may **not** obtain identical results.

.....

..... [1]

Tie your ray-trace sheet into this booklet between pages 10 and 11.

View solution

[Total: 11]

© UCLES 2021

BLANK PAGE

4 A student investigates the factors affecting the deflection of a wooden strip clamped at one end.

Plan an experiment which enables him to investigate how **one** factor affects the distance *D* that the free end of the wooden strip moves downwards when loads are placed on it.

View solution

You are **not** required to carry out the experiment.

The apparatus available includes:

a variety of wooden strips that can be clamped as shown in Fig. 4.1
a set of masses with a hanger.

In your plan, you should:

- list any additional apparatus needed
- state the key variables to be kept constant
- explain briefly how to carry out the experiment, including how *D* is to be measured and any precautions that must be taken to ensure reliable results
- draw a table, with column headings, to show how to display the readings (you are **not** required to enter any readings in the table)
- explain how to use the readings to reach a conclusion.

You may add to Fig. 4.1 or draw another diagram if it helps to explain your plan.

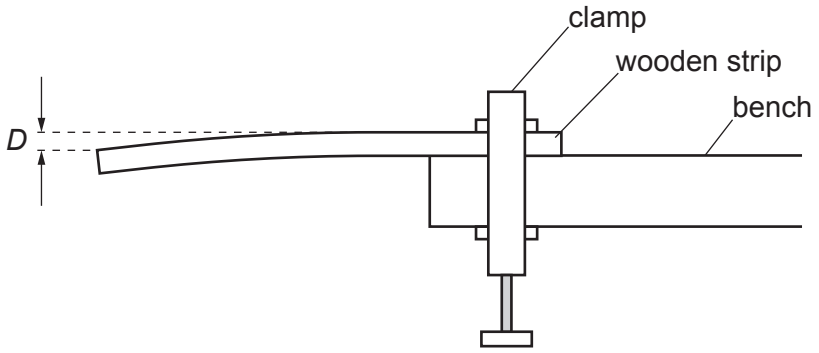

Fig. 4.1

.....

.....

.....

BLANK PAGE

Permission to reproduce items where third-party owned material protected by copyright is included has been sought and cleared where possible. Every reasonable effort has been made by the publisher (UCLES) to trace copyright holders, but if any items requiring clearance have unwittingly been included, the publisher will be pleased to make amends at the earliest possible opportunity.

To avoid the issue of disclosure of answer-related information to candidates, all copyright acknowledgements are reproduced online in the Cambridge Assessment International Education Copyright Acknowledgements Booklet. This is produced for each series of examinations and is freely available to download at www.cambridgeinternational.org after the live examination series.

Cambridge Assessment International Education is part of the Cambridge Assessment Group. Cambridge Assessment is the brand name of the University of Cambridge Local Examinations Syndicate (UCLES), which itself is a department of the University of Cambridge.

© UCLES 2021