Cambridge Assessment International Education

Cambridge IGCSE™

CANDIDATE NAME									
CENTRE NUMBER						CANDIDATE NUMBER			

PHYSICS **0625/61**

Paper 6 Alternative to Practical **May/June 2021**

1 hour

You must answer on the question paper.

No additional materials are needed.

INSTRUCTIONS

- Answer **all** questions.
- Use a black or dark blue pen. You may use an HB pencil for any diagrams or graphs.
- Write your name, centre number and candidate number in the boxes at the top of the page.
- Write your answer to each question in the space provided.
- Do **not** use an erasable pen or correction fluid.
- Do **not** write on any bar codes.
- You may use a calculator.
- You should show all your working and use appropriate units.

INFORMATION

- The total mark for this paper is 40.
- The number of marks for each question or part question is shown in brackets [ ].

This document has **12** pages. Any blank pages are indicated.

© UCLES 2021

1 A student investigates the period of a pendulum. Fig. 1.1 and Fig. 1.2 show the arrangement.

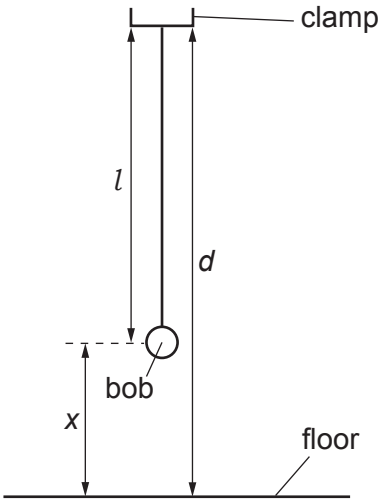

Fig. 1.1

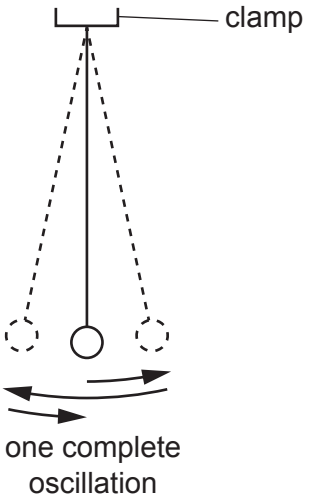

Fig. 1.2

View solution

(a) The student measures the distance *d* between the bottom of the clamp and the floor.

d = ... 120.0 cm .....

This distance *d* remains constant throughout the experiment.

He adjusts the length l of the pendulum to 70.0 cm.

Calculate the distance *x* between the centre of the pendulum bob and the floor. Record the value of *x* in the first row of Table 1.1. [1]

(b) The student displaces the bob slightly and releases it so that it swings. Fig. 1.2 shows one complete oscillation of the pendulum.

He measures, and records in the first row of Table 1.1, the time *t* for 10 complete oscillations.

(i) Calculate, and record in the first row of Table 1.1, the period *T* of the pendulum. The period is the time for one complete oscillation. [1]

(ii) Calculate, and record in the first row of Table 1.1, T^2. [2]

(iii) Complete the column headings in Table 1.1. [1]

View solution

Table 1.1

x/	t/	T/	T^2/
	16.7		
45.0	17.3	1.73	2.99
40.0	17.9	1.79	3.20
35.0	18.4	1.84	3.39
30.0	19.0	1.90	3.61

View solution

(c) He repeats the procedure using x = 45.0 cm, 40.0 cm, 35.0 cm and 30.0 cm.

He records the readings in Table 1.1.

Plot a graph of T^2 (y-axis) against x (x-axis). You do **not** need to start your axes at the origin (0,0).

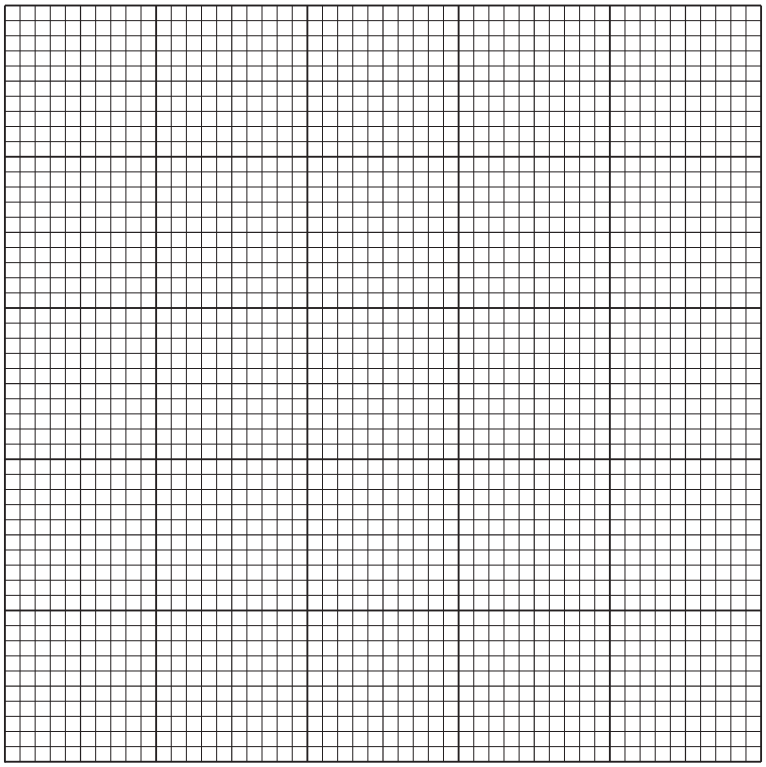

[4]

(d) State whether the graph line shows that T^2 is proportional to x. Give a reason for your answer.

statement .....

reason .....
[1]

(e) Explain why timing 10 oscillations gives a more accurate result for the period T than timing one oscillation.

.....

..... [1]

[Total: 11]

View solution

2 A student investigates resistance.

Fig. 2.1 shows the circuit she uses.

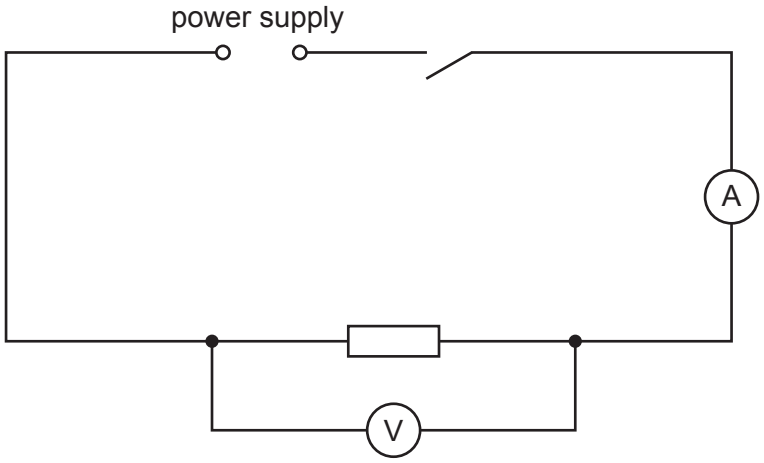

Fig. 2.1

(a) She records the potential difference (p.d.) V_1 across the resistor and the current I_1 in the circuit.

View solution

The meters are shown in Fig. 2.2 and Fig. 2.3.

(i) Write down the readings. Include the units for potential difference, current or resistance where appropriate in all parts of the question.

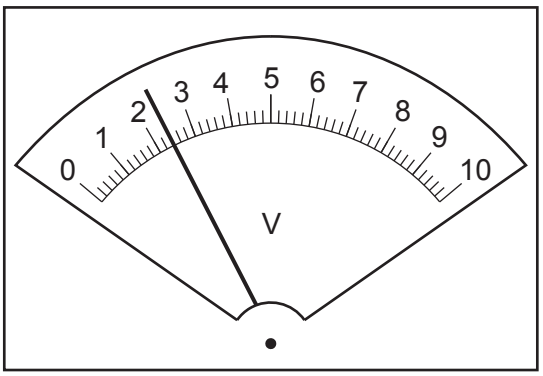

Fig. 2.2

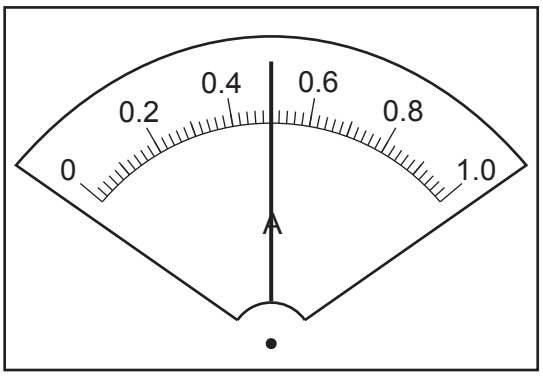

Fig. 2.3

V_1 = ...

I_1 = ...

[3]

(ii) Calculate the resistance R_1 of the resistor using the equation $R_1 = \frac{V_1}{I_1}$.

View solution

R_1 = ... [1]

(b) She connects a second resistor in series with the first resistor. She connects the voltmeter across both resistors and records the potential difference V_2 across both resistors and the current I_2 in the circuit.

View solution

V_2 = 2.6

I_2 = 0.28

Calculate the resistance R_S of the resistors in series using the equation $R_S = \frac{V_2}{I_2}$.

R_S = ... [1]

(c) She connects the second resistor in parallel with the first resistor. She connects the voltmeter across both resistors. She records the potential difference V_3 across the resistors and the current I_3 in the circuit.

View solution

V_3 = 2.4

I_3 = 0.99

Calculate the resistance R_P of the resistors in parallel using the equation $R_P = \frac{V_3}{I_3}$. Give your answer to a suitable number of significant figures for this experiment.

R_P = ... [1]

(d) Complete the circuit diagram to show the circuit she uses in part **(c)**.

View solution

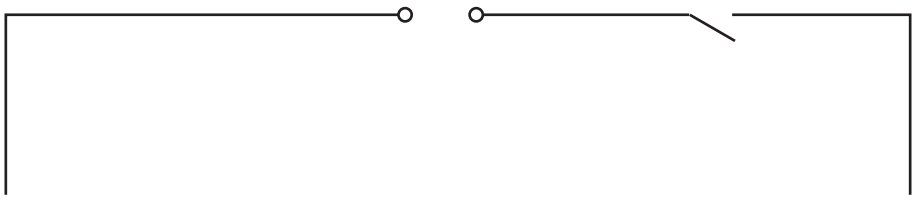

[2]

(e) Describe how to extend part **(c)** of this experiment to investigate the relationship between the combined resistance of identical resistors connected in parallel and the number of resistors.

.....

.....

.....

..... [2]

(f) In this type of electrical experiment, a variable resistor can be used to vary the current.

View solution

Draw the circuit symbol for a variable resistor.

[1]

[Total: 11]

3 A student investigates the refraction of light through a transparent block.

Fig. 3.1 shows the transparent block **ABCD** on the student's ray-trace sheet.

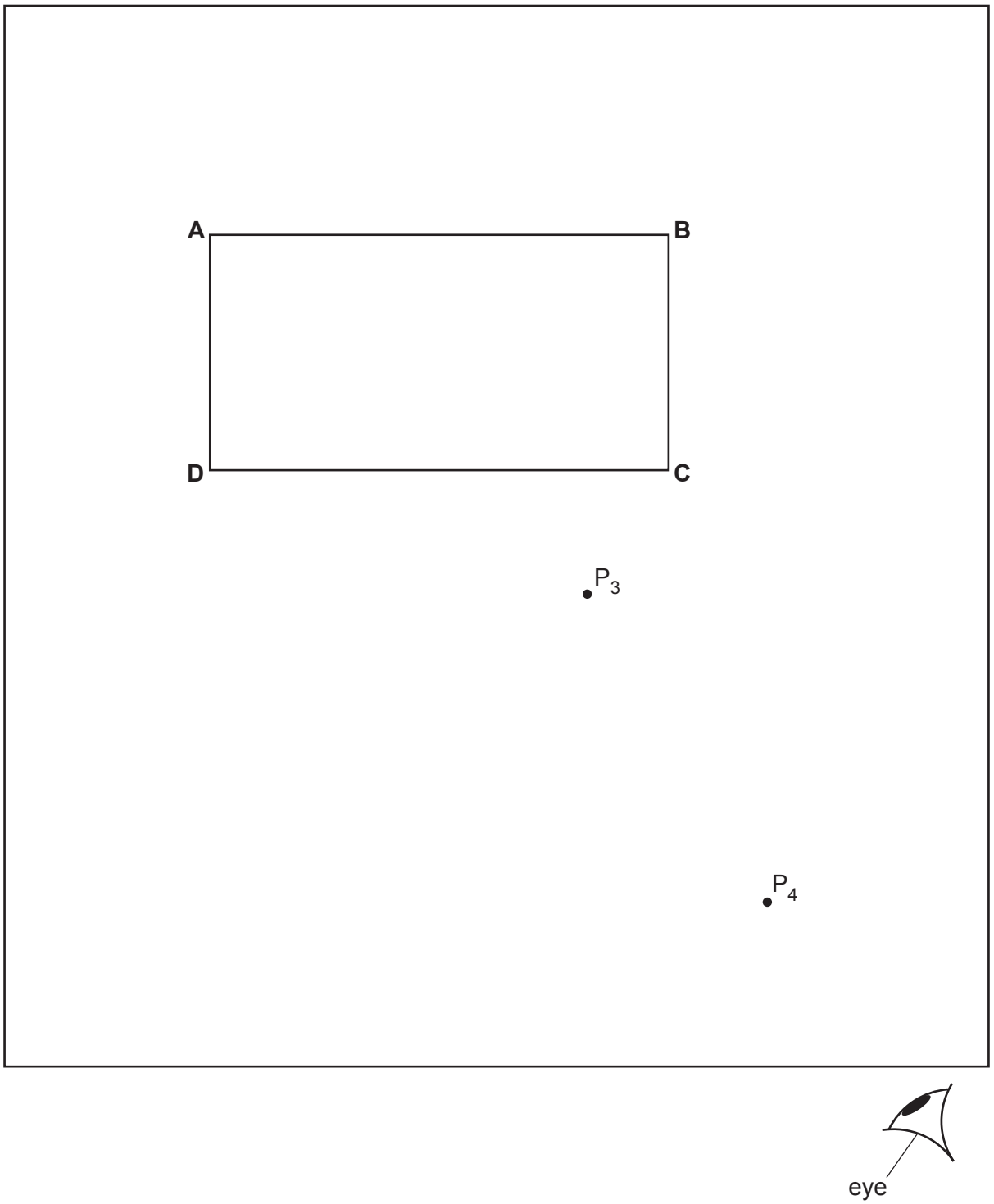

Fig. 3.1

(a) • Draw a normal at the centre of side **AB**. Continue the normal so that it reaches the bottom of the ray-trace sheet. Label the normal **NL**.

View solution

• Label the point **Q** where **NL** crosses **AB**.

[1]

(b)
- Draw a line **EF** parallel to **CD** and 2.0 cm below **CD**.
- Label the point **J** where **NL** crosses **EF**.
- Draw a line **GH** parallel to **CD** and 7.0 cm below **CD**.
- Label the point **K** where **NL** crosses **GH**.

[1]

(c) **(i)** Draw a line **PQ** at an angle $i = 30°$ to the normal and on the left-hand side of the normal above the block. [1]

(ii) The student places two pins P_1 and P_2 on line **PQ**. Fig. 3.1 is not drawn full size. Suggest a suitable distance apart for pins P_1 and P_2 in this type of experiment.

distance apart ..... [1]

(d) The student observes the images of P_1 and P_2 through side **CD** of the block. She adjusts her line of sight until the images of P_1 and P_2 appear one behind the other.
She places a pin P_3 on line **EF** and a pin P_4 on line **GH** so that P_3, and the images of P_1 and P_2 seen through the block, appear behind pin P_4.

(i) On Fig. 3.1, measure the length a of the line from **J** to P_3.

a = ... [1]

(ii) On Fig. 3.1, measure the length b of the line from **K** to P_4.

b = ... [1]

(iii) Calculate $\frac{b}{a}$.

$\frac{b}{a}$ = ... [2]

(e) State **one** precaution that you would take in this type of experiment in order to produce an accurate ray trace.

.....

..... [1]

(f) A student plans to test the suggestion that, in this experiment, $\frac{b}{a}$ is a constant for all possible values of i. List suitable values of i that the student could use.

..... [2]

[Total: 11]

4 A student investigates the rate of cooling, in air, of heated blocks made of different metals. The temperature of each block is increased by placing it in hot water.

Plan an experiment to investigate how the rate of cooling depends on the metal from which each block is made.

View solution

The following apparatus is available to the student:

cylindrical blocks of different metals, each with a hole for a thermometer, as shown in Fig. 4.1
a thermometer.

Other apparatus normally available in a school laboratory can also be used.

In your plan, you should:

- list any additional apparatus required
- explain briefly how you would carry out the investigation, including the measurements you would take
- state the key variables to be kept constant
- draw a suitable table, with column headings, to show how you would display your readings (you are **not** required to enter any readings in the table)
- explain how you would use the results to reach a conclusion.

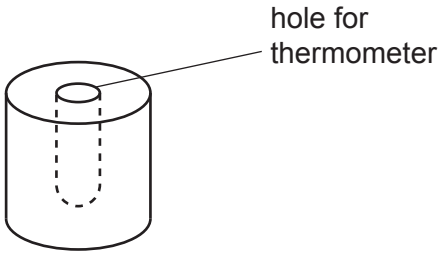

Fig. 4.1

.....

.....

.....

.....

.....

.....

.....

.....

.....

.....

.....

.....

.....

.....

.....

..... [7]

BLANK PAGE

Permission to reproduce items where third-party owned material protected by copyright is included has been sought and cleared where possible. Every reasonable effort has been made by the publisher (UCLES) to trace copyright holders, but if any items requiring clearance have unwittingly been included, the publisher will be pleased to make amends at the earliest possible opportunity.

To avoid the issue of disclosure of answer-related information to candidates, all copyright acknowledgements are reproduced online in the Cambridge Assessment International Education Copyright Acknowledgements Booklet. This is produced for each series of examinations and is freely available to download at www.cambridgeinternational.org after the live examination series.

Cambridge Assessment International Education is part of the Cambridge Assessment Group. Cambridge Assessment is the brand name of the University of Cambridge Local Examinations Syndicate (UCLES), which itself is a department of the University of Cambridge.

© UCLES 2021