Cambridge Assessment International Education

Cambridge IGCSE™

CANDIDATE NAME									
CENTRE NUMBER						CANDIDATE NUMBER			

PHYSICS **0625/62**

Paper 6 Alternative to Practical **May/June 2021**

1 hour

You must answer on the question paper.

No additional materials are needed.

INSTRUCTIONS

- Answer **all** questions.
- Use a black or dark blue pen. You may use an HB pencil for any diagrams or graphs.
- Write your name, centre number and candidate number in the boxes at the top of the page.
- Write your answer to each question in the space provided.
- Do **not** use an erasable pen or correction fluid.
- Do **not** write on any bar codes.
- You may use a calculator.
- You should show all your working and use appropriate units.

INFORMATION

- The total mark for this paper is 40.
- The number of marks for each question or part question is shown in brackets [ ].

This document has **12** pages. Any blank pages are indicated.

© UCLES 2021

1 A student determines the density of sand.

Fig. 1.1 shows a beaker with a mark at the 250 cm^3 level.

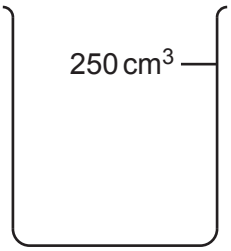

Fig. 1.1

(a) Estimate the volume of water V_W that the beaker would hold when filled to the top. View solution

V_W = ... cm^3 [1]

(b) The student uses string and a metre rule to determine the circumference c of the beaker. View solution

c = 21.3 cm

Explain briefly how to use the string and the metre rule to determine the circumference c as accurately as possible. You may draw a diagram.

.....

.....

.....

..... [2]

(c) The student measures the height h of the beaker.

(i) Show clearly on Fig. 1.1, the height h that he should measure. [1]

His reading is h = 9.0 cm

(ii) Calculate the external volume V_B of the beaker using the equation View solution

$$V_B = \frac{hc^2}{12.6}.$$

V_B = ... cm^3 [2]

(d) The student measures the mass of the beaker on a balance, as shown in Fig. 1.2.

View solution

(i) Write down the mass m_B of the beaker, to the nearest gram.

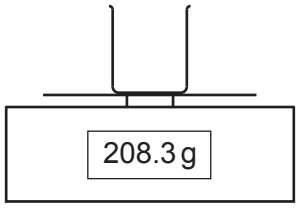

Fig. 1.2

m_B = ... g [1]

The student fills the beaker to the top with dry sand. He measures the mass m of the beaker containing the sand.

m = 724 g

(ii) Calculate the mass m_S of sand in the beaker. Use the equation $m_S = (m - m_B)$.

View solution

m_S = ... g [1]

(iii) Calculate the density ρ of the sand using the equation

$$\rho = \frac{m_S}{V_B}.$$

View solution

Include the unit.

ρ = ... [2]

(e) The student uses a measuring cylinder to measure the volume of dry sand. Draw a diagram of the measuring cylinder and show the line of sight that the student must use to obtain an accurate volume reading.

View solution

[1]

[Total: 11]

© UCLES 2021

2 A student investigates the position of the image in a plane mirror.

Fig. 2.1 shows the ray-trace sheet that the student uses.

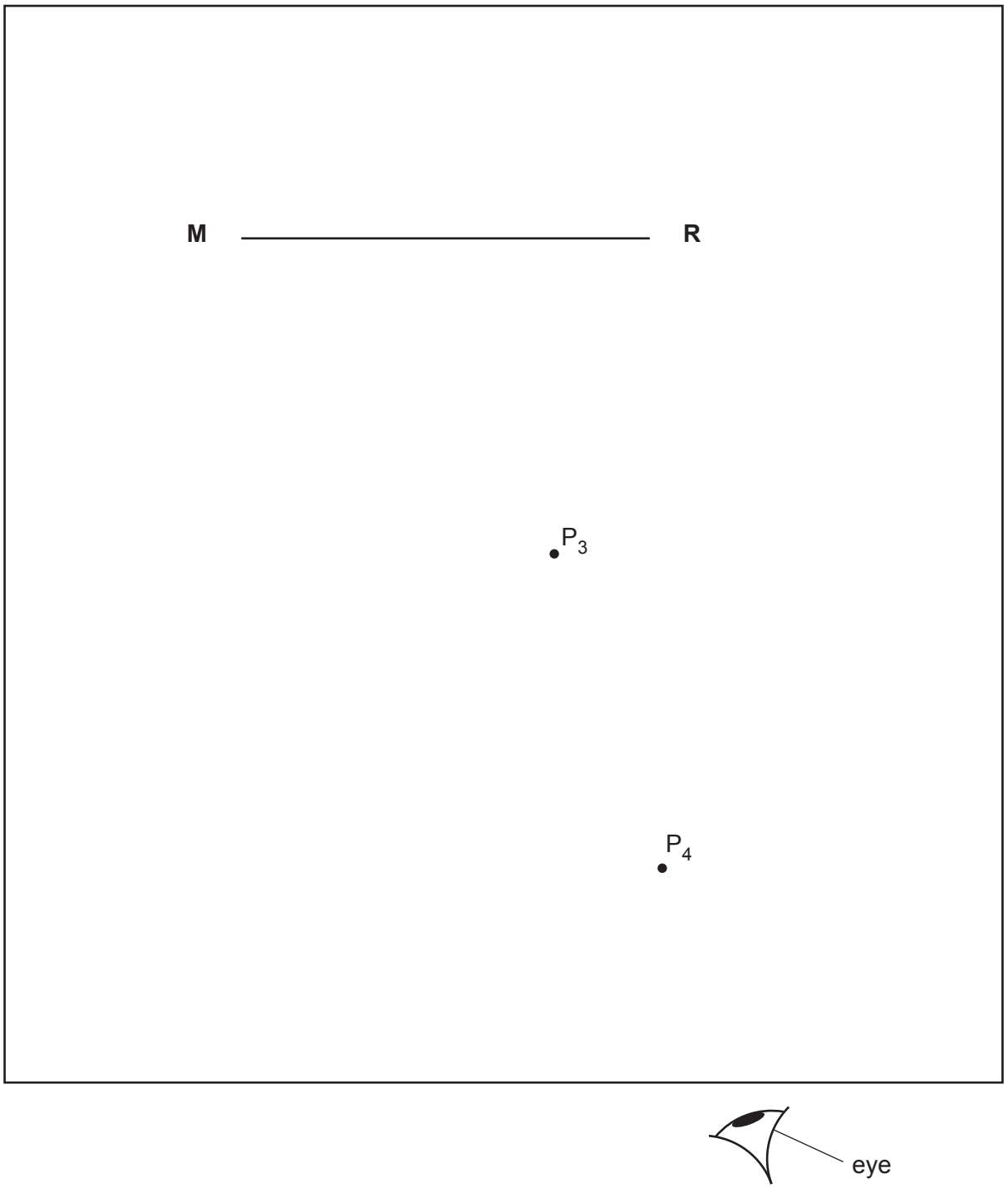

Fig. 2.1

(a)
- The line **MR** shows the position of a plane mirror. Draw a normal to this line that passes through its centre. Continue the normal so that it reaches the bottom of the ray-trace sheet. Label the normal **NL**. Label the point at which **NL** crosses **MR** with the letter **B**.
- Draw a line **CD** 5.0 cm below **MR** and parallel to **MR**.
- Label the point **X** where **CD** crosses **NL**.
- Draw a line **EF** 5.0 cm below **CD** and parallel to **CD**.
- Label the point **Y** where **EF** crosses **NL**.

View solution

[2]

(b) Draw a line 7.0 cm long from **B** at an angle of incidence $\theta_1 = 20°$ to the normal below **MR** and to the left of the normal. Label the end of this line **A**. [1]

(c) The student places two pins, P_1 and P_2, on line **AB**. Suggest a suitable distance x between the pins for this type of ray-trace experiment.

View solution

x = ... [1]

(d) The student views the images of pins P_1 and P_2 from the direction indicated by the eye in Fig. 2.1. She places pin P_3 on line **CD** so that the images of P_2 and P_1 appear exactly behind pin P_3.

She places pin P_4 on line **EF** so that pin P_3, and the images of P_2 and P_1, all appear exactly behind pin P_4. The positions of P_3 and P_4 are shown on Fig. 2.1.

(i) Measure and record the distance a from **X** to P_3.

View solution

a = ... [1]

(ii) Measure and record the distance b from **Y** to P_4.

View solution

b = ... [1]

(iii) Calculate $\frac{a}{b}$.

$\frac{a}{b}$ = ... [1]

View solution

(e) The student repeats the procedure using an angle of incidence $\theta_2 = 40°$. She records the new values of a and b.

a = 4.2 cm

b = 8.3 cm

Calculate the new value $\frac{a}{b}$.

View solution

$\frac{a}{b}$ = ... [2]

(f) State and explain whether the two values of $\frac{a}{b}$ can be considered to be equal in this experiment.

.....

..... [1]

(g) A student carries out this experiment with care. Suggest a practical reason why the results may **not** be accurate.

.....

..... [1]

[Total: 11]

View solution

3 A student investigates resistance.

Fig. 3.1 shows the circuit used.

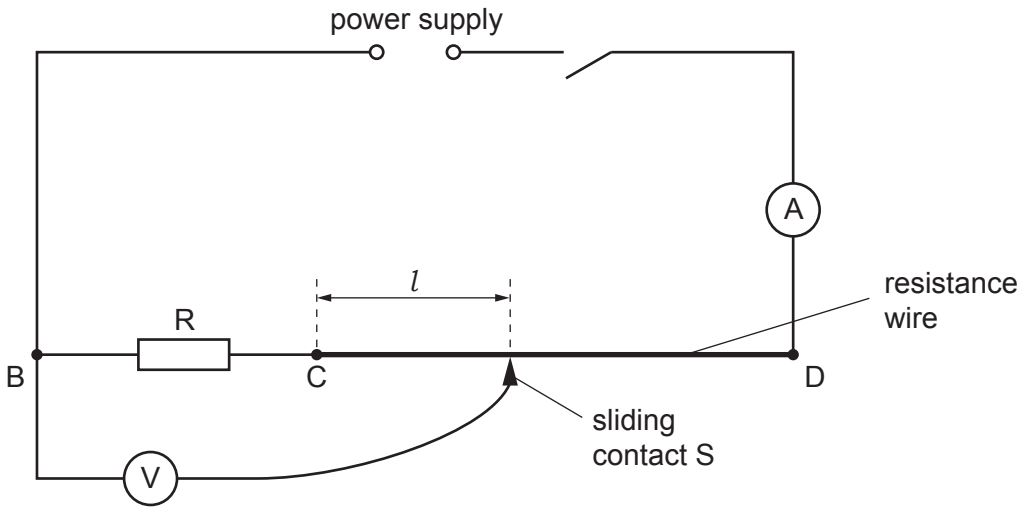

Fig. 3.1

(a) The student measures the current I in the circuit.

He places the sliding contact S at C and measures the potential difference (p.d.) V_1 across the resistor R.

The voltmeter and ammeter are shown in Fig. 3.2 and Fig. 3.3.

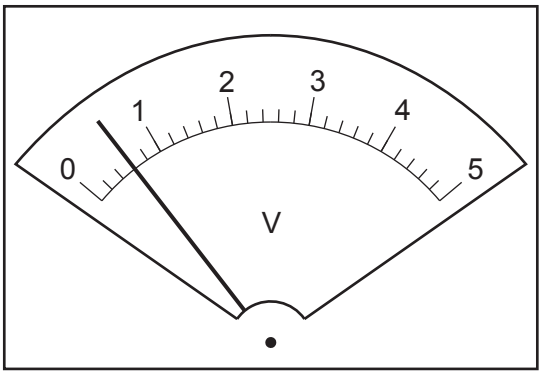

Fig. 3.2

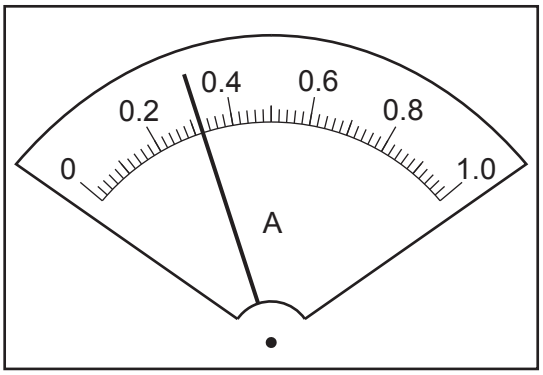

Fig. 3.3

(i) Write down the readings.
Include the units for potential difference, current or resistance where appropriate in all parts of the question.

V_1 = ...

I_1 = ...

[2]

(ii) Calculate the resistance R_1 of the resistor using the equation $R_1 = \frac{V_1}{I_1}$.

R_1 = ...

[2]

(b) The student disconnects the voltmeter from terminal B and connects the voltmeter to terminal C.
He places the sliding contact S at a distance l = 20.0 cm from C. He records, in Table 3.1, the reading on the voltmeter.
He repeats the procedure using l = 40.0 cm, 60.0 cm, 80.0 cm and 100.0 cm. His readings are shown in Table 3.1.

View solution

Table 3.1

l / cm	V / V
20.0	0.4
40.0	0.8
60.0	1.1
80.0	1.5
100.0	1.9

Plot a graph of V / V (y-axis) against l / cm (x-axis). Start both axes at the origin (0,0).

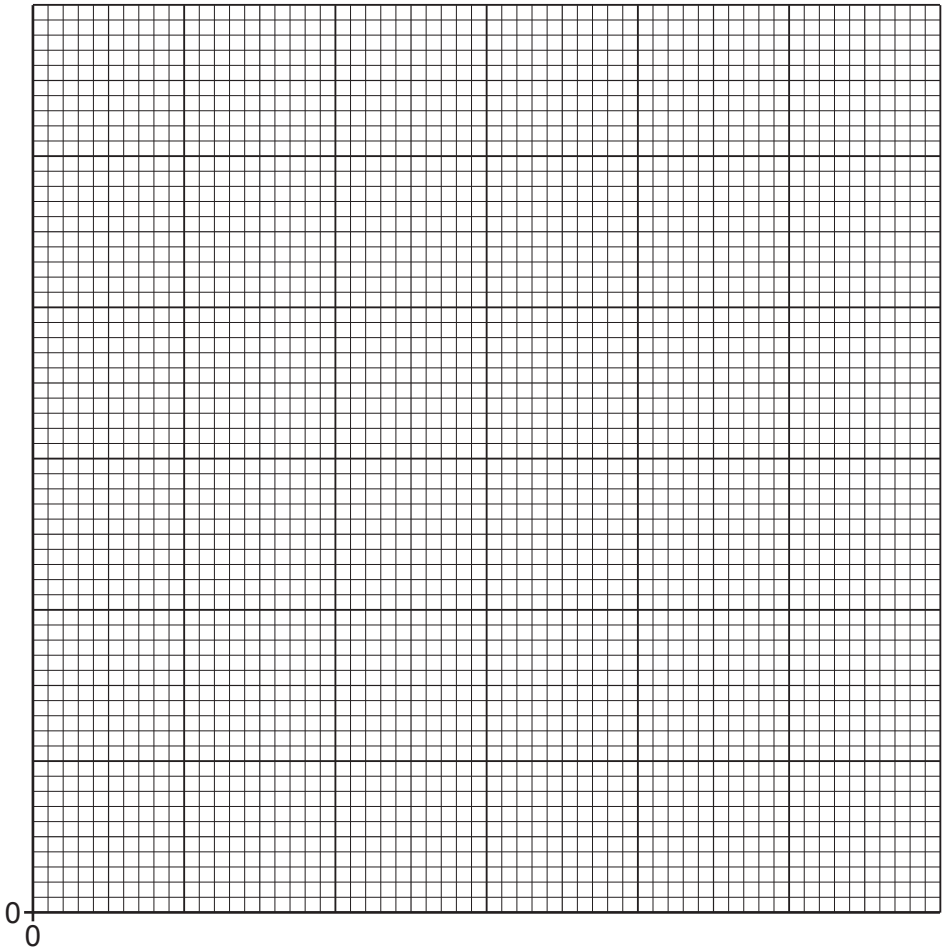

[4]

(c) Use your value of V_1 from **(a)(i)** to find the length l_R of resistance wire that has the same resistance as resistor R. Show clearly on the graph how you obtained the necessary information.

View solution 

l_R = ... cm [2]

(d) The resistance of the resistance wire is proportional to its length. Estimate the resistance of 100 cm of the resistance wire.

estimate ..... [1]

[Total: 11]


View solution

4 A student investigates springs made from different metals.

View solution

Plan an experiment to investigate the extension of springs made from different metals.

The following apparatus is available:

boss, clamp and stand
metre rule
springs made from different metals
selection of loads with hangers.

You can also use other apparatus and materials that are usually available in a school laboratory.

In your plan, you should:

- write a list of suitable metals for the springs
- draw a diagram of the set up you would use
- explain briefly how to carry out the investigation
- state the key variables to keep constant
- draw a table, or tables, with column headings, to show how to display your readings (you are **not** required to enter any readings in the table)
- explain how you would use the readings to reach a conclusion.

.....

.....

.....

.....

© UCLES 2021

.....

.....

.....

.....

.....

.....

.....

.....

.....

.....

.....

.....

.....

.....

.....

.....

..... [7]

BLANK PAGE

Permission to reproduce items where third-party owned material protected by copyright is included has been sought and cleared where possible. Every reasonable effort has been made by the publisher (UCLES) to trace copyright holders, but if any items requiring clearance have unwittingly been included, the publisher will be pleased to make amends at the earliest possible opportunity.

To avoid the issue of disclosure of answer-related information to candidates, all copyright acknowledgements are reproduced online in the Cambridge Assessment International Education Copyright Acknowledgements Booklet. This is produced for each series of examinations and is freely available to download at www.cambridgeinternational.org after the live examination series.

Cambridge Assessment International Education is part of the Cambridge Assessment Group. Cambridge Assessment is the brand name of the University of Cambridge Local Examinations Syndicate (UCLES), which itself is a department of the University of Cambridge.

© UCLES 2021