Cambridge Assessment International Education

Cambridge IGCSE™

CANDIDATE NAME									
CENTRE NUMBER						CANDIDATE NUMBER			

PHYSICS **0625/63**

Paper 6 Alternative to Practical **May/June 2021**

1 hour

You must answer on the question paper.

No additional materials are needed.

INSTRUCTIONS

- Answer **all** questions.
- Use a black or dark blue pen. You may use an HB pencil for any diagrams or graphs.
- Write your name, centre number and candidate number in the boxes at the top of the page.
- Write your answer to each question in the space provided.
- Do **not** use an erasable pen or correction fluid.
- Do **not** write on any bar codes.
- You may use a calculator.
- You should show all your working and use appropriate units.

INFORMATION

- The total mark for this paper is 40.
- The number of marks for each question or part question is shown in brackets [ ].

This document has **16** pages. Any blank pages are indicated.

© UCLES 2021

1 A student investigates the behaviour of a spring, and then uses the spring to determine the density of modelling clay.

The apparatus is shown in Fig. 1.1.

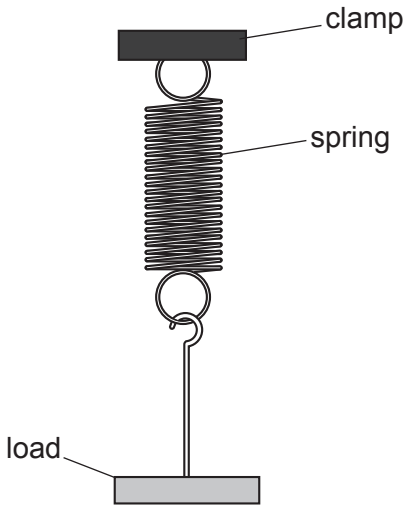

Fig. 1.1

(a) Describe **two** precautions that the student should take when measuring the length of the spring, to ensure an accurate reading. You may draw a diagram.

View solution

1. .....

.....

2. .....

.....

[2]

(b) The student measures the length l_0 of the spring without any load.

l_0 = ... 2.3 ..... cm

A load of weight W = 2.0 N is suspended from the spring, as shown in Fig. 1.2.

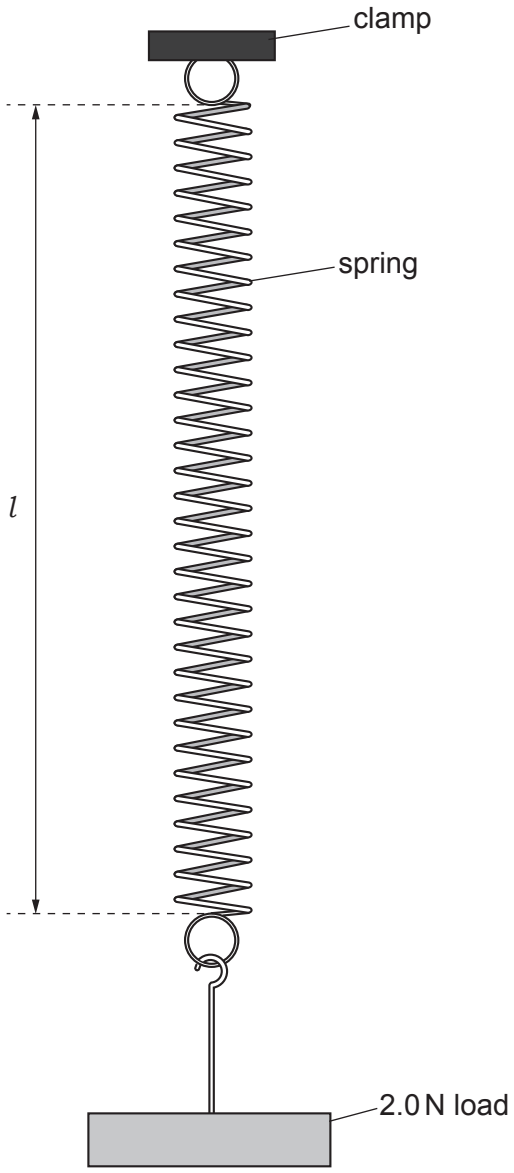

Fig. 1.2

(i) On Fig. 1.2, measure the stretched length l of the spring.

l = ... cm [1]

(ii) Calculate the extension e of the spring for a load of weight W = 2.0 N.
Use the equation $e = (l - l_0)$.

e = ... cm [1]

© UCLES 2021

(c) The 2.0 N load is removed from the spring.

A load U is made of modelling clay wrapped on a wire hanger. Load U is suspended from the spring.

View solution

The student measures the stretched length l_U of the spring.

l_U = 7.4 cm

Calculate the extension e_U of the spring with load U.

e_U = ... cm

The extension of a spring is directly proportional to the weight of the load.

Use your values of W and e from **(b)(ii)** and your value of e_U to determine the weight W_U of load U.
Show your working.

W_U = ...
[2]

(d) Load U is fully immersed in a beaker of water, as shown in Fig. 1.3.

View solution

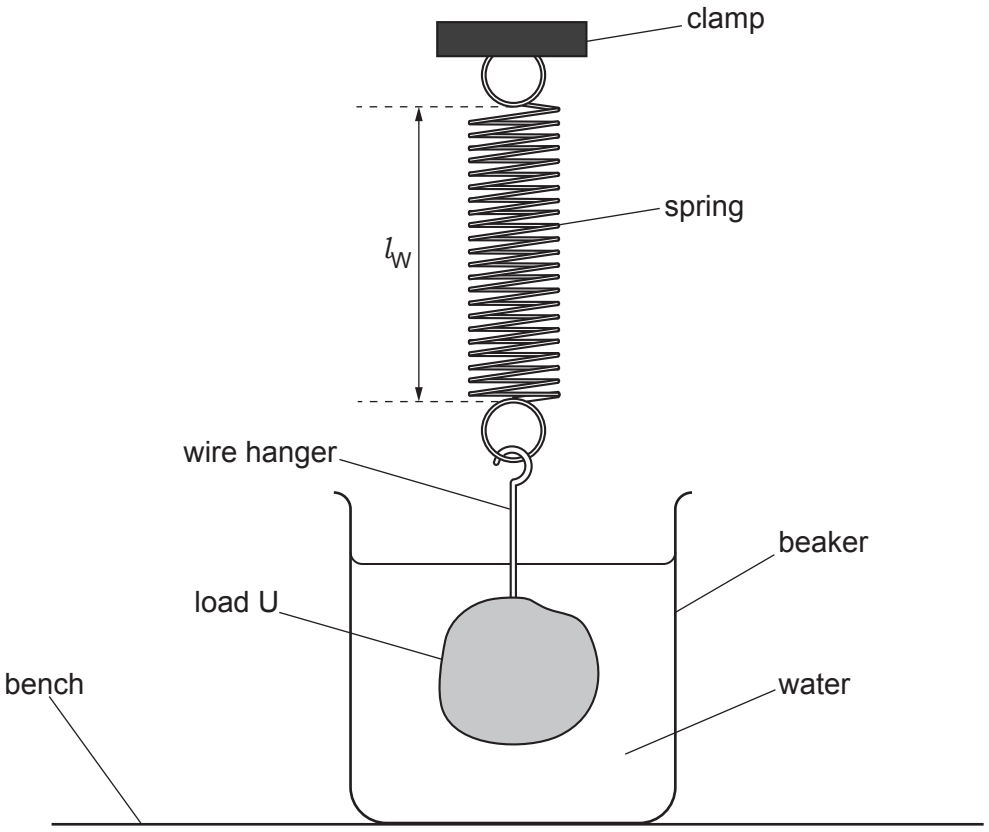

Fig. 1.3

© UCLES 2021

On Fig. 1.3, measure the stretched length l_W of the spring.

l_W = ... cm

Calculate the extension e_W of the spring with load U in the water.

e_W = ... cm

Calculate the density ρ of the modelling clay.
Use your values of e_U from **(c)**, your value of e_W and the equation

$$\rho = \frac{e_U}{(e_U - e_W)} \times k \text{ , where } k = 1.0\,\text{g/cm}^3.$$

ρ = ... g/cm^3
[2]

(e) Suggest a possible source of inaccuracy in the determination of ρ in this experiment.

View solution

.....

.....

..... [1]

(f) The student plots a graph of load against extension for the spring, to show that the two quantities are directly proportional.

State how his graph line shows that load and extension are directly proportional.

View solution

.....

.....

..... [2]

[Total: 11]

© UCLES 2021

2 A student determines the electromotive force (e.m.f.) and resistance of a cell by using a resistance wire.

She uses the circuit shown in Fig. 2.1.

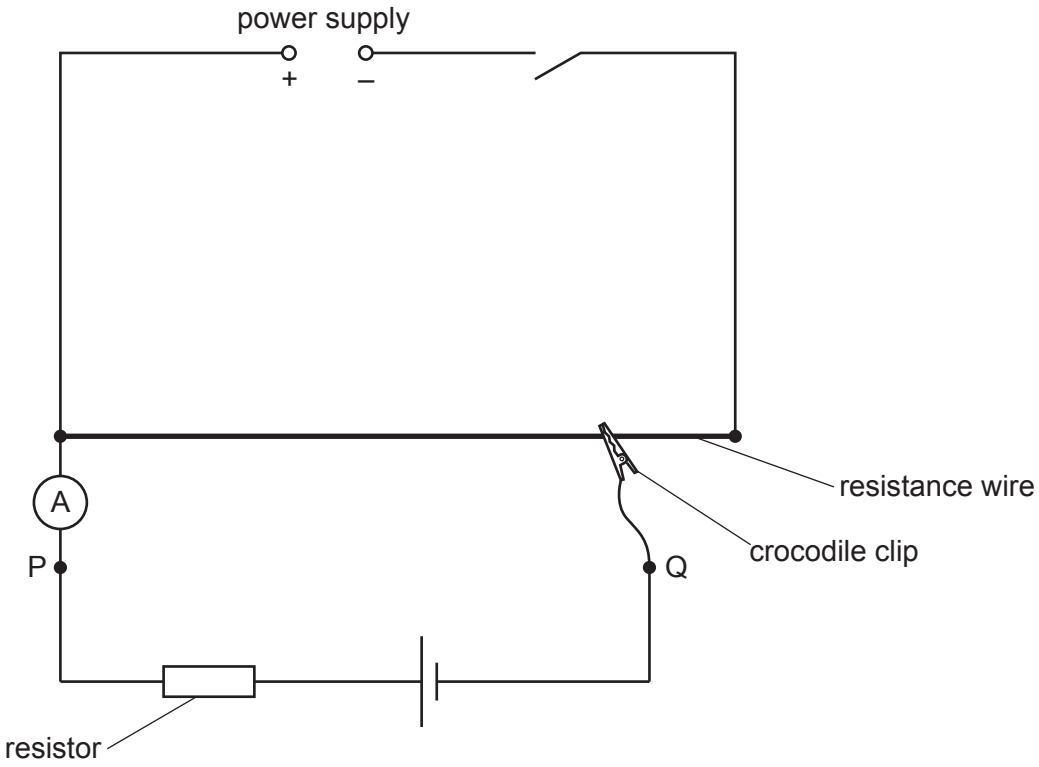

Fig. 2.1

View solution

(a) On Fig. 2.1, draw a voltmeter connected to measure the potential difference (p.d.) across terminals P and Q. [1]

(b) The switch is closed. The student moves the crocodile clip on the resistance wire so that the potential difference V across terminals P and Q is 5.0 V.

She measures the current I for the cell and resistor in series.

View solution

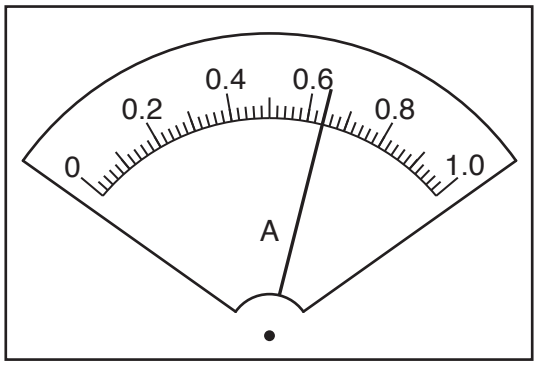

Fig. 2.2

Read, and record in Table 2.1, the value of I shown on the meter in Fig. 2.2. [1]

(c) The student repeats the procedure in **(b)** for values of V = 4.5 V, 4.0 V, 3.5 V and 3.0 V. Her readings are shown in Table 2.1.

View solution

Table 2.1

V/V	I/A
5.0	
4.5	0.56
4.0	0.44
3.5	0.35
3.0	0.28

Plot a graph of I/A (y-axis) against V/V (x-axis). Start both axes at the origin (0,0).

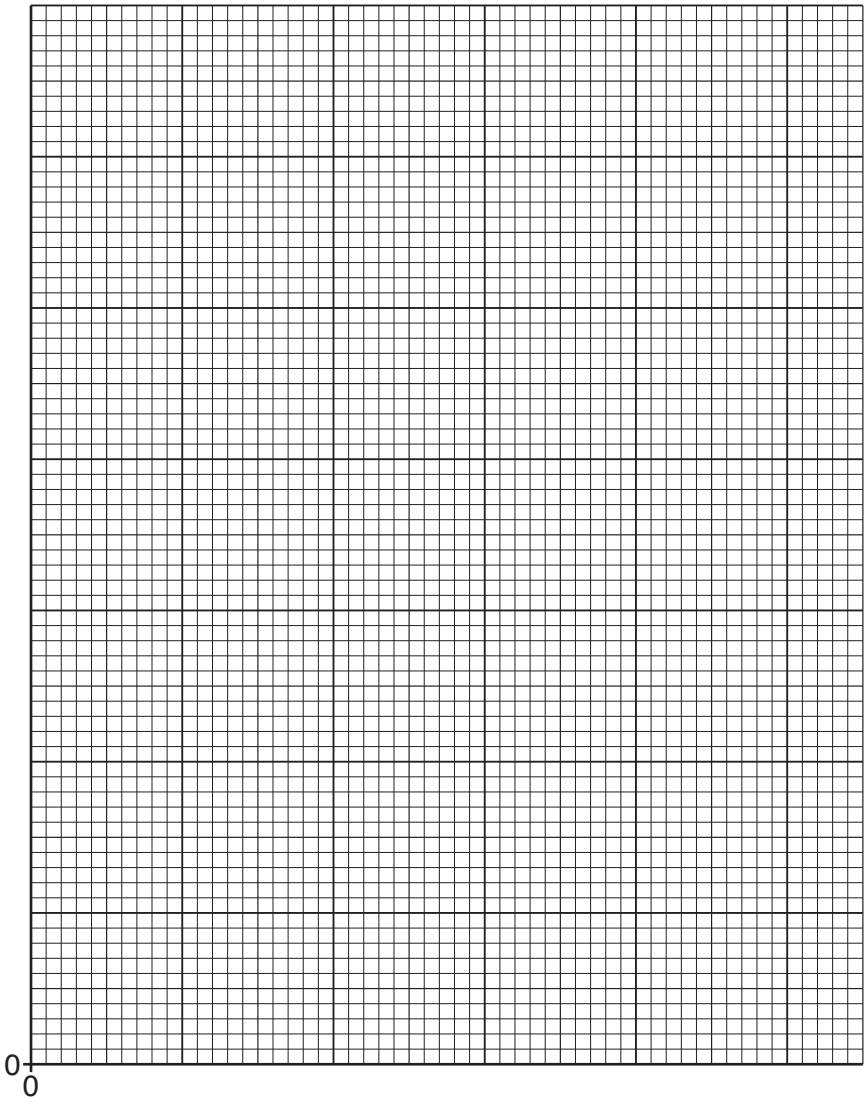

[4]

(d) The e.m.f. E of the cell is equal to the value of V when I = 0.0 A.

View solution

Determine the value of E from the graph.

E = ... [1]

(e) **(i)** Determine the gradient G of the graph. Show clearly on the graph how you obtained the necessary information.

View solution

G = ... [1]

(ii) The value of $\frac{1}{G}$ is numerically equal to the resistance $(r + R)$ where r is the resistance of the cell and $R = 4.0\,\Omega$.

Calculate the resistance r of the cell.

View solution

r = ... Ω [1]

(f) Suggest how the experiment and graph could be improved to obtain a more accurate value for e.m.f. E.

.....

.....

..... [2]

[Total: 11]

View solution

BLANK PAGE

3 A student investigates the refraction of light by a transparent block.
He uses his results to determine a quantity known as the refractive index of the material of the block.

The student's ray-trace sheet is shown full size in Fig. 3.1.

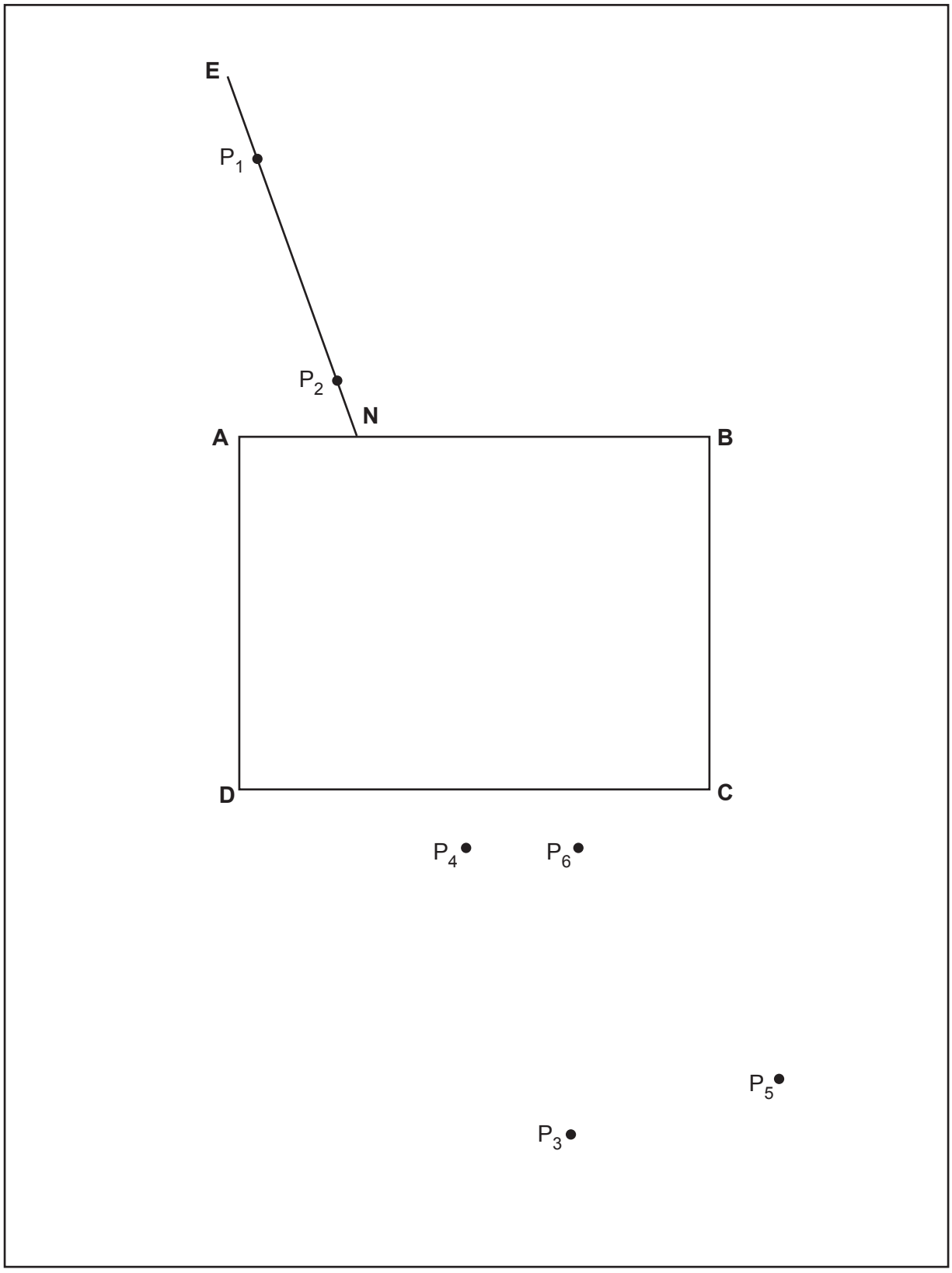

Fig. 3.1

(a) The student places a transparent block **ABCD** near the centre of the ray-trace sheet, as indicated in Fig. 3.1.

(i) Draw a normal at point **N**, extending above **AB**. Label the upper end of the normal with the letter **L**.
Extend the normal downwards until it crosses line **CD**. Label the point at which it crosses **CD** with the letter **F**. [1]

(ii) The student draws line **EN** as shown in Fig. 3.1.

View solution

On Fig. 3.1, measure the angle θ_1 between the lines **LN** and **EN**.

θ_1 = ... [1]

(b) The student places two pins, P_1 and P_2, on line **EN**, as shown in Fig. 3.1.

View solution

Suggest whether the two pins are a suitable distance apart for accurate ray tracing.
Explain your answer.

statement .....

explanation .....

.....
[1]

(c) The student views the images of P_1 and P_2 through the block.

He places two pins, P_3 and P_4, so that pins P_3 and P_4, and the images of P_1 and P_2, all appear exactly one behind the other.

View solution

- Draw a line through P_3 and P_4, extending the line until it meets **NF**.
- Label the point at which this line meets **NF** with the letter **G**.
- Label the point at which this line crosses **CD** with the letter **H**.
- Draw a line joining points **N** and **H**.

[1]

(d) **(i)** Measure the length *a* of line **NH**.

View solution

a = ... cm

Measure the length *b* of line **GH**.

b = ... cm
[1]

(ii) Calculate a value *n* for the refractive index, using the equation $n = \frac{a}{b}$.

View solution

n = ... [2]

© UCLES 2021

(e) The student repeats the above procedure for an angle $\theta_2 = 40°$.

He places two pins, P_5 and P_6, so that pins P_5 and P_6, and the images of P_1 and P_2, all appear exactly one behind the other.

View solution

- Draw a line through pins P_5 and P_6. Extend the line until it meets **GH**.
- Label the point at which this line meets **GH** with the letter **K**.
- Label the point at which this line crosses **CD** with the letter **R**.

(i) Measure the angle α, where α is the smaller angle between lines **RK** and **GH**.

α = ... [1]

(ii) A student suggests that the angle α should be equal to the difference between the angle θ_2 from **(e)** and the angle θ_1 from **(a)(ii)**.

State whether your results support this suggestion. Justify your answer by reference to your results.

statement .....

justification .....

.....

[1]

(f) Suggest a precaution which should be taken to ensure accurate results in this type of experiment.

.....

..... [1]

(g) Suggest why different students, all carrying out this experiment carefully, may **not** obtain identical results.

.....

..... [1]

[Total: 11]

View solution

BLANK PAGE

4 A student investigates the factors affecting the deflection of a wooden strip clamped at one end.

Plan an experiment which enables him to investigate how **one** factor affects the distance *D* that the free end of the wooden strip moves downwards when loads are placed on it.

View solution

The apparatus available includes:

a variety of wooden strips which can be clamped as shown in Fig. 4.1
a set of masses with a hanger.

In your plan, you should:

- list any additional apparatus needed
- state the key variables to be kept constant
- explain briefly how to carry out the experiment, including how *D* is to be measured and any precautions that must be taken to ensure reliable results
- draw a table, with column headings, to show how to display the readings (you are **not** required to enter any readings in the table)
- explain how to use the readings to reach a conclusion.

You may add to Fig. 4.1 or draw another diagram if it helps to explain your plan.

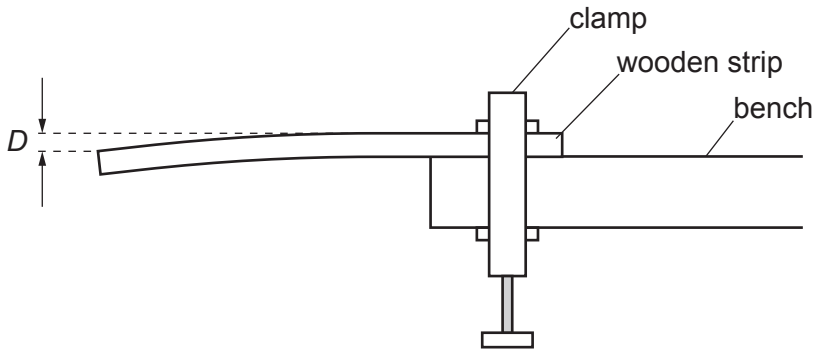

Fig. 4.1

.....

.....

.....

.....

.....

.....

.....

.....

.....

.....

.....

.....

.....

.....

.....

.....

.....

.....

.....

.....

..... [7]

BLANK PAGE

Permission to reproduce items where third-party owned material protected by copyright is included has been sought and cleared where possible. Every reasonable effort has been made by the publisher (UCLES) to trace copyright holders, but if any items requiring clearance have unwittingly been included, the publisher will be pleased to make amends at the earliest possible opportunity.

To avoid the issue of disclosure of answer-related information to candidates, all copyright acknowledgements are reproduced online in the Cambridge Assessment International Education Copyright Acknowledgements Booklet. This is produced for each series of examinations and is freely available to download at www.cambridgeinternational.org after the live examination series.

Cambridge Assessment International Education is part of the Cambridge Assessment Group. Cambridge Assessment is the brand name of the University of Cambridge Local Examinations Syndicate (UCLES), which itself is a department of the University of Cambridge.

© UCLES 2021