Cambridge Assessment International Education

Cambridge IGCSE™

PHYSICS **0625/12**

Paper 1 Multiple Choice (Core) **May/June 2022**

45 minutes

You must answer on the multiple choice answer sheet.

You will need: Multiple choice answer sheet
Soft clean eraser
Soft pencil (type B or HB is recommended)

INSTRUCTIONS

- There are **forty** questions on this paper. Answer **all** questions.
- For each question there are four possible answers **A**, **B**, **C** and **D**. Choose the **one** you consider correct and record your choice in soft pencil on the multiple choice answer sheet.
- Follow the instructions on the multiple choice answer sheet.
- Write in soft pencil.
- Write your name, centre number and candidate number on the multiple choice answer sheet in the spaces provided unless this has been done for you.
- Do **not** use correction fluid.
- Do **not** write on any bar codes.
- You may use a calculator.
- Take the weight of 1.0 kg to be 10 N (acceleration of free fall = 10 m / s^2).

INFORMATION

- The total mark for this paper is 40.
- Each correct answer will score one mark.
- Any rough working should be done on this question paper.

This document has **16** pages.

© UCLES 2022

1 A lump of modelling clay is moved from a small measuring cylinder to a large measuring cylinder that has twice the diameter.

View solution

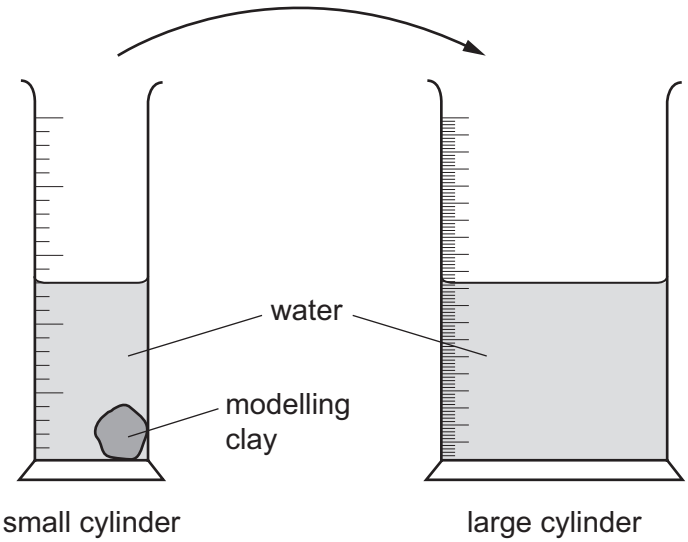

The reading on the small measuring cylinder goes down by 20 cm^3.

By how much does the reading on the large cylinder go up?

A 10 cm^3 **B** 20 cm^3 **C** 40 cm^3 **D** 80 cm^3

2 What is used to determine the distance travelled by an object in motion?

View solution

A the area under a distance–time graph

B the area under a speed–time graph

C the gradient of a distance–time graph

D the gradient of a speed–time graph

3 A man stands next to a railway track.

View solution

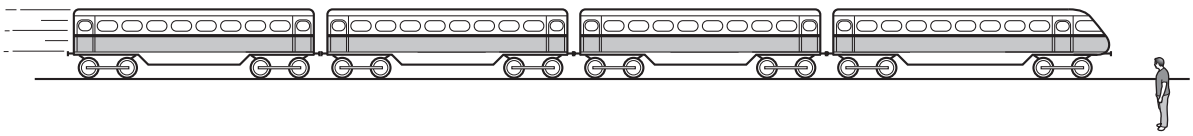

A train travelling at 40 m / s takes 2.0 s to pass the man.

What is the length of the train?

A 20 m **B** 38 m **C** 40 m **D** 80 m

© UCLES 2022

4 An object is moved from point X to point Y.

View solution

The acceleration of free fall at X is different from that at Y.

Which statement about the object at Y is correct?

A Both its mass and its weight are different from those at X.

B Both its mass and its weight are the same as those at X.

C Its mass is the same as at X but its weight is different.

D Its weight is the same as at X but its mass is different.

5 A measuring cylinder contains 30 cm^3 of a liquid.

View solution

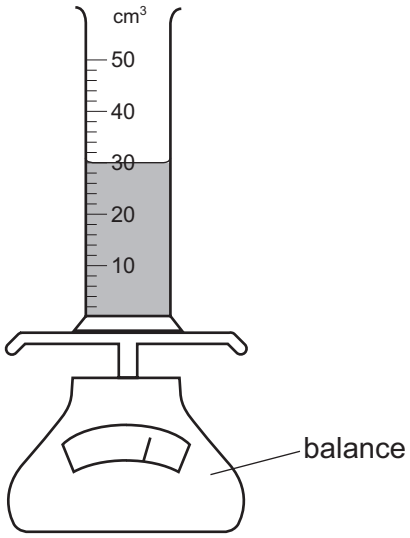

Some more of the liquid is added until the liquid level reaches the 50 cm^3 mark.

The reading on the balance increases by 30 g.

What is the density of the liquid?

A 0.60 g/cm^3 **B** 0.67 g/cm^3 **C** 1.5 g/cm^3 **D** 1.7 g/cm^3

© UCLES 2022

6 A spaceship approaches and passes a planet.

View solution



spaceship

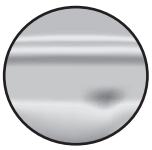

planet

What can the force of gravity between the spaceship and planet achieve?

A It can change the direction of the spaceship, or slow it down, but not speed it up.

B It can change the direction of the spaceship, or speed it up, but not slow it down.

C It can slow down the spaceship, or speed it up, but not change its direction.

D It can change the direction of the spaceship, slow it down, or speed it up.

7 A beam is pivoted at one end, as shown.

View solution

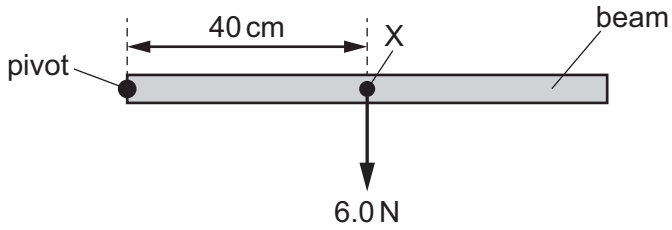

The beam weighs 6.0 N and its weight acts at a point X 40 cm from the pivot.

A force of 4.0 N is applied to the beam causing it to balance horizontally.

In which direction and where is the 4.0 N force applied?

A vertically downwards at 20 cm to the left of X

B vertically downwards at 20 cm to the right of X

C vertically upwards at 20 cm to the left of X

D vertically upwards at 20 cm to the right of X

8 What are the conditions for an object to be in equilibrium?

View solution

	forces on object	moment on object
A	no resultant force	no resultant moment
B	no resultant force	resultant moment
C	resultant force	no resultant moment
D	resultant force	resultant moment

© UCLES 2022

9 A tennis ball is dropped from position 1. It falls vertically onto a hard surface at position 2.

View solution

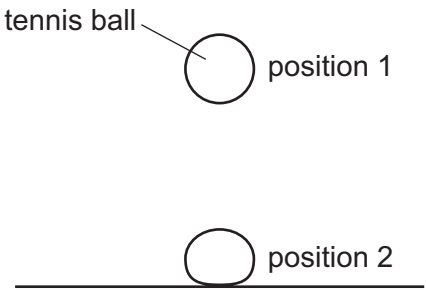

Which energy changes have taken place between position 1 and position 2?

A gravitational potential → kinetic → chemical

B gravitational potential → kinetic → elastic (strain)

C kinetic → gravitational potential → chemical

D kinetic → gravitational potential → elastic (strain)

10 A force does work moving an object in the direction of the force.

View solution

Which change in the force and distance **always** increases the work done?

	force	distance
A	greater	same
B	greater	smaller
C	same	smaller
D	smaller	smaller

11 The table shows the weights and base areas of four metal blocks.

View solution

Which block exerts the greatest pressure on its base?

	weight / N	area of base / m^2
A	3 000	0.20
B	10 000	0.50
C	16 000	2.0
D	20 000	1.5

© UCLES 2022

12 The diagram shows a deep reservoir formed by a dam.

View solution

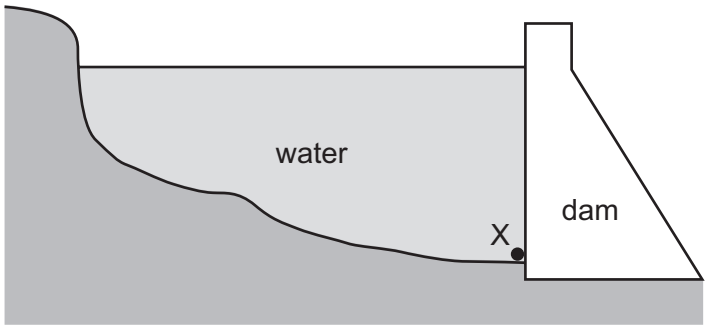

On what does the pressure at X depend?

A the depth of the water at X

B the length of the reservoir

C the surface area of the water

D the thickness of the dam wall

13 A particular state of matter consists of molecules that move freely in random directions at high speed. The average speed of the molecules is decreasing.

View solution

Which state of matter is being described?

A a gas cooling

B a gas being heated

C a solid cooling

D a liquid being heated

14 Small pollen particles are suspended in water.

View solution

When viewed with a microscope, the pollen particles can be seen to be moving about irregularly.

What causes this movement?

A The pollen particles are being bombarded by the heavier particles of the water.

B The pollen particles are being bombarded by the lighter particles of the water.

C The temperature of the water is higher than that of the pollen particles.

D The temperature of the water is lower than that of the pollen particles.

© UCLES 2022

15 The diagram shows a liquid-in-glass thermometer.

View solution

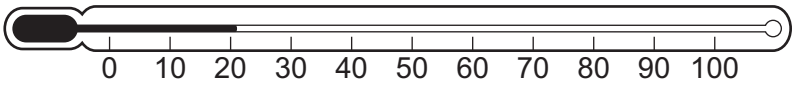

Which physical property of the thermometer is used to measure temperature?

A expansion of glass

B expansion of liquid

C mass of glass

D mass of liquid

16 An engineer investigates the increase in temperature of the oil in a car engine when it is first switched on.

View solution

Which row is correct?

	change in internal energy	explanation
A	increase	The random kinetic energy of the particles increases.
B	increase	The oil evaporates when it is heated.
C	decrease	The potential energy of the particles increases.
D	decrease	The oil changes state to a gas when it is heated.

17 A glass contains an iced drink on a warm and humid day. Water starts to form on the outside of the glass.

View solution

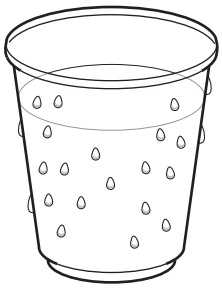

What is the name of the effect by which the water forms?

A condensation

B conduction

C convection

D evaporation

18 The diagram shows solar water panels on the roof of a house. The panels absorb energy from the Sun to heat up the water in the metal pipes.

View solution

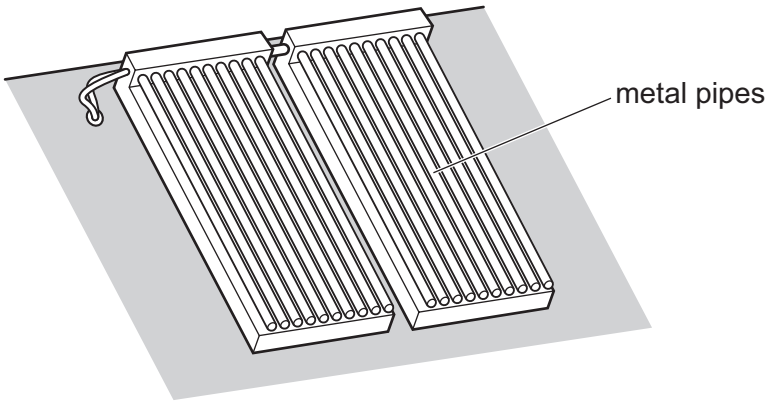

Which row describes how energy is transferred from the Sun and through the metal of the pipes?

	from the Sun	through the metal of the pipes
A	conduction	conduction
B	conduction	convection
C	radiation	conduction
D	radiation	convection

19 Four beakers containing equal volumes of water at 10 °C are placed outside in full sunshine on a hot day.

View solution

The four beakers are identical except for their surface colour and texture.

Which beaker will heat up the quickest?

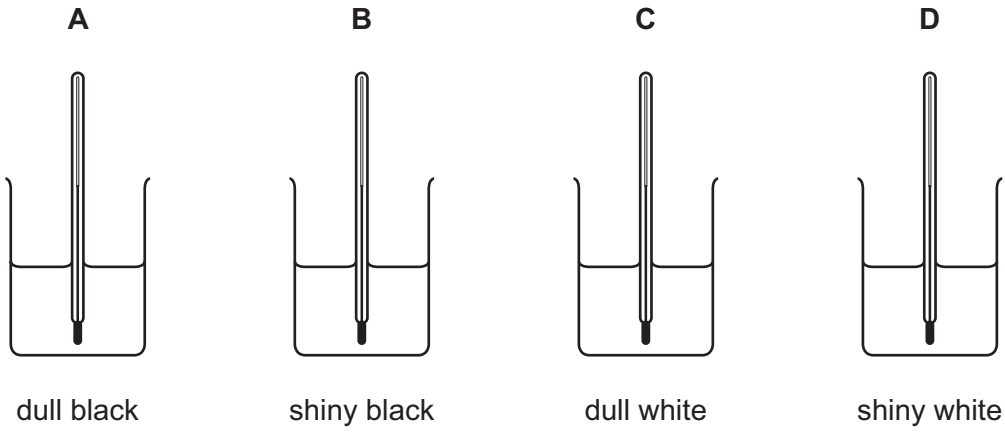

20 The diagram shows a wave.

View solution

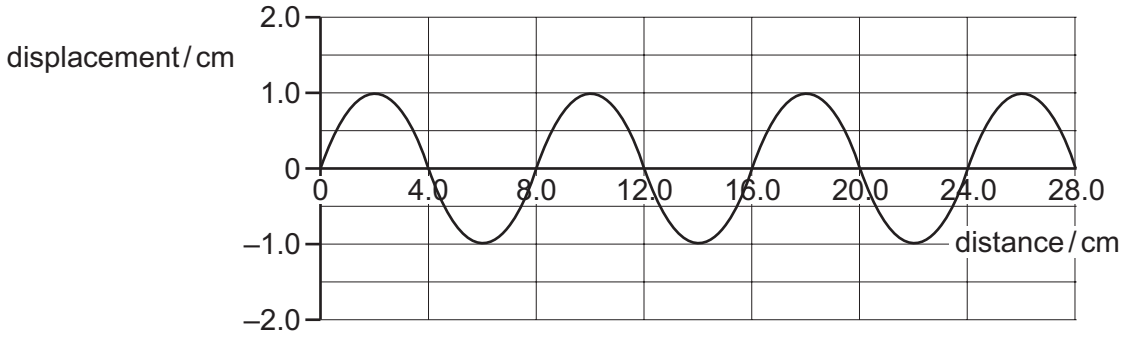

Which row is correct?

	amplitude of the wave / cm	wavelength of the wave / cm
A	1.0	4.0
B	1.0	8.0
C	2.0	4.0
D	2.0	8.0

21 A girl is sitting on a rock in the sea looking at passing waves. She notices that five complete wavelengths pass her in 20 s.

View solution

What is the frequency of this wave?

A 0.25 Hz **B** 4.0 Hz **C** 15 Hz **D** 100 Hz

22 A student uses one eye to look at images in a plane mirror.

View solution

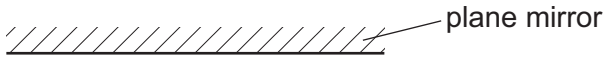

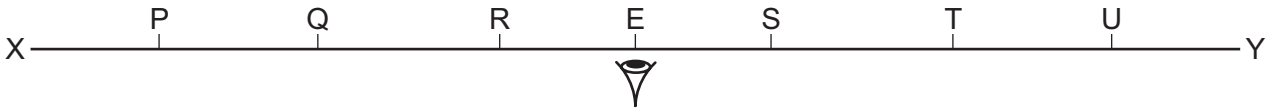

Objects are placed on the line XY.

Which objects give rise to images that can be seen by the eye at E?

A P, Q, R, S, T and U

B Q, R, S and T only

C P and U only

D R and S only

© UCLES 2022

23 An object is placed in front of a converging lens. The lens has a focal length *f*.

In which labelled position should the object be placed in order to produce a real image that is smaller than the object?

View solution

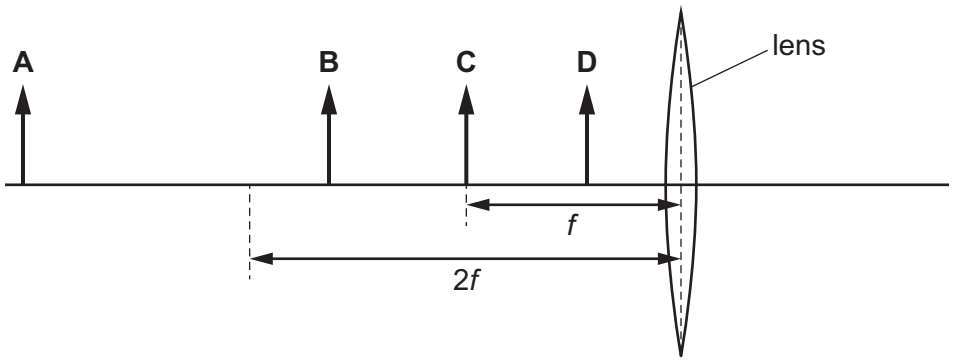

24 Microwaves, green light and infrared are three types of electromagnetic radiation.

View solution

What is their order when listed by wavelength from the shortest wavelength to the longest?

A green light → infrared → microwaves

B green light → microwaves → infrared

C infrared → green light → microwaves

D microwaves → infrared → green light

25 Which statement correctly compares radio waves and X-rays?

View solution

A Radio waves have a longer wavelength and a greater speed in a vacuum.

B Radio waves have a longer wavelength and the same speed in a vacuum.

C Radio waves have a shorter wavelength and a greater speed in a vacuum.

D Radio waves have a shorter wavelength and the same speed in a vacuum.

26 The three diagrams each show two magnets.

View solution

1



2



3



In which diagrams do the two magnets attract each other?

A 1 only **B** 1 and 3 **C** 2 only **D** 2 and 3

27 The diagram shows the magnetic fields around three objects, P, Q and R, placed close to each other.

View solution

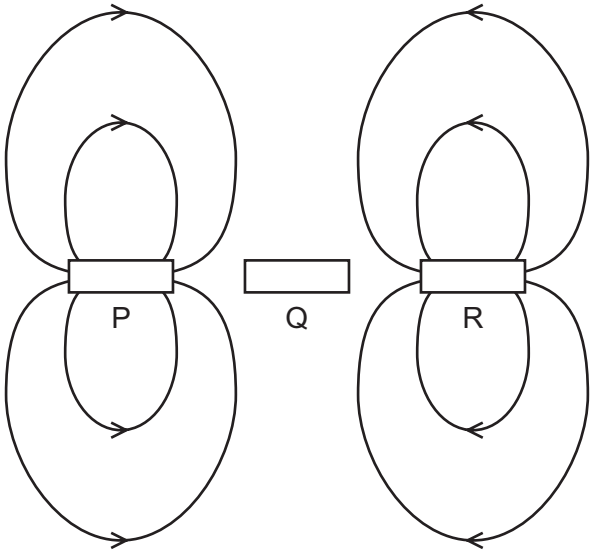

Which row shows the nature of each of the objects?

	P	Q	R
A	permanent magnet N S	copper rod	permanent magnet N S
B	permanent magnet N S	copper rod	permanent magnet S N
C	permanent magnet N S	iron rod	permanent magnet N S
D	permanent magnet N S	iron rod	permanent magnet S N

28 Iron filings are picked up by an electromagnet.

View solution

The current in the electromagnet is switched off and the filings fall on a plastic bench.

A plastic comb is rubbed with a woollen cloth and held just above the iron filings.

Some of the filings jump and stick to the comb.

Which statement correctly explains the last observation?

A The comb has been electrically charged by rubbing with the cloth.

B The comb has been magnetised by rubbing with the cloth.

C The filings have been electrically charged by the electromagnet.

D The filings have been magnetised by the electromagnet.

© UCLES 2022

29 Four circuits are set up.

View solution

In which circuit does the meter measure the potential difference (p.d.) across the resistor?

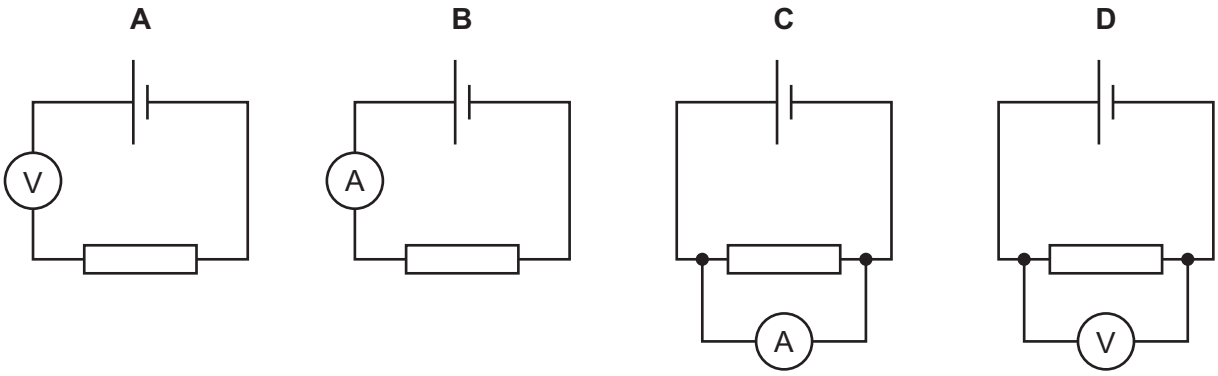

30 A resistor has a potential difference (p.d.) of 12 V across it and a current of 0.60 A in it.

View solution

What is the resistance of the resistor?

A 0.050 Ω **B** 2.0 Ω **C** 7.2 Ω **D** 20 Ω

© UCLES 2022

31 Which circuit is correctly labelled?

View solution

A

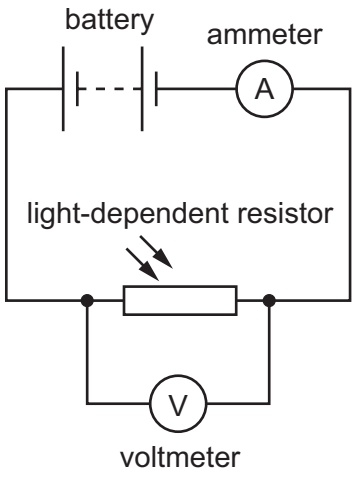

B

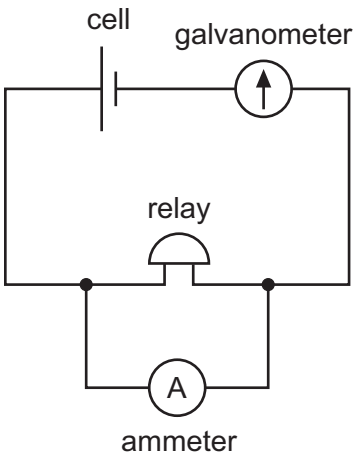

C

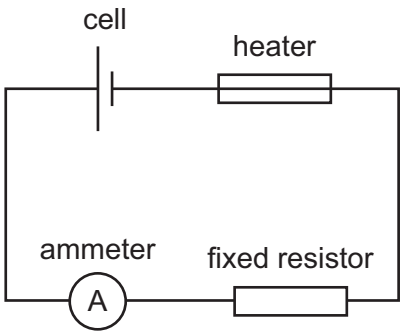

D

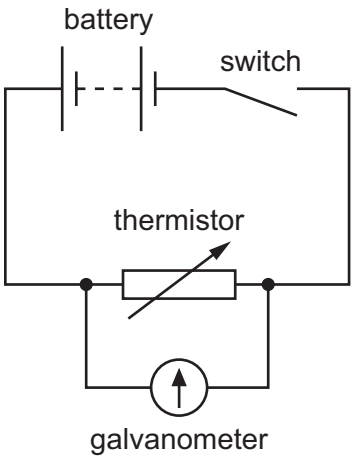

32 The diagram shows an electric circuit.

View solution

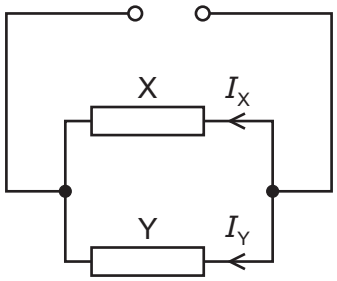

I_X is the current in resistor X. I_Y is the current in resistor Y.

Which statement describes the current from the power supply?

A greater than I_X and greater than I_Y

B greater than I_X and less than I_Y

C less than I_X and greater than I_Y

D less than I_X and less than I_Y

33 The diagram shows a battery connected to a potential divider and to two lamps, P and Q.

View solution

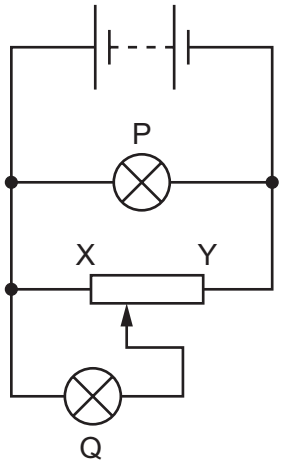

The slider on the potential divider is moved from end X to end Y of the resistor.

Which row shows the effect on the brightness of each lamp?

	brightness of P	brightness of Q
A	brighter	brighter
B	brighter	dimmer
C	unchanged	brighter
D	unchanged	dimmer

© UCLES 2022

34 Why is a fuse used in an electrical circuit?

View solution

A so that the current can have only one value

B to prevent the current becoming too large

C to provide a path to earth if a fault occurs

D to save electrical energy

35 Electrical power is transmitted from power stations to homes using the National Grid.

View solution

In which part of the National Grid is the voltage highest?

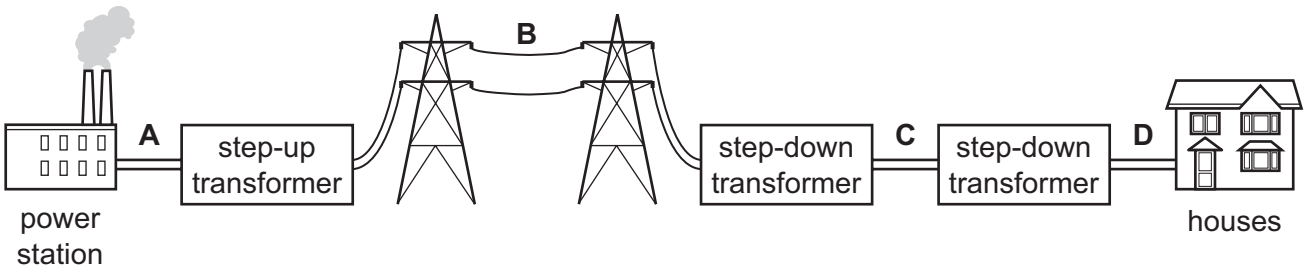

36 Which transformer can change a 240 V a.c. input into a 15 V a.c. output?

View solution

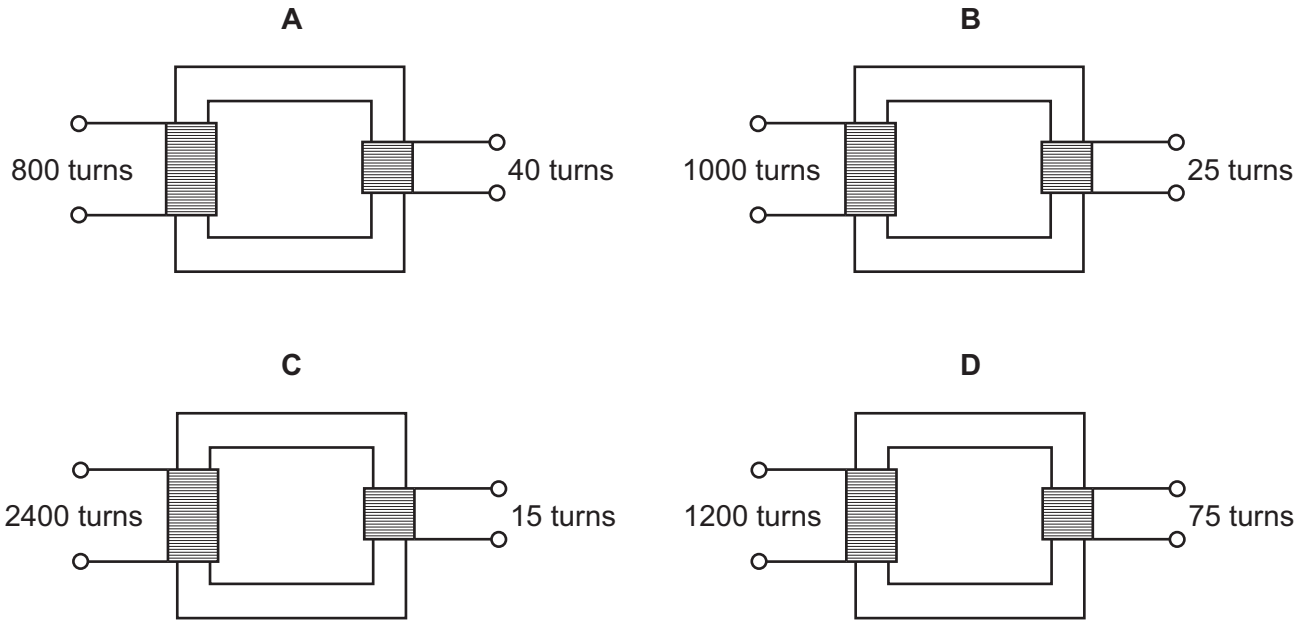

Permission to reproduce items where third-party owned material protected by copyright is included has been sought and cleared where possible. Every reasonable effort has been made by the publisher (UCLES) to trace copyright holders, but if any items requiring clearance have unwittingly been included, the publisher will be pleased to make amends at the earliest possible opportunity.

To avoid the issue of disclosure of answer-related information to candidates, all copyright acknowledgements are reproduced online in the Cambridge Assessment International Education Copyright Acknowledgements Booklet. This is produced for each series of examinations and is freely available to download at www.cambridgeinternational.org after the live examination series.

Cambridge Assessment International Education is part of Cambridge Assessment. Cambridge Assessment is the brand name of the University of Cambridge Local Examinations Syndicate (UCLES), which is a department of the University of Cambridge.

© UCLES 2022

37 The coils in two electric motors are identical in size, but motor 1 is observed to spin more quickly than motor 2.

View solution

Three suggestions are made to explain this observation.

1 The current in the coil of motor 1 is greater than the current in the coil of motor 2.

2 The number of turns on the coil of motor 1 is greater than on the coil of motor 2.

3 The magnets in motor 1 are stronger than the magnets in motor 2.

Which suggestions give a possible explanation for this observation?

A 1 only **B** 1 and 3 only **C** 2 and 3 only **D** 1, 2 and 3

38 Which statement describes two atoms of different isotopes of an element?

View solution

A two atoms with the same nucleon number but different proton number

B two atoms with a different nucleon number but the same proton number

C two atoms with the same nucleon number and the same proton number

D two atoms with a different nucleon number and different proton number

39 A radioactive source has a half-life of 0.5 hours.

View solution

A detector near the source shows a reading of 6000 counts per second.

Background radiation can be ignored.

What is the reading on the detector 1.5 hours later?

A 750 counts per second

B 1500 counts per second

C 2000 counts per second

D 3000 counts per second

40 Some nuclei are unstable. They emit radiation and change into nuclei of a different element.

View solution

What is this process called?

A convection

B electromagnetic induction

C radioactive decay

D the motor effect

© UCLES 2022