Cambridge Assessment International Education

Cambridge IGCSE™

CANDIDATE NAME									
CENTRE NUMBER						CANDIDATE NUMBER				

PHYSICS **0625/33**

Paper 3 Theory (Core) **May/June 2022**

1 hour 15 minutes

You must answer on the question paper.

No additional materials are needed.

INSTRUCTIONS

- Answer **all** questions.
- Use a black or dark blue pen. You may use an HB pencil for any diagrams or graphs.
- Write your name, centre number and candidate number in the boxes at the top of the page.
- Write your answer to each question in the space provided.
- Do **not** use an erasable pen or correction fluid.
- Do **not** write on any bar codes.
- You may use a calculator.
- You should show all your working and use appropriate units.
- Take the weight of 1.0 kg to be 10 N (acceleration of free fall = 10 m / s^2).

INFORMATION

- The total mark for this paper is 80.
- The number of marks for each question or part question is shown in brackets [ ].

This document has **16** pages. Any blank pages are indicated.

© UCLES 2022

1 Fig. 1.1 shows children about to run a race. They have to run 25 m, pick up a small plastic ring and run back to the base line. Each child finishes when they cross the base line holding the plastic ring.

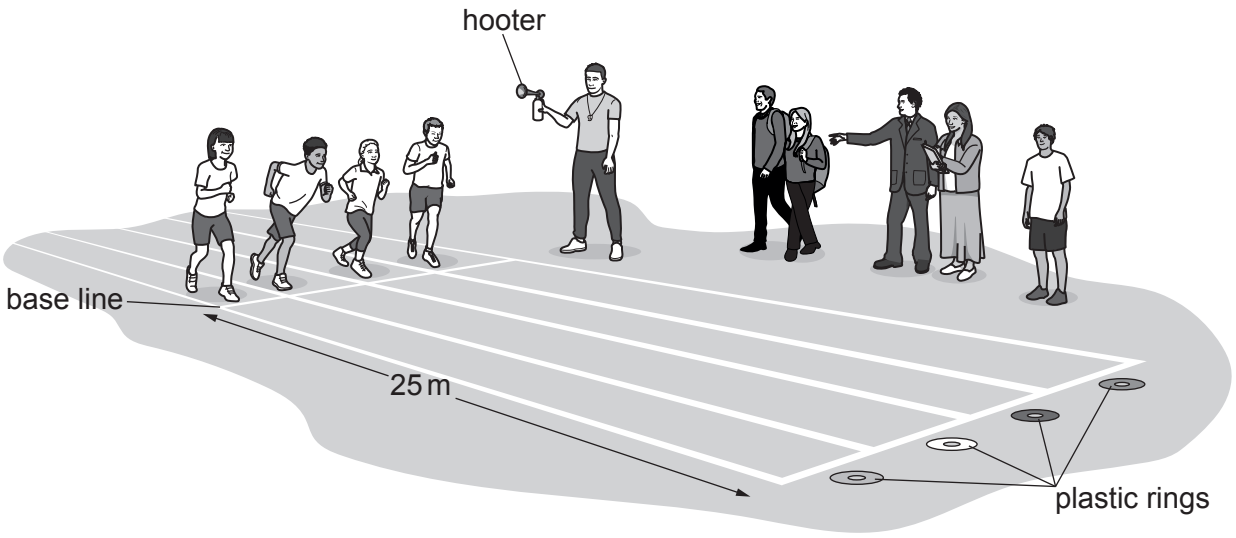

Fig. 1.1

(a) (i) Suggest what equipment the teacher uses to measure the length of 25 m.

View solution

..... [1]

(ii) Determine the total distance for the race.

distance = ... m [1]

View solution

(b) The teacher records the following information for **one** of the children.

View solution

The child starts to run at time = 0.
The child picks up the ring at time = 9.0 s.
The child finishes the race at time = 17.0 s.
The highest speed occurs as the child finishes the race.

Using this information, sketch a speed–time graph on Fig. 1.2, suggesting how the speed of this child varies during the race.

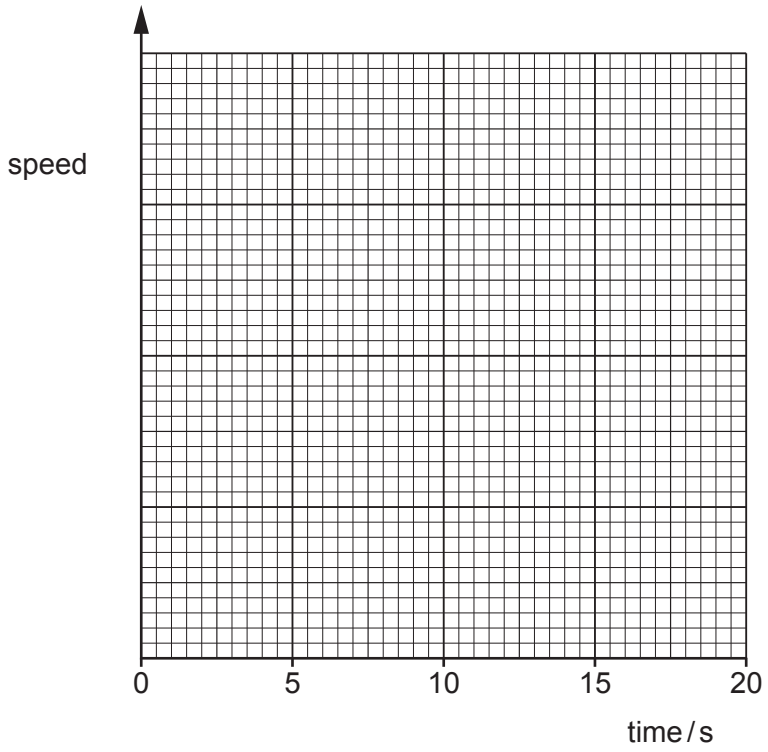

Fig. 1.2

[3]

(c) In a different race, a child runs 500 m in 4 minutes and 20 seconds.

View solution

(i) Determine how many seconds there are in 4 minutes and 20 seconds.

time = ... s [1]

(ii) Calculate the average speed of the child.

View solution

average speed = ... m / s [3]

[Total: 9]

© UCLES 2022

2 Fig. 2.1 shows two identical metal blocks, A and B, being lifted 3.0 m from ground level.

Block A is lifted by a motor. Block B is lifted by a person.

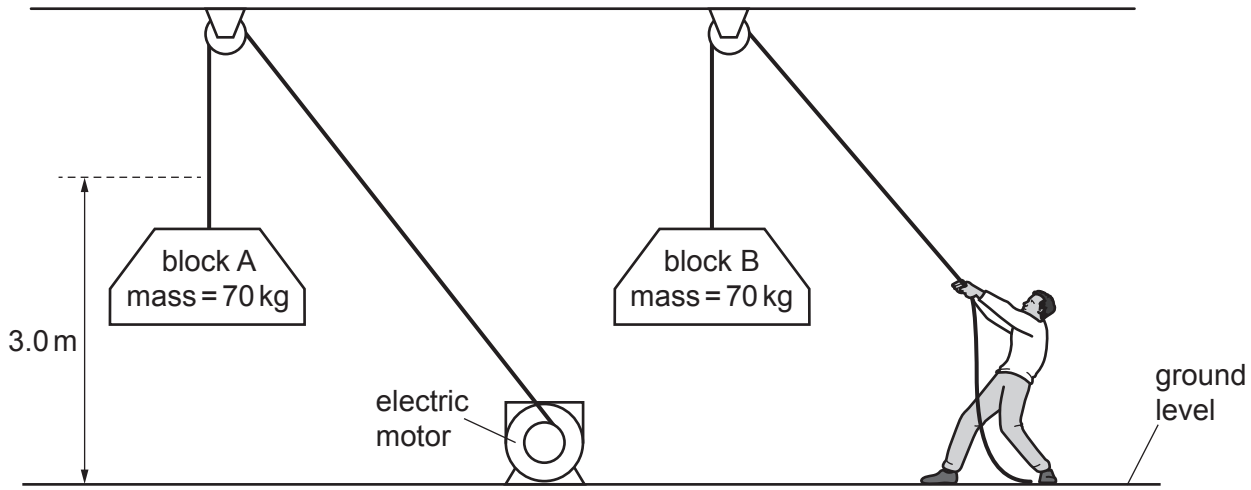

Fig. 2.1

(a) Complete the following sentences.

View solution

(i) As the motor starts turning, it usefully transfers ..... energy to

..... energy. [2]

(ii) Both blocks gain ..... energy. [1]

(b) Both blocks are lifted at the same steady speed. The blocks are then held at a height of 3.0 m.

(i) Compare the energy gained by block A with the energy gained by block B.

..... [1]

(ii) Explain why the energy input to the motor is more than the energy gained by block A.

View solution

.....

.....

..... [2]

© UCLES 2022

(iii) An engineer determines the power output of the motor.

State the **three** measurements that the engineer needs to determine the power output of the motor.

1. .....

2. .....

3. .....

[2]

(c) The volume of block A is $0.0089\,m^3$. The mass of block A is 70 kg.

View solution

Calculate the density of block A.

density = ... kg/m^3 [3]

[Total: 11]

3 Fig. 3.1 shows a vehicle that is designed to travel on snow.

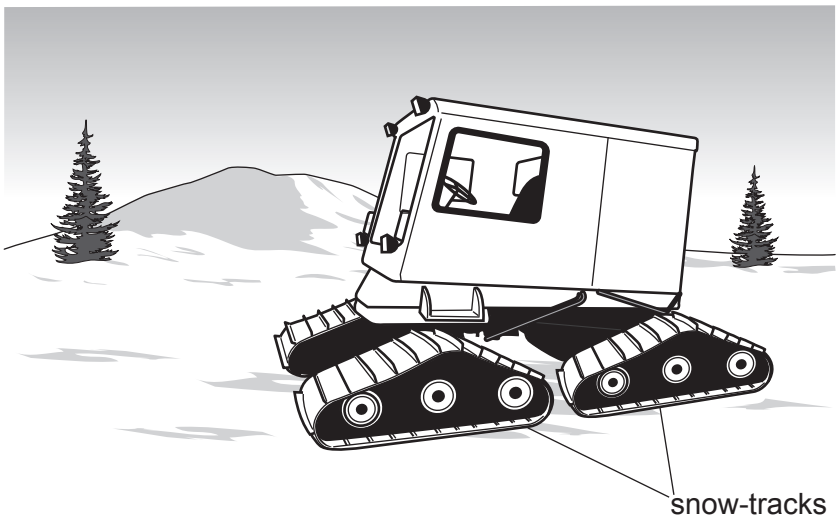

Fig. 3.1

The vehicle has four snow-tracks.

(a) Explain why the snow-tracks are better than wheels for travelling on snow.

View solution

.....

.....

..... [2]

(b) The weight of the vehicle is 4000 N.

View solution

(i) Calculate the mass of the vehicle.

mass = ... kg [3]

(ii) The area of each snow-track in contact with the ground is 2.0 m^2. Each snow-track supports a quarter of the weight of the vehicle.

Calculate the pressure that each snow-track exerts on the ground. Include the unit in your answer.

View solution

pressure exerted by each snow-track = ... unit ..... [4]

[Total: 9]

© UCLES 2022

4 **(a)** State and explain **one** application of thermal expansion.

View solution

You may draw a diagram to support your answer.

.....

.....

.....

..... [2]

(b) Fig. 4.1 shows a flask with air trapped inside it.

View solution

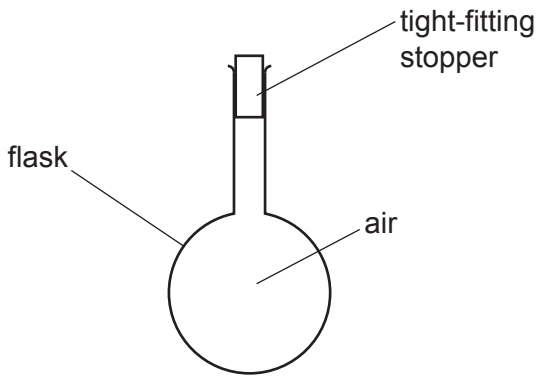

Fig. 4.1

Initially, the flask and air are at room temperature. The flask is then cooled in a refrigerator.

(i) State the change in the pressure of the air in the flask as the air cools.

..... [1]

(ii) Explain your answer to **(b)(i)**. Use your ideas about air molecules.

View solution

.....

.....

.....

..... [3]

[Total: 6]

© UCLES 2022

5 An engineer makes a device that absorbs thermal energy from the Sun. The absorbed energy heats water.

In the device, cold water flows slowly from an upper tank, through a white plastic pipe, to a lower tank. Energy from the Sun heats the water as it flows, as shown in Fig. 5.1.

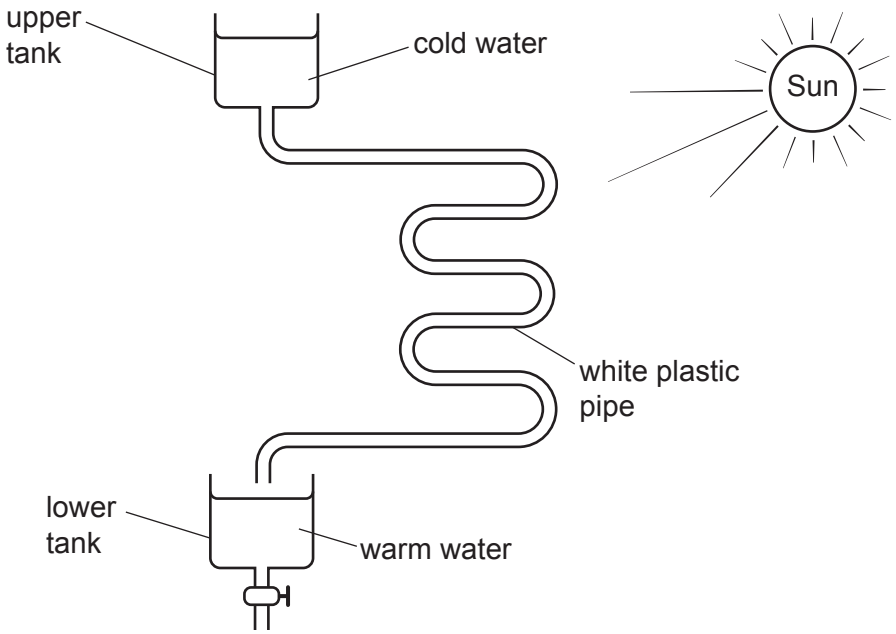

Fig. 5.1

(a) The engineer measures the temperature of the water in each tank.

State the name of the instrument used for measuring temperature.

..... [1]

(b) **(i)** State the name of the process that transfers thermal energy from the Sun to the white plastic pipe.

..... [1]

(ii) State the name of the process that transfers thermal energy through the plastic wall of the pipe to the water inside the pipe.

..... [1]

(c) The engineer wants to increase the thermal energy absorbed by the water in the pipe.

View solution

Suggest **two** improvements he can make to increase the thermal energy absorbed.

In each case, explain why the suggestion increases the thermal energy absorbed.

improvement 1 .....

.....

explanation .....

.....

improvement 2 .....

.....

explanation .....

.....

[4]

[Total: 7]

6 A diver is swimming under water. She uses a torch emitting red light. Fig. 6.1 shows three rays of red light coming from the torch.

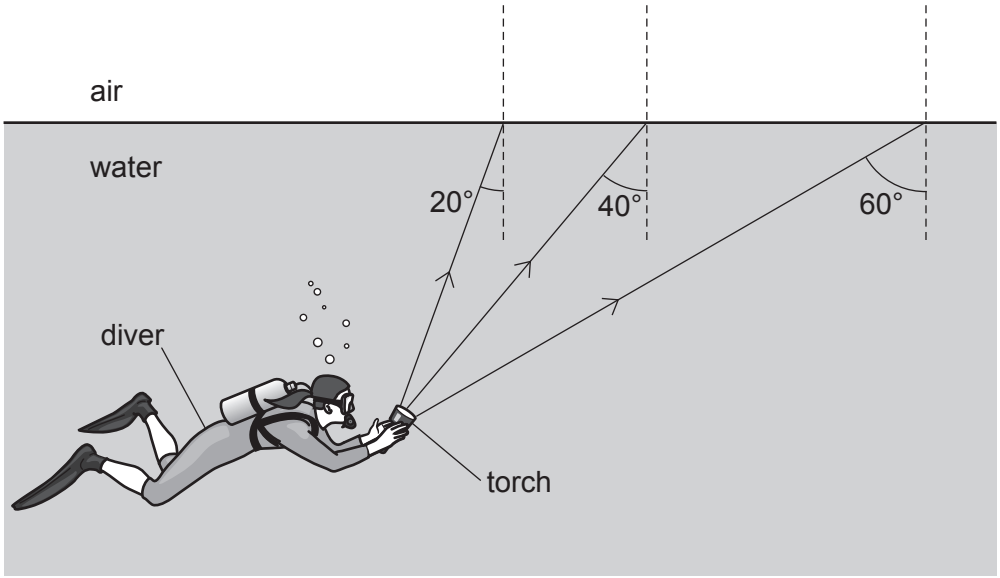

Fig. 6.1

View solution

(a) State the name of the dashed lines in Fig. 6.1.

..... [1]

View solution

(b) The critical angle for red light travelling from water into air is 48°.

(i) State the meaning of the term critical angle.

.....

..... [2]

(ii) On Fig. 6.1, draw the path of each ray after it reaches the water–air boundary. [3]

[Total: 6]

View solution

7 This question is about the following **four** types of wave.

infrared **microwaves** **ultrasound** **radio waves**

(a) Answer the questions, choosing words from this list.

View solution

(i) State which of the types of wave are electromagnetic.

..... [1]

(ii) State which type of electromagnetic wave has the longest wavelength.

..... [1]

(iii) State **two** types of wave that can travel through a vacuum.

..... [1]

(iv) State which of the types of wave is used to produce an image of an unborn baby.

..... [1]

(b) State **two** uses for infrared waves.

View solution

1. .....

2. .....

[2]

(c) Indicate whether the types of wave in Table 7.1 are transverse or longitudinal.

View solution

Show your answer for each type of wave by placing a tick (✓) in **one** column.

Complete all the rows in Table 7.1.

Table 7.1

type of wave	transverse	longitudinal
infrared		
microwaves		
ultrasound		
radio waves		

[2]

[Total: 8]

8 **(a)** The device in Fig. 8.1 is connected to a 240 V mains supply.

The device produces a potential difference (p.d.) of 12 V between A and B.

A 12 V lamp is connected between A and B.

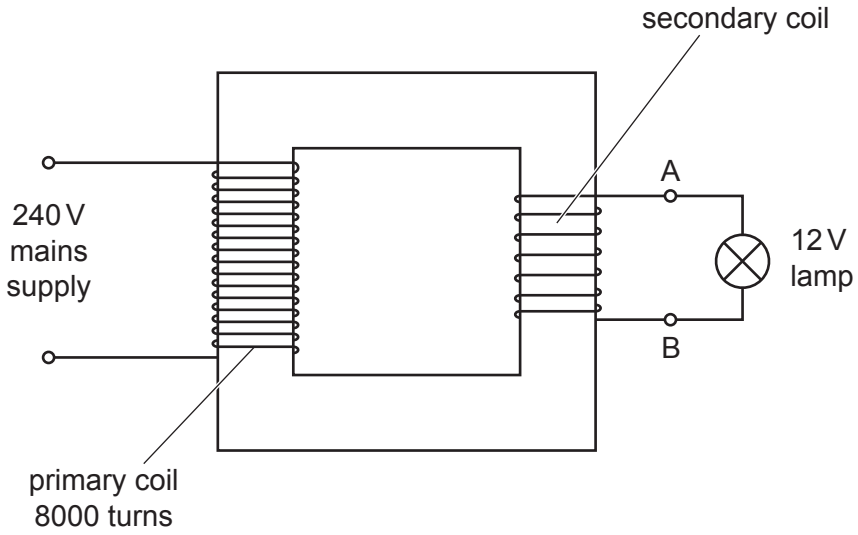

Fig. 8.1

(i) Calculate the number of turns on the secondary coil. Use information from Fig. 8.1.

number of turns = ... [3]

(ii) State the name of the device shown in Fig. 8.1.

View solution

..... [1]

(iii) The device includes two coils.

State the material used for the coils.

View solution

..... [1]

(b) The 12 V lamp is disconnected.

Two 6.0 V lamps and a 12 V motor are connected between A and B. The p.d. across each lamp is 6.0 V and the p.d. across the motor is 12 V.

View solution

Draw on Fig. 8.2 to show how to connect the lamps and the motor between A and B.



Fig. 8.2 [3]

[Total: 8]

9 The circuit in Fig. 9.1 shows two resistors, a battery, a voltmeter and a switch connected by metal wires.

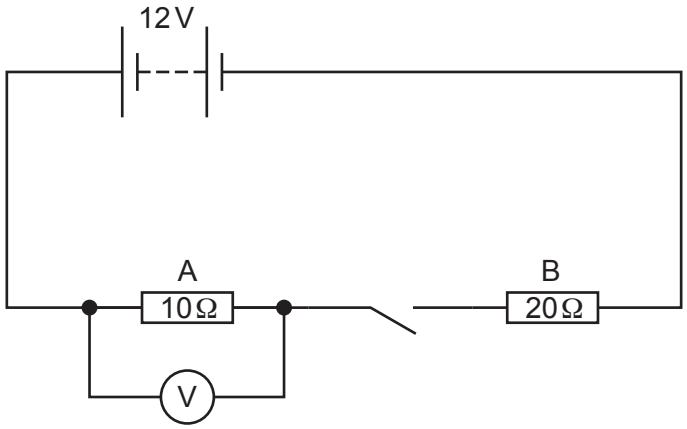

Fig. 9.1

(a) State a quantity that a voltmeter measures.

View solution

..... [1]

(b) The switch is closed. There is a current in the circuit.

View solution

(i) State the name of the type of particle that flows in the metal wires.

..... [1]

(ii) State the name of an instrument that measures electric current.

View solution

..... [1]

(c) The reading on the voltmeter is 4.0 V.

View solution

(i) Calculate the current in the 10 Ω resistor.

current = ... A [3]

(ii) Determine the current in the 20 Ω resistor.

View solution

current = ... A [1]

(iii) The 10 Ω resistor is replaced by a 15 Ω resistor **and** the 20 Ω resistor is also replaced by a 15 Ω resistor.

State the effect, if any, on the current in the circuit. Explain your answer.

View solution

.....

..... [2]

[Total: 9]

© UCLES 2022

10 **(a)** State the names of **three** types of radioactive emission.

View solution

1. .....

2. .....

3. .....

[3]

(b) In nuclide notation, $^{35}_{17}Cl$ represents one nuclide of chlorine.

View solution

For one neutral atom of $^{35}_{17}Cl$, state:

(i) the nucleon number ..... [1]

(ii) the proton number ..... [1]

(iii) the number of neutrons. ..... [1]

(c) Complete the sentence:

In a neutral atom, the number of protons is equal to the number of ..... . [1]

[Total: 7]

View solution

BLANK PAGE

Permission to reproduce items where third-party owned material protected by copyright is included has been sought and cleared where possible. Every reasonable effort has been made by the publisher (UCLES) to trace copyright holders, but if any items requiring clearance have unwittingly been included, the publisher will be pleased to make amends at the earliest possible opportunity.

To avoid the issue of disclosure of answer-related information to candidates, all copyright acknowledgements are reproduced online in the Cambridge Assessment International Education Copyright Acknowledgements Booklet. This is produced for each series of examinations and is freely available to download at www.cambridgeinternational.org after the live examination series.

Cambridge Assessment International Education is part of Cambridge Assessment. Cambridge Assessment is the brand name of the University of Cambridge Local Examinations Syndicate (UCLES), which is a department of the University of Cambridge.

© UCLES 2022