Cambridge Assessment International Education

Cambridge IGCSE™

CANDIDATE NAME									
CENTRE NUMBER						CANDIDATE NUMBER				

PHYSICS **0625/42**

Paper 4 Theory (Extended) **May/June 2022**

1 hour 15 minutes

You must answer on the question paper.

No additional materials are needed.

INSTRUCTIONS

- Answer **all** questions.
- Use a black or dark blue pen. You may use an HB pencil for any diagrams or graphs.
- Write your name, centre number and candidate number in the boxes at the top of the page.
- Write your answer to each question in the space provided.
- Do **not** use an erasable pen or correction fluid.
- Do **not** write on any bar codes.
- You may use a calculator.
- You should show all your working and use appropriate units.
- Take the weight of 1.0 kg to be 10 N (acceleration of free fall = 10 m / s^2).

INFORMATION

- The total mark for this paper is 80.
- The number of marks for each question or part question is shown in brackets [ ].

This document has **16** pages. Any blank pages are indicated.

© UCLES 2022

1 Fig. 1.1 shows an electrically powered bicycle.

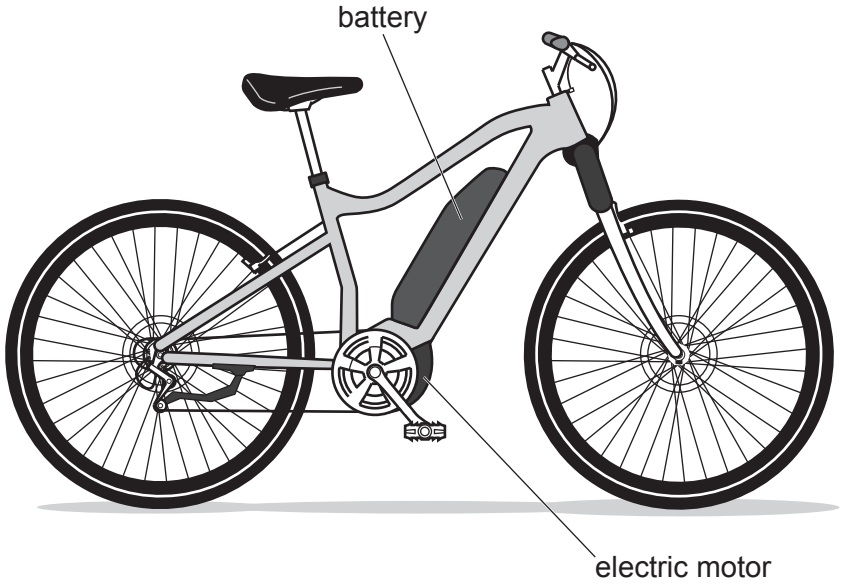

Fig. 1.1

When fully charged, the battery can deliver a power of 600 W for 60 min.

(a) (i) Calculate the energy, in joules, stored in the battery when fully charged.

View solution

energy = ... J [3]

(ii) State the form of energy stored by the battery.

View solution

..... [1]

(b) The bicycle has a motor with an electrical input power of 250 W.

View solution

Calculate the time for which the battery can power the bicycle.

time = ... [2]

(c) Consider this bicycle compared to a small motorcycle.

View solution

State **two** environmental benefits of the electrically powered bicycle.

1. .....

2. .....

[2]

[Total: 8]

© UCLES 2022

2 Fig. 2.1 shows an object of mass 2.0 kg on a bench. This object is connected by a cord, passing over a pulley, to an object of mass 3.0 kg.

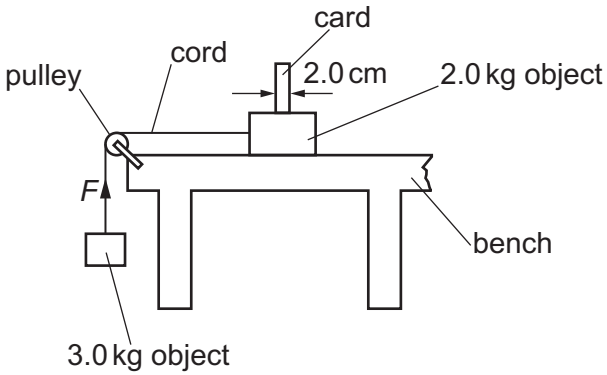

Fig. 2.1

The 2.0 kg object is released from rest and accelerates at 4.0 m / s^2.

(a) Calculate the resultant force acting on the 2.0 kg object.

View solution

force = ... [2]

(b) Calculate the upward force *F* exerted by the cord on the 3.0 kg object.

View solution

force *F* = ... [3]

(c) The objects have a constant acceleration.

View solution

(i) Show that the speed of the objects 0.80 s after release is 3.2 m / s.

[2]

(ii) A card, of width 2.0 cm, is fixed to the 2.0 kg object. As the 2.0 kg object moves to the left, the card passes through a beam of light that is perpendicular to the card.

Using the speed given in **(c)(i)**, calculate the time taken for the card to pass through the beam of light.

View solution

time = ... [2]

[Total: 9]

© UCLES 2022

3 **(a)** Fig. 3.1 shows water in a river moving parallel to the river bank at 4.0 m / s and a canoe travelling in the river.

View solution

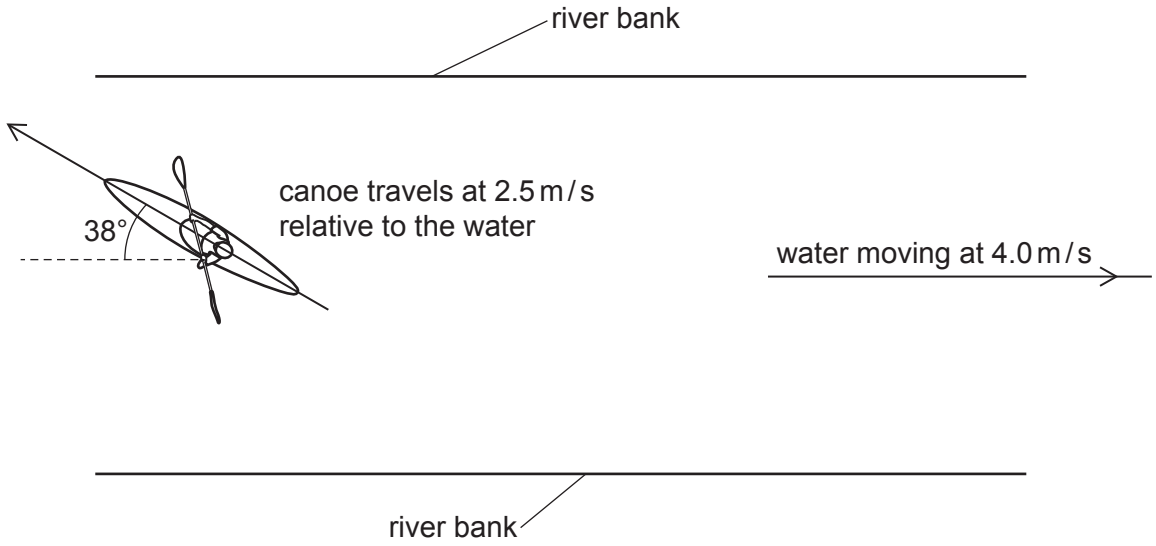

Fig. 3.1

The canoe travels at 2.5 m / s relative to the water and heads at an angle of 38° to the river bank.

Draw a scale diagram to determine the canoe's resultant velocity and state the scale you used.

scale .....

magnitude of resultant velocity .....

direction of resultant velocity (angle from the river bank) .....

[4]

© UCLES 2022

(b) The mass of the canoeist is 65 kg.

Calculate her kinetic energy when travelling on still water at 2.5 m / s.

View solution

energy = ... [2]

[Total: 6]

© UCLES 2022

4 **(a)** State and explain the **two** features of a liquid-in-glass thermometer that are necessary for linearity.

statement 1 .....

explanation .....

statement 2 .....

explanation .....

[4]

(b) The value of the heat capacity of the hot junction of a thermocouple thermometer is important in ensuring that it can measure temperature changes very rapidly.


View solution

Explain why.

.....

.....

.....

..... [2]

(c) The hot junction of a thermocouple thermometer has a heat capacity of 0.11 J / °C.

Calculate the thermal energy required to increase the temperature of the hot junction from 20 °C to 345 °C.


View solution

energy = ... [3]

[Total: 9]

5 Sound waves are longitudinal and electromagnetic waves are transverse.

(a) A sound wave used for a medical examination has a frequency of 1.5 MHz.

View solution

(i) State and explain what type of sound wave this is.

.....

..... [2]

(ii) The wave travels through soft human tissue at a speed of 1.3 km / s.

View solution

Calculate the wavelength of the wave in soft human tissue.

wavelength = ... [3]

(b) Describe **one** use of X-rays in medicine.

View solution

.....

..... [2]

[Total: 7]

6 Fig. 6.1 is a full-size ray diagram showing the formation of an image by a thin glass lens.

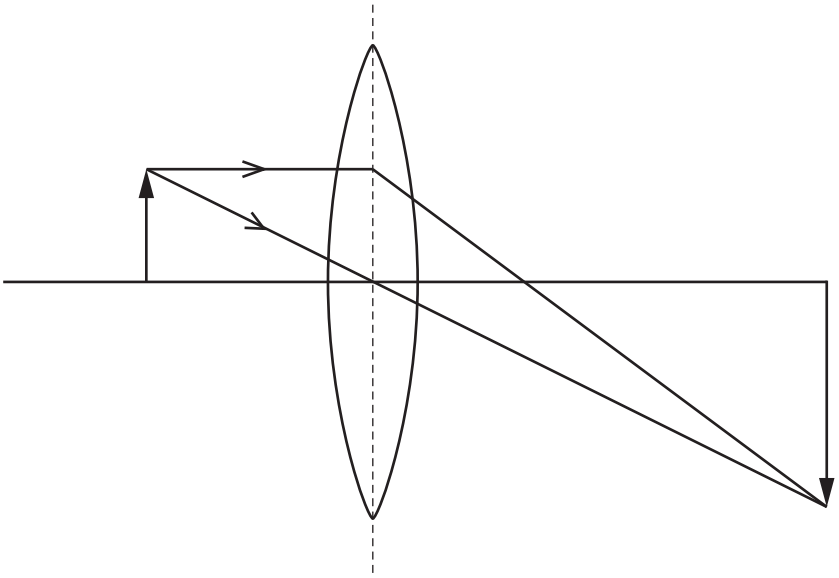

Fig. 6.1 (full size)

(a) Determine the focal length of the lens.

View solution

focal length = ... [1]

(b) Circle **three** items in the list which describe the nature of the image formed.

View solution

enlarged	**same size**	**diminished**	**inverted**
upright	**real**	**virtual**	

[3]

(c) State **one** feature of a virtual image.

..... [1]

[Total: 5]

View solution

© UCLES 2022

BLANK PAGE

7 Fig. 7.1 shows a small plotting compass which is aligned with the magnetic field between magnetic poles A and B of a U-shaped magnet.

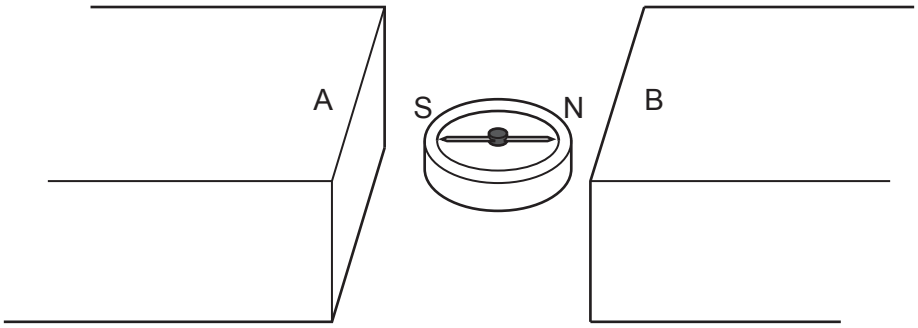

Fig. 7.1

(a) State the polarity of the poles.

View solution

pole A .....

pole B .....

[1]

(b) Fig. 7.2 shows a wire, placed between two poles, carrying a current in the direction of the arrow.

View solution

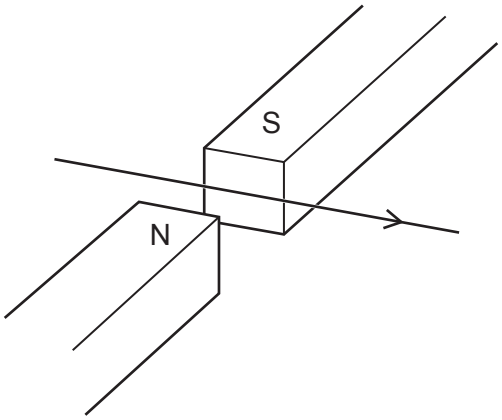

Fig. 7.2

On Fig. 7.2, draw an arrow to show the direction of the force on the wire due to the magnetic field. [2]

(c) Fig. 7.3 shows a β-particle moving in the direction of the arrow between the same two poles.

View solution

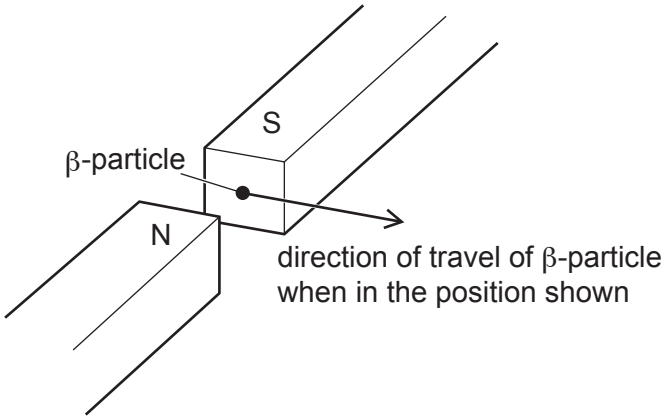

Fig. 7.3

On Fig. 7.3, draw an arrow to show the direction of the force on the β-particle due to the magnetic field. [2]

[Total: 5]

© UCLES 2022

8 Fig. 8.1 shows how the electromotive force (e.m.f.) of a 60 Hz alternating current (a.c.) power supply varies with time.

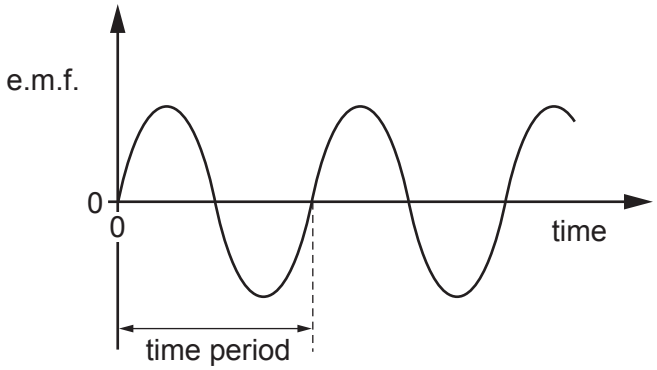

Fig. 8.1

(a) Calculate the time period of the a.c.

View solution

time period = ... [1]

(b) Fig. 8.2 shows this power supply connected in a circuit.

View solution

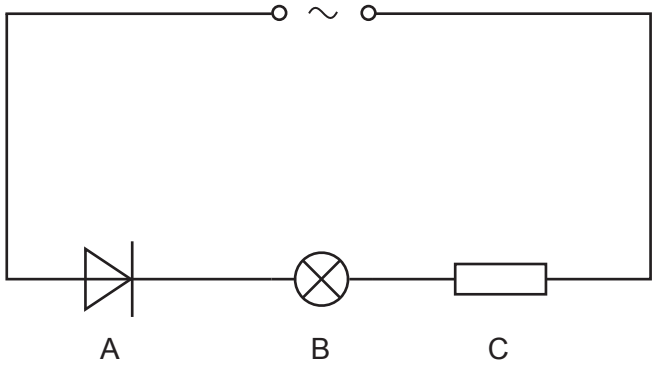

Fig. 8.2

(i) State the name of component A.

..... [1]

(ii) In each time period of the a.c., 1.5×10^{17} electrons pass through component A. The charge on an electron is 1.6×10^{-19} C.

Calculate the average current in the circuit during one time period.

View solution

current = ... [3]

© UCLES 2022

(c) On Fig. 8.3:

View solution

1. mark, with an arrow labelled E, the direction of the electron flow through component B

2. mark, with an arrow labelled I, the direction of the conventional current in component C.

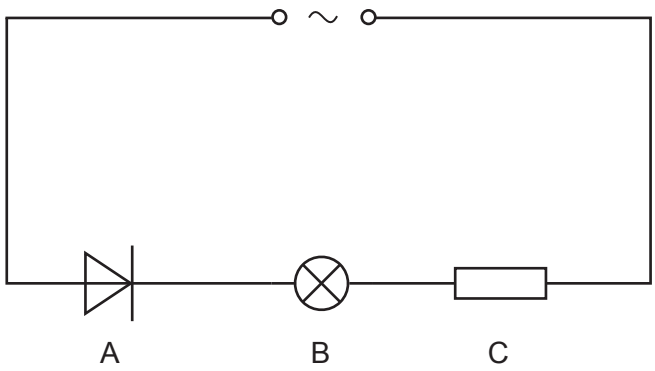

Fig. 8.3

[2]

(d) Fig. 8.4 shows a circuit with components B and C connected to a direct current (d.c.) power supply of e.m.f. 12 V.

View solution

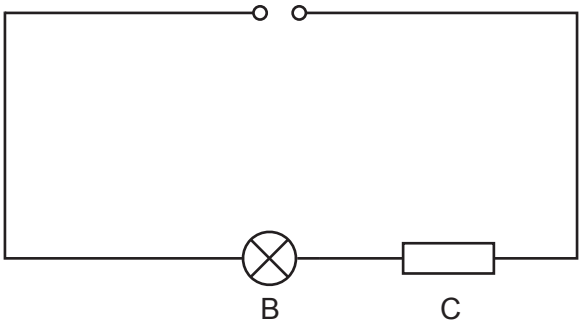

Fig. 8.4

The current in the circuit is 0.35 A.

Calculate the power delivered by the power supply to the circuit.

power = ... [2]

[Total: 9]

9 Fig. 9.1 shows a circuit with a 3-position switch.

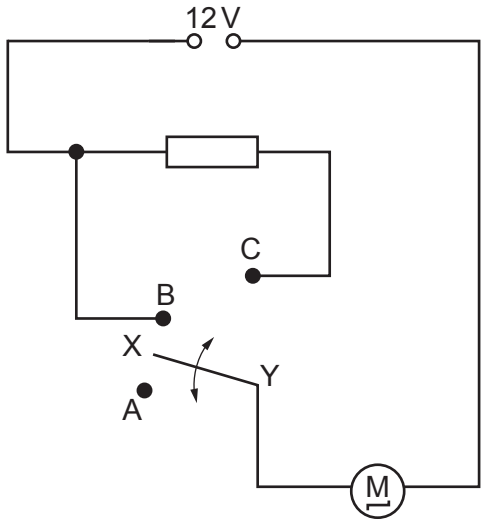

Fig. 9.1

The moving part of the switch is always connected to point Y around which it pivots. The other end of the moving part, labelled X, can be connected to one of the points A, B or C.

(a) The resistance of the motor is 2.0 Ω and the resistance of the resistor is 3.0 Ω.

Determine the current in the motor when the switch is connected to:

(i) point A

current = ... [1]

(ii) point B

current = ... [2]

(iii) point C.

current = ... [2]

(b) Two resistors of resistance 2.0 Ω and 3.0 Ω are connected in parallel.

Calculate the combined resistance of the resistors in this arrangement.

resistance = ... [3]

[Total: 8]

10 Fig. 10.1 is a simplified diagram of a digital circuit. The output of logic gate Y controls a buzzer.

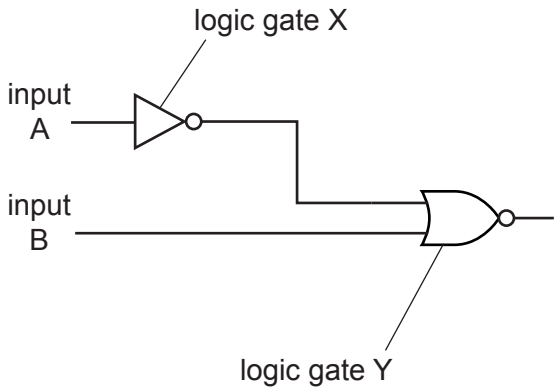

Fig. 10.1

(a) Complete Table 10.1, the truth table for the circuit.

View solution

Table 10.1

input A	input B	output of X	output of Y
0	0		
0	1		
1	0		
1	1		

[3]

(b) Input A is the output of a humidity sensor which gives logic 1 when the humidity is high and logic 0 when the humidity is low.

Input B is the output of a light sensor which gives logic 1 in bright light and logic 0 in darkness. The buzzer sounds when the output of Y is logic 1.

State the conditions of humidity and light when the buzzer is on.

View solution

..... [1]

(c) The output of the digital circuit alone is **not** able to operate the buzzer.

Ring the component from the list that must be connected between the output of the digital circuit and the buzzer.

fuse **heater** **relay** **resistor** **thermistor**

View solution

Explain your answer.

.....

.....

[3]

[Total: 7]

© UCLES 2022

11 **(a)** Fig. 11.1 shows the paths of three α-particles moving towards a thin gold foil. Four gold nuclei are shown.

View solution

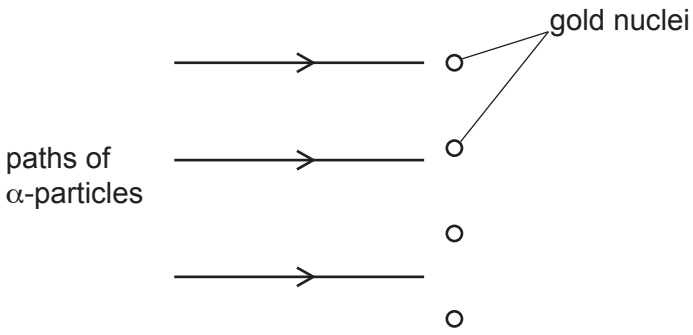

Fig. 11.1 (not to scale)

(i) On Fig. 11.1, complete the paths of the **three** α-particles. [3]

(ii) State the sign of the charge on the α-particles.

View solution

..... [1]

(b) The nuclide notation for a nucleus of gold-198 is $^{198}_{79}\mathrm{Au}$.

View solution

State the numbers of electrons, neutrons and protons in a neutral atom of gold-198.

number of electrons = ...

number of neutrons = ...

number of protons = ...

[3]

[Total: 7]

Permission to reproduce items where third-party owned material protected by copyright is included has been sought and cleared where possible. Every reasonable effort has been made by the publisher (UCLES) to trace copyright holders, but if any items requiring clearance have unwittingly been included, the publisher will be pleased to make amends at the earliest possible opportunity.

To avoid the issue of disclosure of answer-related information to candidates, all copyright acknowledgements are reproduced online in the Cambridge Assessment International Education Copyright Acknowledgements Booklet. This is produced for each series of examinations and is freely available to download at www.cambridgeinternational.org after the live examination series.

Cambridge Assessment International Education is part of Cambridge Assessment. Cambridge Assessment is the brand name of the University of Cambridge Local Examinations Syndicate (UCLES), which is a department of the University of Cambridge.

© UCLES 2022