Cambridge Assessment International Education

Cambridge IGCSE™

CANDIDATE NAME									
CENTRE NUMBER						CANDIDATE NUMBER				

PHYSICS **0625/51**

Paper 5 Practical Test **May/June 2022**

1 hour 15 minutes

You must answer on the question paper.

You will need: The materials and apparatus listed in the confidential instructions

INSTRUCTIONS

- Answer **all** questions.
- Use a black or dark blue pen. You may use an HB pencil for any diagrams or graphs.
- Write your name, centre number and candidate number in the boxes at the top of the page.
- Write your answer to each question in the space provided.
- Do **not** use an erasable pen or correction fluid.
- Do **not** write on any bar codes.
- You may use a calculator.
- You should show all your working and use appropriate units.

INFORMATION

- The total mark for this paper is 40.
- The number of marks for each question or part question is shown in brackets [ ].

For Examiner's Use	
1	
2	
3	
4	
Total	

This document has **16** pages. Any blank pages are indicated.

© UCLES 2022

1 In this experiment, you will investigate the stretching of a spring.

Carry out the following instructions, referring to Fig. 1.1.

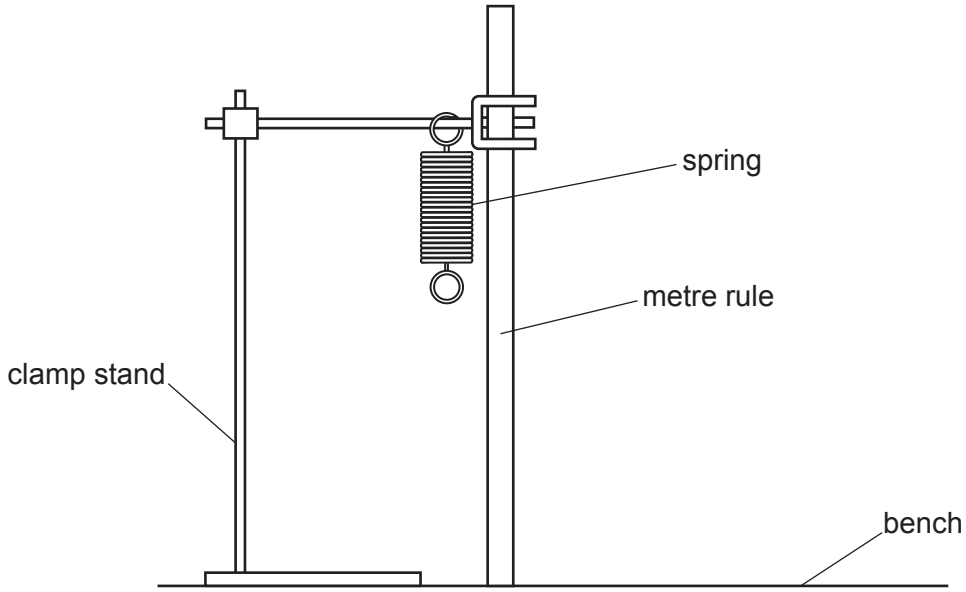

Fig. 1.1

(a) The metre rule is clamped in position close to the spring. Do **not** change the position of the metre rule.

(i) Take two readings from the metre rule to determine the unstretched length l_0 of the coiled part of the spring. Use the set square provided.

reading 1 ..... cm

reading 2 ..... cm

l_0 = ... cm

[3]

View solution

(ii) Draw a diagram to show clearly how you used the set square to obtain an accurate reading from the metre rule.

View solution

[1]

(b) Suspend a load of P = 1.0 N from the spring.

View solution

Record the new length l_1 of the coiled part of the spring.

l_1 = ... cm

Calculate the extension e_1 using the equation $e_1 = (l_1 - l_0)$.

e_1 = ... cm

Calculate a value for the spring constant k of the spring using the equation

$$k = \frac{P}{e_1}.$$

Include the unit.

k = ...

[2]

(c) Suspend a load of P = 5.0 N from the spring.

View solution

Record the new length l_5 of the coiled part of the spring.

l_5 = ... cm

Calculate the extension e_5 using the equation $e_5 = (l_5 - l_0)$.

e_5 = ... cm

Calculate a second value for the spring constant k of the spring using the equation

$$k = \frac{P}{e_5}.$$

Include the unit.

k = ...

[2]

© UCLES 2022

(d) State whether your two values of the spring constant k can be considered equal within the limits of experimental accuracy.

View solution

Explain your answer by referring to your results.

statement .....

explanation .....

.....

.....

[1]

(e) A student improves the experiment by taking additional sets of readings.

View solution

(i) Suggest the additional apparatus that the student uses.

.....

..... [1]

(ii) Suggest how the student uses the additional results.

View solution

.....

..... [1]

[Total: 11]

BLANK PAGE

© UCLES 2022

2 In this experiment, you will investigate the cooling of water.

Carry out the following instructions, referring to Fig. 2.1. You are provided with an insulating sleeve to place around the metal can while pouring hot water.

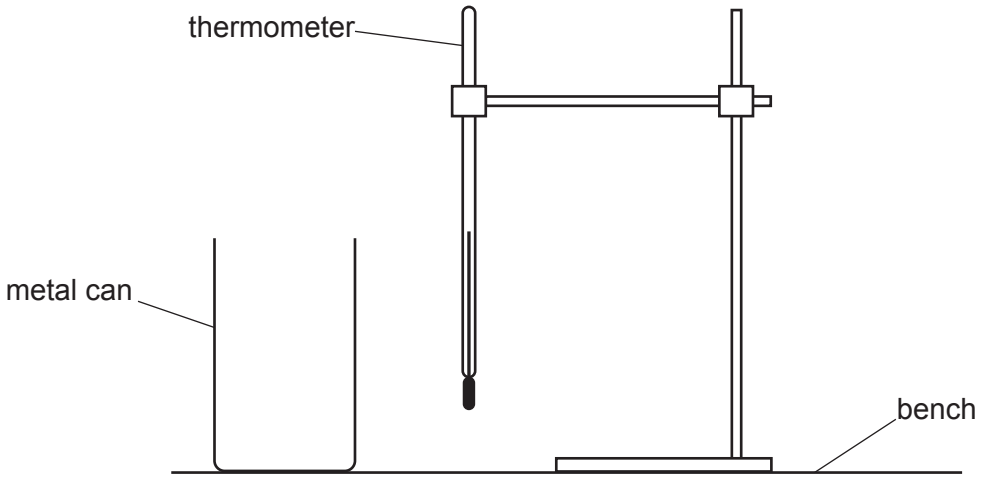

Fig. 2.1

(a) Use the thermometer to measure the room temperature θ_R.

View solution

θ_R = ... [1]

(b) **(i)** Place the insulating sleeve around the can.

Pour hot water into the can until the water level is up to approximately 2 cm from the top. Place the thermometer in the water.

Remove the insulating sleeve.

View solution

Record, in Table 2.1, the temperature θ of the hot water at time t = 0. Immediately start the stop-clock.

Measure, and record in Table 2.1, the water temperature every 30 s until you have 7 sets of readings.

Do **not** empty the can at this stage. [2]

(ii) Complete the column headings in Table 2.1.

View solution

Table 2.1

t/	θ/
0	
30	
60	
90	
120	
150	
180	

[1]

(c) (i) Calculate the decrease in temperature $\Delta\theta_1$ of the hot water between times t = 0 and t = 60 s.

View solution

$\Delta\theta_1$ = ...

Calculate the average rate of cooling R_1 of the water using the equation

$$R_1 = \frac{\Delta\theta_1}{\Delta t},$$

where Δt = 60 s. Include the unit.

R_1 = ... [1]

(ii) Calculate the decrease in temperature $\Delta\theta_2$ of the hot water between times t = 120 s and t = 180 s.

$\Delta\theta_2$ = ...

Calculate the average rate of cooling R_2 of the water using the equation

View solution

$$R_2 = \frac{\Delta\theta_2}{\Delta t},$$

where Δt = 60 s. Include the unit.

R_2 = ...
[1]

© UCLES 2022

(d) A student states that most of the thermal energy lost by the water in the can is by evaporation from the water surface.

Another student states that most of the thermal energy lost by the water in the can is by conduction through the sides of the can.

View solution

The students repeat the experiment twice to investigate the two statements.

Suggest **one** suitable addition to the apparatus for **each** additional experiment.

1. .....

2. .....

[2]

(e) **(i)** Place the insulating sleeve around the can.

View solution

Pour the water from the can into the measuring cylinder.

Measure and record the volume *V* of water.

V = ... cm^3 [1]

(ii) State **two** precautions taken when reading the volume of water in the measuring cylinder in order to obtain an accurate result.

1. .....

2. .....

[2]

[Total: 11]

View solution

BLANK PAGE

3 In this experiment, you will investigate the resistance of a wire.

Carry out the following instructions, referring to Fig. 3.1.

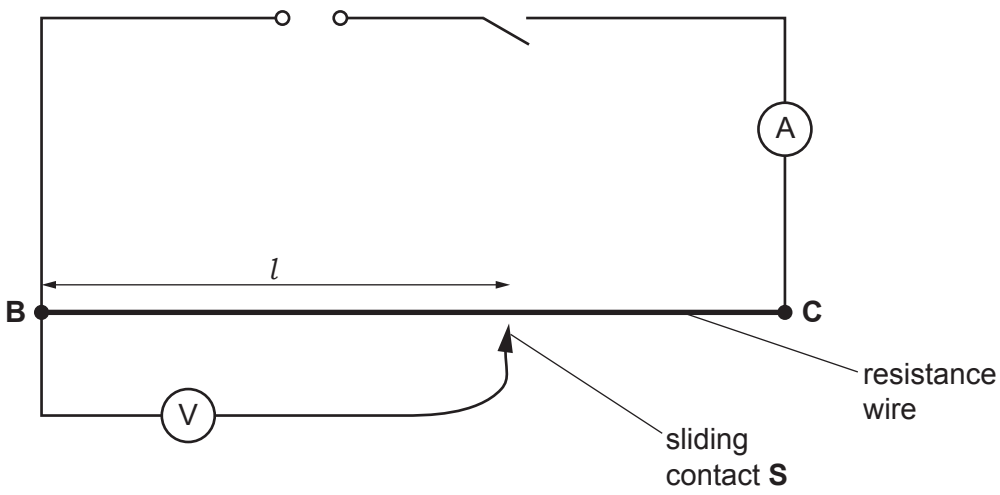

Fig. 3.1

(a) Close the switch.

Measure the current I in the circuit.

I = ... [1]

(b) Place the sliding contact at a distance l = 5.0 cm from **B**.

Measure, and record in Table 3.1, the potential difference (p.d.) V across the length l of resistance wire **BC**.

Open the switch.

Calculate, and record in Table 3.1, the resistance R of 5.0 cm of the resistance wire using the equation

$$R = \frac{V}{I}.$$

Close the switch.

Repeat the procedure in **(b)** using l values of 25.0 cm, 45.0 cm, 65.0 cm and 85.0 cm.

Open the switch.

Table 3.1

l/cm	V/V	R/Ω
5.0		
25.0		
45.0		
65.0		
85.0		

[4]

© UCLES 2022

(c) Plot a graph of R/Ω (y-axis) against l/cm (x-axis). Start both axes at the origin (0,0).

View solution

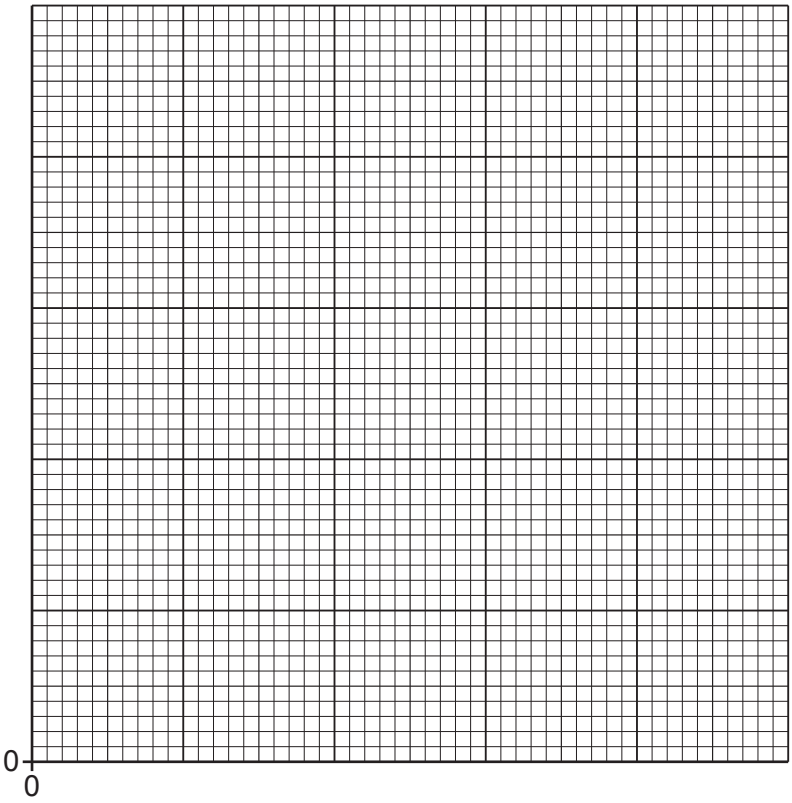

[4]

(d) Use your graph to determine the resistance R_{50} of 50.0 cm of the resistance wire.

View solution

Show clearly on the graph how you obtained the necessary information.

R_{50} = ... Ω

[2]

[Total: 11]

4 A student investigates the force required to break different beams made from a mixture of sand and cement. All the beams have the same cross-section.

View solution

Plan an experiment to investigate the force required to break the beams.

Fig. 4.1 shows the set-up.

You are **not** required to do this investigation.

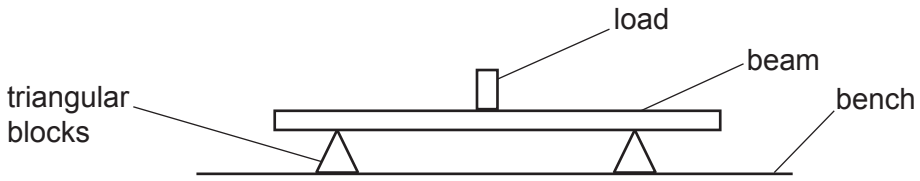

Fig. 4.1

The following apparatus is available:

- a selection of beams made from different ratios of sand and cement and of various lengths
- triangular blocks to support the beams
- a metre rule
- a selection of loads.

You can also use other apparatus and materials that are usually available in a school laboratory.

The student takes all the necessary safety precautions. You are **not** required to write about safety precautions.

In your plan, you should:

- explain briefly how to carry out the investigation (you may add to the diagram if it helps your explanation)
- state the key variables to keep constant
- draw a table, or tables, with column headings, to show how to display your readings (you are **not** required to enter any readings in the table)
- explain how you would use the readings to reach a conclusion.

© UCLES 2022

.....

.....

.....

.....

.....

.....

.....

.....

.....

.....

.....

.....

.....

.....

.....

.....

.....

..... [7]

BLANK PAGE

BLANK PAGE

BLANK PAGE

Permission to reproduce items where third-party owned material protected by copyright is included has been sought and cleared where possible. Every reasonable effort has been made by the publisher (UCLES) to trace copyright holders, but if any items requiring clearance have unwittingly been included, the publisher will be pleased to make amends at the earliest possible opportunity.

To avoid the issue of disclosure of answer-related information to candidates, all copyright acknowledgements are reproduced online in the Cambridge Assessment International Education Copyright Acknowledgements Booklet. This is produced for each series of examinations and is freely available to download at www.cambridgeinternational.org after the live examination series.

Cambridge Assessment International Education is part of Cambridge Assessment. Cambridge Assessment is the brand name of the University of Cambridge Local Examinations Syndicate (UCLES), which is a department of the University of Cambridge.

© UCLES 2022