Cambridge Assessment International Education

Cambridge IGCSE™

CANDIDATE NAME									
CENTRE NUMBER						CANDIDATE NUMBER				

PHYSICS **0625/52**

Paper 5 Practical Test **May/June 2022**

1 hour 15 minutes

You must answer on the question paper.

You will need: The materials and apparatus listed in the confidential instructions

INSTRUCTIONS

- Answer **all** questions.
- Use a black or dark blue pen. You may use an HB pencil for any diagrams or graphs.
- Write your name, centre number and candidate number in the boxes at the top of the page.
- Write your answer to each question in the space provided.
- Do **not** use an erasable pen or correction fluid.
- Do **not** write on any bar codes.
- You may use a calculator.
- You should show all your working and use appropriate units.

INFORMATION

- The total mark for this paper is 40.
- The number of marks for each question or part question is shown in brackets [ ].

For Examiner's Use	
1	
2	
3	
4	
Total	

This document has **12** pages. Any blank pages are indicated.

© UCLES 2022

1 In this experiment, you will investigate the balancing of a metre rule.

Carry out the following instructions, referring to Fig. 1.1.

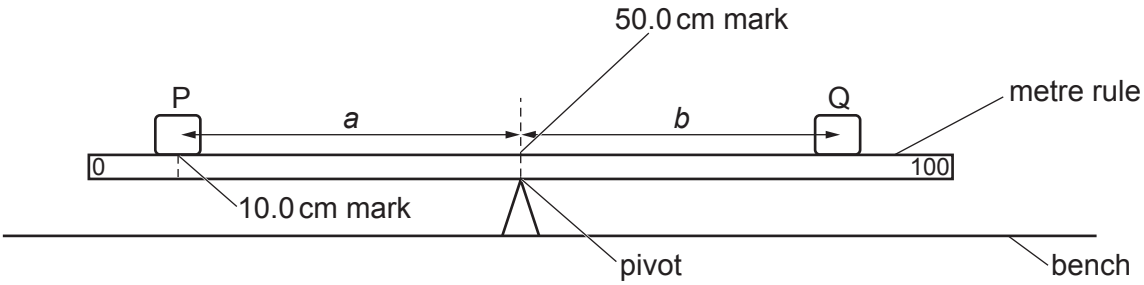

Fig. 1.1

(a) • Place the metre rule on the pivot at the 50.0 cm mark.

View solution

• Place object P with its centre on the metre rule at the 10.0 cm mark.

(i) Record, in Table 1.1, the distance *a* from the centre of object P to the pivot. [1]

(ii) • Place object Q on the metre rule.

View solution

• Keep object P at the 10.0 cm mark and adjust the position of object Q until the metre rule is as close to balancing as possible.

Record, in Table 1.1, the distance *b* between the centre of object Q and the pivot. [1]

(iii) Repeat the steps above with object P placed at the 15.0 cm mark, 20.0 cm mark, 25.0 cm mark and 30.0 cm mark.

Record all the values of *a* and *b* in Table 1.1.

View solution

Table 1.1

a / cm	*b* / cm

[2]

(b) Plot a graph of a / cm (y-axis) against b / cm (x-axis). You do **not** need to start your graph from the origin (0,0).

View solution

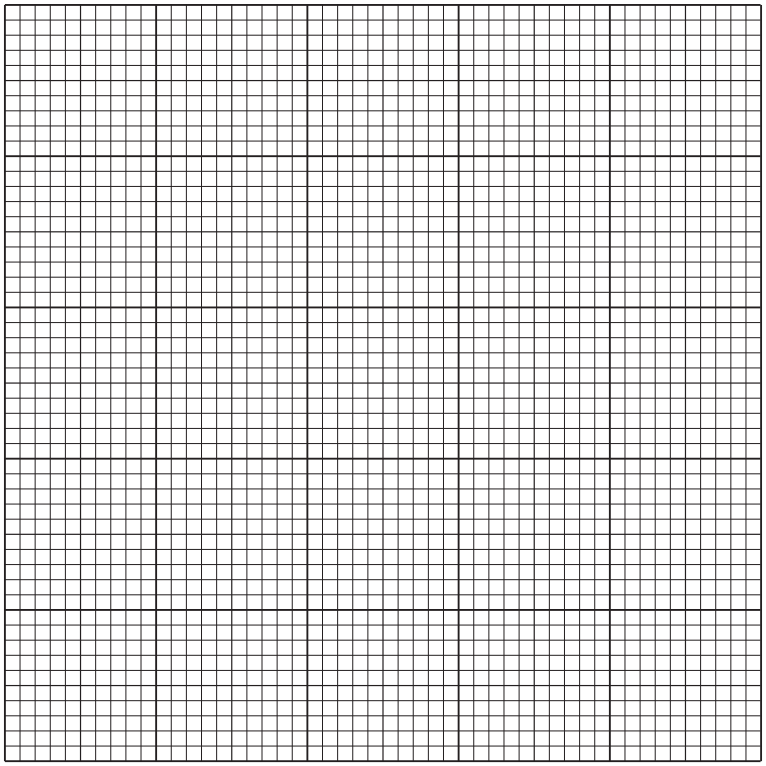

[4]

(c) Determine the gradient G of the graph.

View solution

Show clearly on the graph how you obtained the necessary information.

G = ... [3]

[Total: 11]

© UCLES 2022

2 In this experiment, you will investigate the resistances of combinations of resistors.

Carry out the following instructions, referring to Fig. 2.1. The circuit has been set up for you.

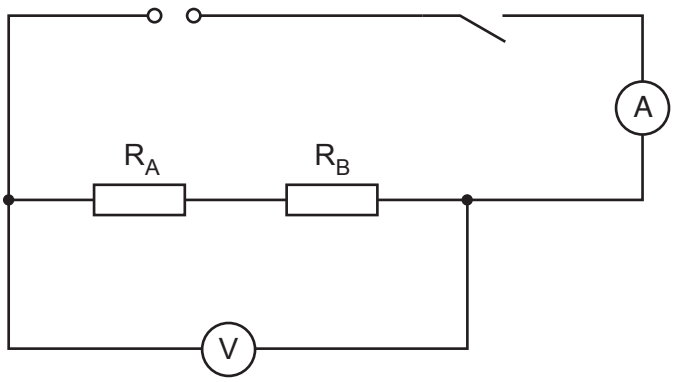

Fig. 2.1

(a) Close the switch.

(i) Measure the current I_1 in the circuit.

I_1 = ... A [1]

(ii) Measure the potential difference (p.d.) V_1 across resistors R_A and R_B in series.

V_1 = ... V [1]

(iii) Open the switch.

Calculate the resistance R_1 of the combination of resistors in series. Use the equation

$$R_1 = \frac{V_1}{I_1}.$$

Include the unit.

R_1 = ... [1]

(b) Disconnect the voltmeter. Connect resistor R_C in parallel with resistors R_A and R_B.

Do **not** change the series combination of resistors R_A and R_B.

Connect the voltmeter across the combination of all three resistors.

© UCLES 2022

(i) Draw a circuit diagram showing the circuit described in **(b)**.

View solution

[2]

(ii) Close the switch.

View solution

Measure the current I_2 in the circuit.

I_2 = ... A

Measure the potential difference V_2 across the combination of the three resistors.

V_2 = ... V

Open the switch.

Calculate the resistance R_2 of the combination of resistors. Use the equation

$$R_2 = \frac{V_2}{I_2}.$$

Include the unit.

R_2 = ...

[2]

(c) Disconnect the voltmeter. Rearrange the resistors to set up the circuit shown in Fig. 2.2.

View solution

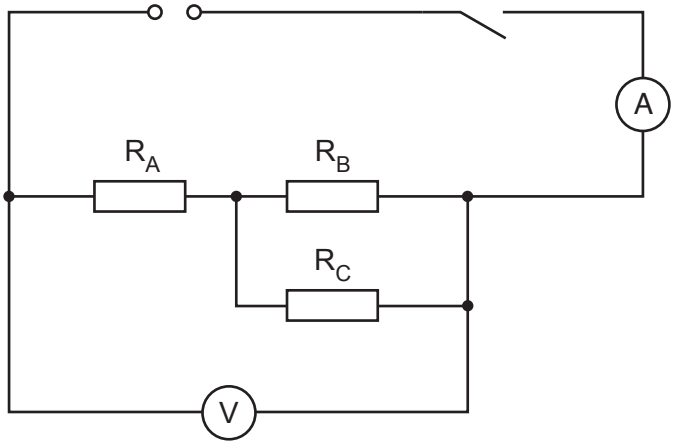

Fig. 2.2

© UCLES 2022

Close the switch.

Measure the current I_3 in the circuit.

I_3 = ... A

Measure the potential difference V_3 across the combination of the three resistors.

V_3 = ... V

Open the switch.

Calculate the resistance R_3 of the combination of resistors. Use the equation

$$R_3 = \frac{V_3}{I_3}.$$

Include the unit. Give your answer to a suitable number of significant figures for this experiment.

R_3 = ...

[2]

(d) A student thinks the three resistors R_A, R_B and R_C have the same resistance within the limits of experimental accuracy.

View solution

Suggest how the student could use the apparatus provided to test his idea.

.....

.....

.....

..... [2]

[Total: 11]

3 In this experiment, you will determine the focal length *f* of a lens.

Carry out the following instructions, referring to Fig. 3.1.

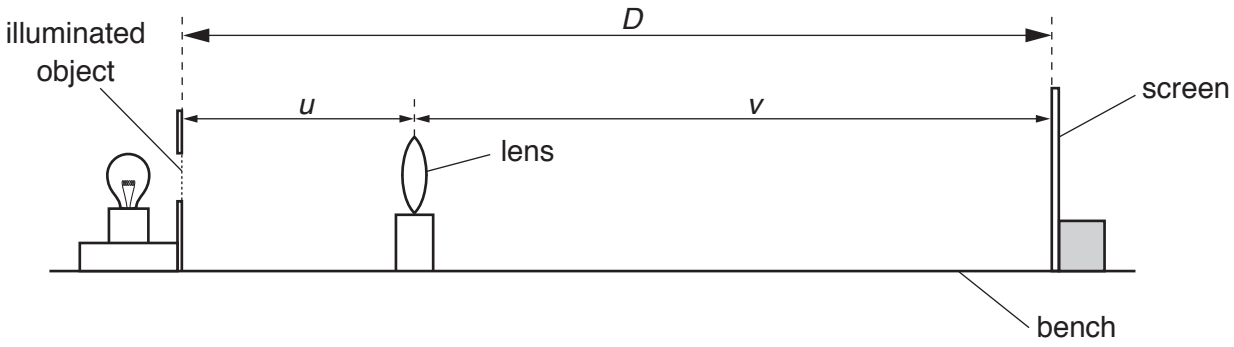

Fig. 3.1

(a) • Place the screen a distance $D = 75.0$ cm from the illuminated object.

• Place the lens between the object and the screen so that the lens is close to the illuminated object.

• Move the lens away from the object until a clearly focused image is formed on the screen.

(i) Measure, and record in Table 3.1, the distance *u* between the centre of the lens and the illuminated object. [1]

(ii) Measure, and record in Table 3.1, the distance *v* between the centre of the lens and the screen. [1]

(iii) Calculate, and record in Table 3.1, the focal length *f* of the lens using the equation

View solution

$$f = \frac{uv}{D}.$$

[1]

(b) • Place the screen at a distance $D = 85.0$ cm from the illuminated object.

• Place the lens between the object and the screen so that the lens is close to the illuminated object.

View solution

• Move the lens until a clearly focused image is formed on the screen.

Measure, and record in Table 3.1, the distance *u* between the centre of the lens and the illuminated object.

Measure, and record in Table 3.1, the distance *v* between the centre of the lens and the screen.

© UCLES 2022

Calculate, and record in Table 3.1, the focal length f of the lens using the equation

$$f = \frac{uv}{D}.$$

Table 3.1

D/cm	u/cm	v/cm	f/cm
75.0			
85.0			

[2]

(c) Calculate the average value f_A of the focal length of the lens. Show your working.

View solution

f_A = ... cm [2]

(d) State **two** precautions that you took to obtain accurate readings in this experiment.

View solution

1. .....

.....

2. .....

.....

[2]

(e) A student states that a more accurate value for the focal length f of the lens can be determined by plotting a graph of uv against D. The gradient of the graph is numerically equal to the focal length.

(i) Suggest a suitable number of sets of readings that the student should take.

View solution

..... [1]

(ii) Explain briefly how this graphical method can give a more accurate value for the focal length.

.....

.....

.....

..... [1]

[Total: 11]

View solution

BLANK PAGE

4 A student investigates insulators.

View solution

Plan an experiment to list insulating discs in order from best insulator to worst insulator.

You are **not** required to carry out this investigation.

The following apparatus is available:

- five discs made from different insulating materials
- a thermometer
- a stop-watch
- a heated metal cylinder (see Fig. 4.1)
- a second metal cylinder with a hole for the thermometer (see Fig. 4.1).

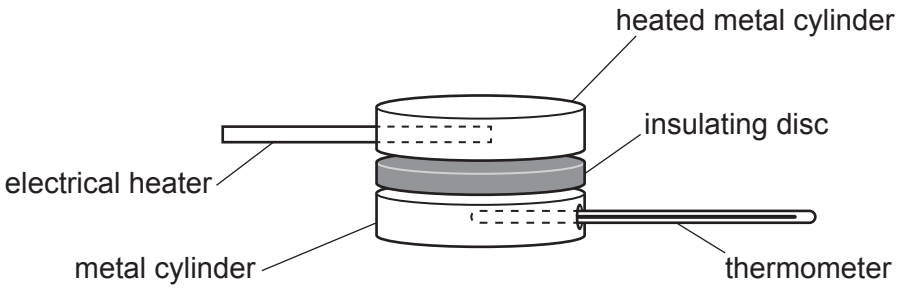

Fig. 4.1

You can also use other apparatus and materials that are usually available in a school laboratory.

In your plan, you should:

- explain briefly how you would carry out the investigation
- state the key variables that you would control
- draw a table, or tables, with column headings, to show how you would display your readings (you are **not** required to enter any readings in the table)
- explain how you would use your readings to reach a conclusion.

© UCLES 2022

.....

.....

.....

.....

.....

.....

.....

.....

.....

.....

.....

.....

.....

.....

.....

.....

.....

..... [7]

BLANK PAGE

Permission to reproduce items where third-party owned material protected by copyright is included has been sought and cleared where possible. Every reasonable effort has been made by the publisher (UCLES) to trace copyright holders, but if any items requiring clearance have unwittingly been included, the publisher will be pleased to make amends at the earliest possible opportunity.

To avoid the issue of disclosure of answer-related information to candidates, all copyright acknowledgements are reproduced online in the Cambridge Assessment International Education Copyright Acknowledgements Booklet. This is produced for each series of examinations and is freely available to download at www.cambridgeinternational.org after the live examination series.

Cambridge Assessment International Education is part of Cambridge Assessment. Cambridge Assessment is the brand name of the University of Cambridge Local Examinations Syndicate (UCLES), which is a department of the University of Cambridge.

© UCLES 2022