Cambridge Assessment International Education

Cambridge IGCSE™

CANDIDATE NAME									
CENTRE NUMBER						CANDIDATE NUMBER				

PHYSICS **0625/62**

Paper 6 Alternative to Practical **May/June 2022**

1 hour

You must answer on the question paper.

No additional materials are needed.

INSTRUCTIONS

- Answer **all** questions.
- Use a black or dark blue pen. You may use an HB pencil for any diagrams or graphs.
- Write your name, centre number and candidate number in the boxes at the top of the page.
- Write your answer to each question in the space provided.
- Do **not** use an erasable pen or correction fluid.
- Do **not** write on any bar codes.
- You may use a calculator.
- You should show all your working and use appropriate units.

INFORMATION

- The total mark for this paper is 40.
- The number of marks for each question or part question is shown in brackets [ ].

This document has **12** pages. Any blank pages are indicated.

© UCLES 2022

1 A student investigates the balancing of a metre rule.

Fig. 1.1 shows the apparatus.

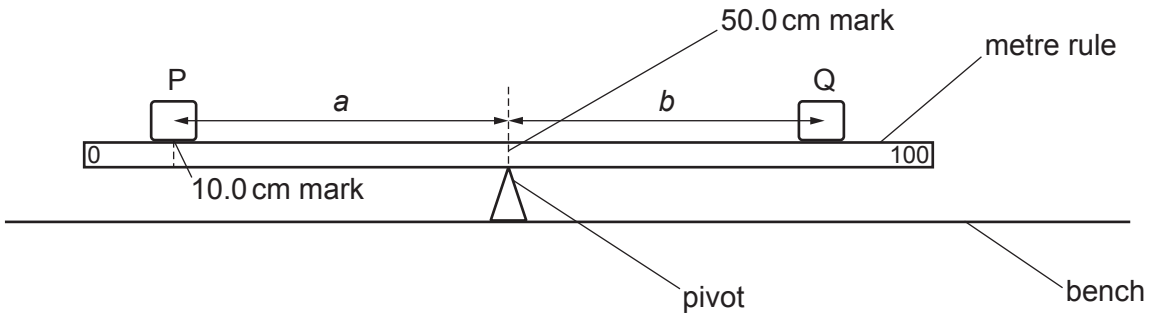

Fig. 1.1

(a) The student places the metre rule on the pivot at the 50.0 cm mark.

She places object P with its centre on the metre rule at the 10.0 cm mark.

The object covers the scale markings on the metre rule, as shown in Fig. 1.2.

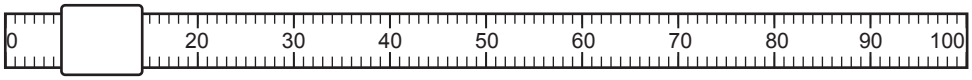

Fig. 1.2

Explain briefly how to place object P as accurately as possible with its centre at the 10.0 cm mark.

You may add to Fig. 1.2, or draw another diagram, to help your explanation.

.....

.....

.....

..... [1]

(b) The student places object Q on the metre rule and adjusts its position until the metre rule is as close to balancing as possible.

View solution

She records the distance a = 40.0 cm between the centre of object P and the pivot.

The centre of object Q is at the 71.2 cm mark.

Determine, and record in Table 1.1, the distance b between the centre of object Q and the pivot. Show your working.

[2]

(c) She repeats the procedure with object P placed at the 15.0 cm mark, 20.0 cm mark, 25.0 cm mark and 30.0 cm mark. All the values of *a* and *b* are shown in Table 1.1.

View solution

Table 1.1

a / cm	*b* / cm
40.0	
35.0	17.8
30.0	15.1
25.0	12.3
20.0	9.7

Plot a graph of *a* / cm (*y*-axis) against *b* / cm (*x*-axis). You do **not** need to start your graph from the origin (0,0).

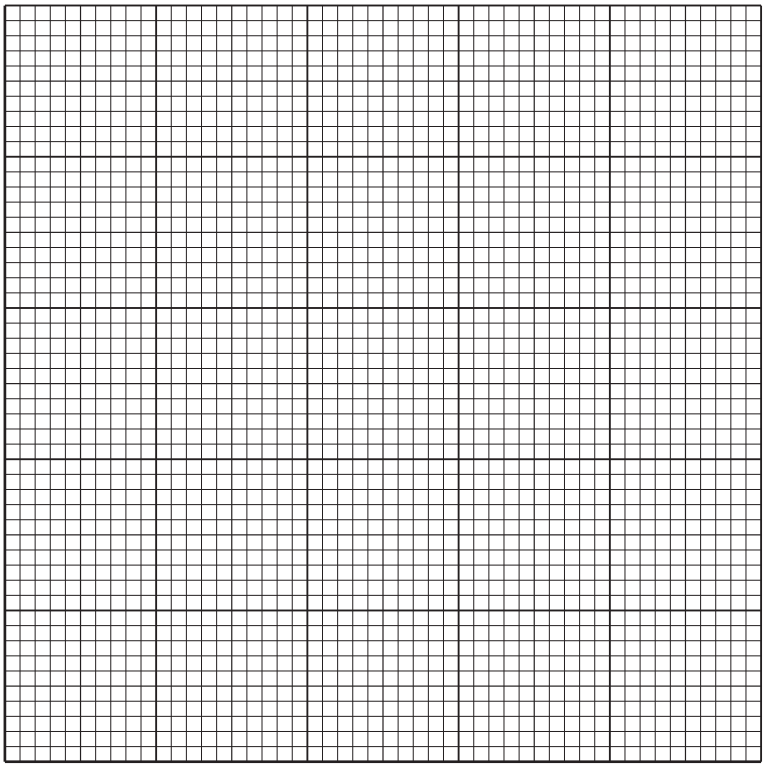

[4]

(d) Determine the gradient *G* of the graph. Show clearly on the graph how you obtained the necessary information.

View solution

G = ... [2]

(e) The gradient *G* of the graph is equal to the ratio of the masses of P and Q.

Record the ratio *R* of the masses of P and Q. Give your answer to a suitable number of significant figures for this experiment.

View solution *R* = ... [2]

[Total: 11]

© UCLES 2022

2 A student investigates the resistances of combinations of resistors.

The first circuit arrangement is shown in Fig. 2.1.

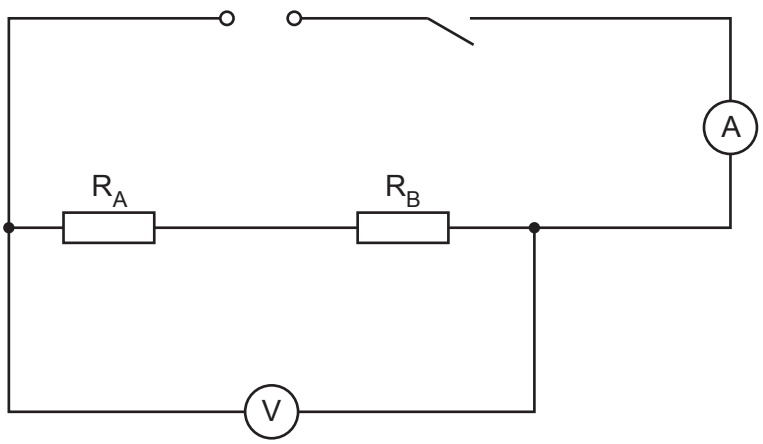

Fig. 2.1

(a) The student measures the current and decides to use a lower current. He adds a variable resistor to the circuit to reduce the current.

On Fig. 2.1, mark with an **X** a suitable position in the circuit for the variable resistor. [1]

View solution

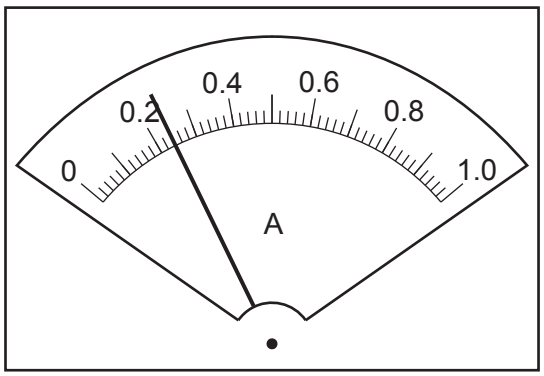

Fig. 2.2

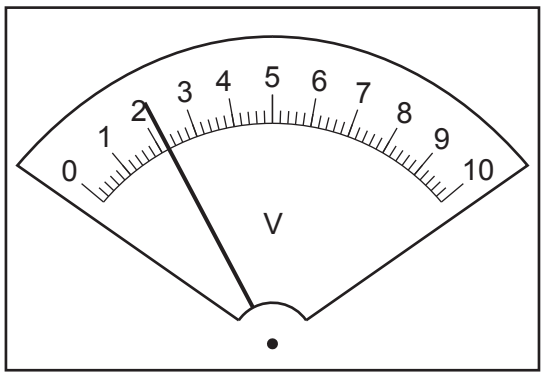

Fig. 2.3

(b) **(i)** The student measures the current I_1 in the circuit. Record the current shown in Fig. 2.2.

I_1 = ...A [1]

(ii) He measures the potential difference (p.d.) V_1 across resistors R_A and R_B in series.

View solution

Record the potential difference V_1 shown in Fig. 2.3.

V_1 = ...V [1]

© UCLES 2022

(c) Calculate the resistance R_1 of the combination of resistors in series. Use the equation

$$R_1 = \frac{V_1}{I_1}.$$

View solution

Include the unit.

R_1 = ... [1]

(d) The student connects a resistor R_C in parallel with resistors R_A and R_B.

View solution

He does **not** change the series combination of resistors R_A and R_B.

He connects the voltmeter across the combination of all three resistors.

(i) Draw a circuit diagram showing the circuit described in **(d)**.

[2]

(ii) The student measures the current I_2 in the circuit.

View solution

I_2 = 0.68 A

He measures the potential difference V_2 across the combination of the three resistors.

V_2 = 2.1 V

Calculate the resistance R_2 of the combination of resistors. Use the equation

$$R_2 = \frac{V_2}{I_2}.$$

Include the unit.

R_2 = ... [1]

© UCLES 2022

(e) The student rearranges the resistors to set up the circuit shown in Fig. 2.4.

View solution

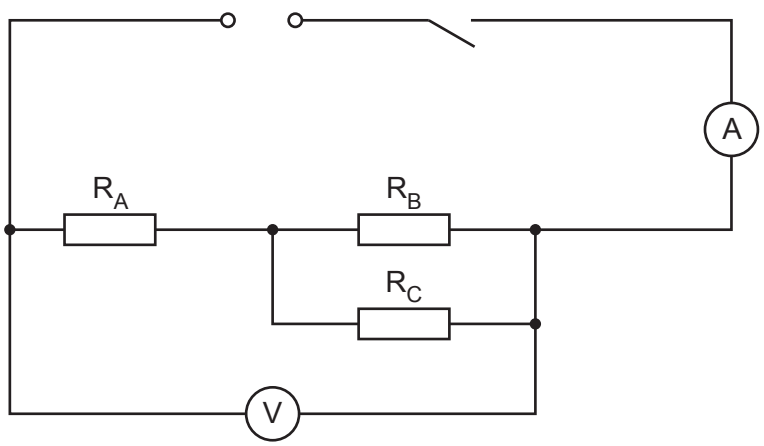

Fig. 2.4

He measures the current I_3 in the circuit.

I_3 = ... 0.29 ..... A

He measures the potential difference V_3 across the combination of the three resistors.

V_3 = ... 2.1 V

Calculate the resistance R_3 of the combination of resistors. Use the equation

$$R_3 = \frac{V_3}{I_3}.$$

Include the unit. Give your answer to a suitable number of significant figures for this experiment.

R_3 = ... [1]

(f) A student thinks the three resistors R_A, R_B and R_C have the same resistance within the limits of experimental accuracy.

View solution

(i) Suggest how the student could use the apparatus provided to test his idea.

.....

.....

.....

..... [2]

(ii) Explain how the student can decide whether the values of resistance are the same within the limits of experimental accuracy.

.....

.....

..... [1]

[Total: 11]

© UCLES 2022

3 A student determines the focal length *f* of a lens.

Fig. 3.1 shows the set-up.

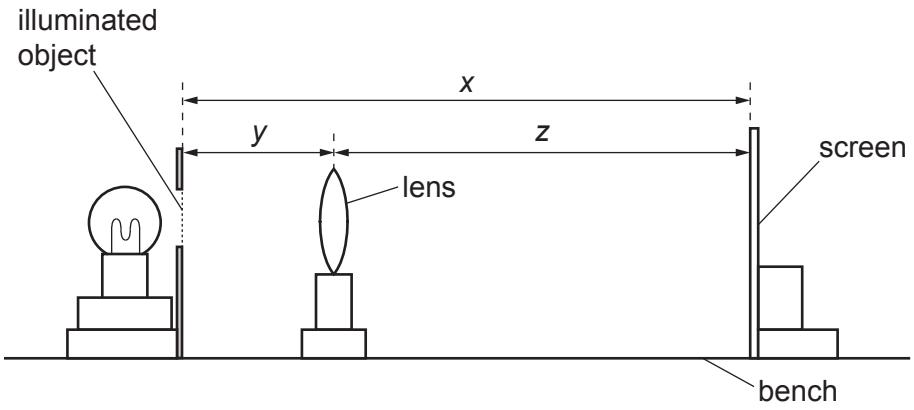

Fig. 3.1

(a) (i) On Fig. 3.1, measure the distance *x* from the screen to the illuminated object.

View solution

x = ...

Fig. 3.1 is drawn to scale. The actual distance *D* between the illuminated object and the screen is 75.0 cm.

She places the lens between the object and the screen so that the lens is close to the illuminated object.

She moves the lens away from the object until a clearly focused image is formed on the screen.

On Fig. 3.1, measure the distance *y* between the centre of the lens and the illuminated object.

y = ...

On Fig. 3.1, measure the distance *z* between the centre of the lens and the screen.

z = ...
[2]

Table 3.1

D / cm	*u* / cm	*v* / cm	*f* / cm
75.0			
85.0	19.1	64.1	14.4

© UCLES 2022

(ii) Calculate, and record in Table 3.1, the actual distance u between the centre of the lens and the illuminated object.

Calculate, and record in Table 3.1, the actual distance v between the centre of the lens and the screen.

[1]

(iii) Calculate, and record in Table 3.1, the focal length f of the lens using the equation

$$f = \frac{uv}{D}.$$

[1]

(b) The student places the screen at a distance D = 85.0 cm from the illuminated object.

She repeats the procedure described in **(a)**. The results are shown in Table 3.1.

Calculate the average value f_A of the focal length of the lens. Show your working.

f_A = ... cm [2]

(c) State **two** precautions that you would take to obtain accurate readings in this experiment.

1. .....

.....

2. .....

.....

[2]

(d) A student states that a more accurate value for the focal length f of the lens can be determined by plotting a graph of uv against D. The gradient of the graph is numerically equal to the focal length.

(i) Suggest a suitable number of sets of readings that the student should take.

..... [1]

(ii) Explain briefly how this graphical method can give a more accurate value for the focal length.

.....

.....

.....

[2]

[Total: 11]

View solution

4 A student investigates insulators.

View solution

Plan an experiment to list insulating discs in order from best insulator to worst insulator.

The following apparatus is available:

- five discs made from different insulating materials
- a thermometer
- a stop-watch
- a heated metal cylinder (see Fig. 4.1)
- a second metal cylinder with a hole for the thermometer (see Fig. 4.1).

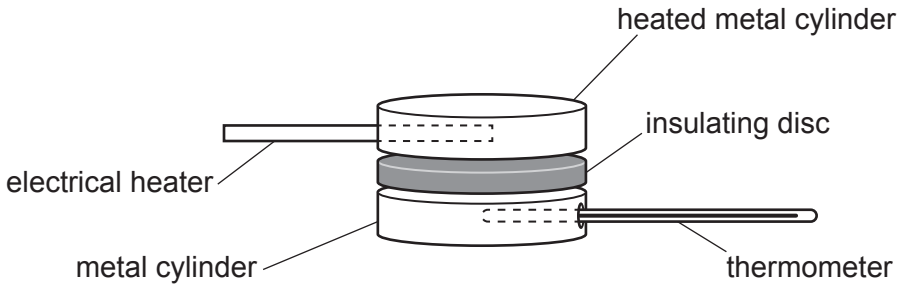

Fig. 4.1

You can also use other apparatus and materials that are usually available in a school laboratory.

In your plan, you should:

- explain briefly how you would carry out the investigation
- state the key variables that you would control
- draw a table, or tables, with column headings, to show how you would display your readings (you are **not** required to enter any readings in the table)
- explain how you would use your readings to reach a conclusion.

© UCLES 2022

.....

.....

.....

.....

.....

.....

.....

.....

.....

.....

.....

.....

.....

.....

.....

.....

.....

.....

.....

..... [7]

BLANK PAGE

Permission to reproduce items where third-party owned material protected by copyright is included has been sought and cleared where possible. Every reasonable effort has been made by the publisher (UCLES) to trace copyright holders, but if any items requiring clearance have unwittingly been included, the publisher will be pleased to make amends at the earliest possible opportunity.

To avoid the issue of disclosure of answer-related information to candidates, all copyright acknowledgements are reproduced online in the Cambridge Assessment International Education Copyright Acknowledgements Booklet. This is produced for each series of examinations and is freely available to download at www.cambridgeinternational.org after the live examination series.

Cambridge Assessment International Education is part of Cambridge Assessment. Cambridge Assessment is the brand name of the University of Cambridge Local Examinations Syndicate (UCLES), which is a department of the University of Cambridge.

© UCLES 2022