Cambridge Assessment International Education

Cambridge IGCSE™

CANDIDATE NAME									
CENTRE NUMBER						CANDIDATE NUMBER				

PHYSICS **0625/63**

Paper 6 Alternative to Practical **May/June 2022**

1 hour

You must answer on the question paper.

No additional materials are needed.

INSTRUCTIONS

- Answer **all** questions.
- Use a black or dark blue pen. You may use an HB pencil for any diagrams or graphs.
- Write your name, centre number and candidate number in the boxes at the top of the page.
- Write your answer to each question in the space provided.
- Do **not** use an erasable pen or correction fluid.
- Do **not** write on any bar codes.
- You may use a calculator.
- You should show all your working and use appropriate units.

INFORMATION

- The total mark for this paper is 40.
- The number of marks for each question or part question is shown in brackets [ ].

This document has **16** pages. Any blank pages are indicated.

© UCLES 2022

1 A student investigates the forces supporting a metre rule.

He uses the apparatus shown in Fig. 1.1. The scale of the metre rule faces upwards.

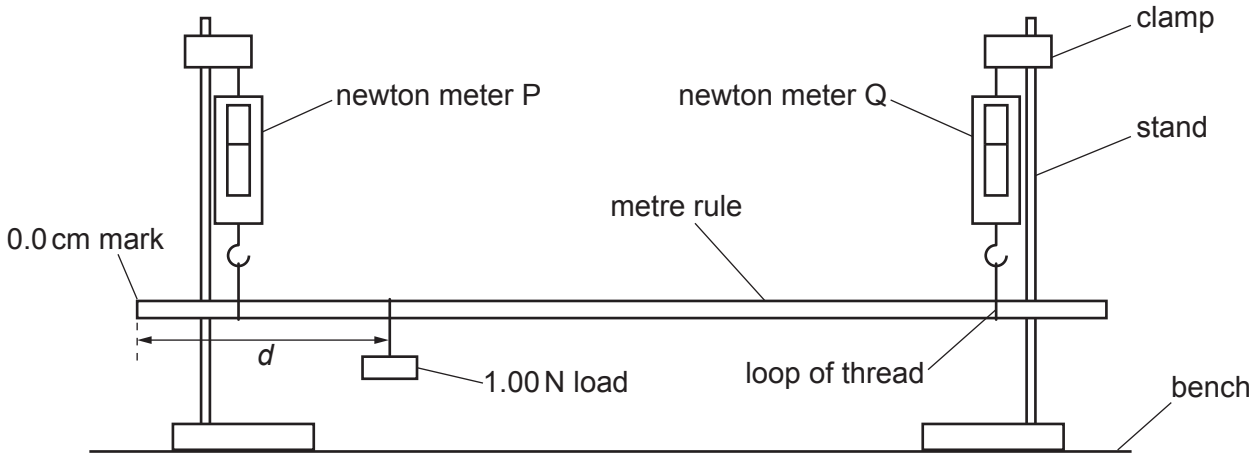

Fig. 1.1

(a) The student ensures that the metre rule is horizontal.

Briefly describe how to check that the rule is horizontal. You may draw a diagram if it helps to explain your answer.

View solution

.....

.....

..... [1]

(b) **(i)** The student sets the distance *d* between the 0.0 cm mark and the 1.00 N load as shown in Fig. 1.1. He moves the thread supporting the 1.00 N load so that it is at the mark on the metre rule shown in Fig. 1.2.

View solution

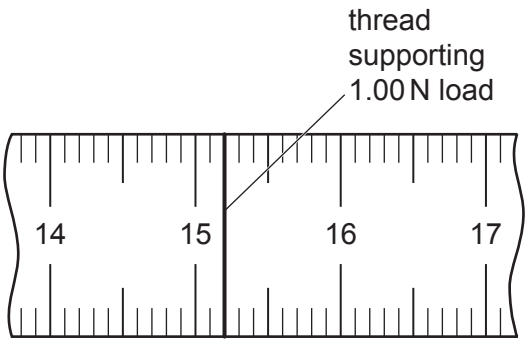

Fig. 1.2

Record the distance *d* indicated on Fig. 1.2.

d = ... cm [1]

(ii) The readings on newton meter P and newton meter Q are shown in Fig. 1.3.

View solution

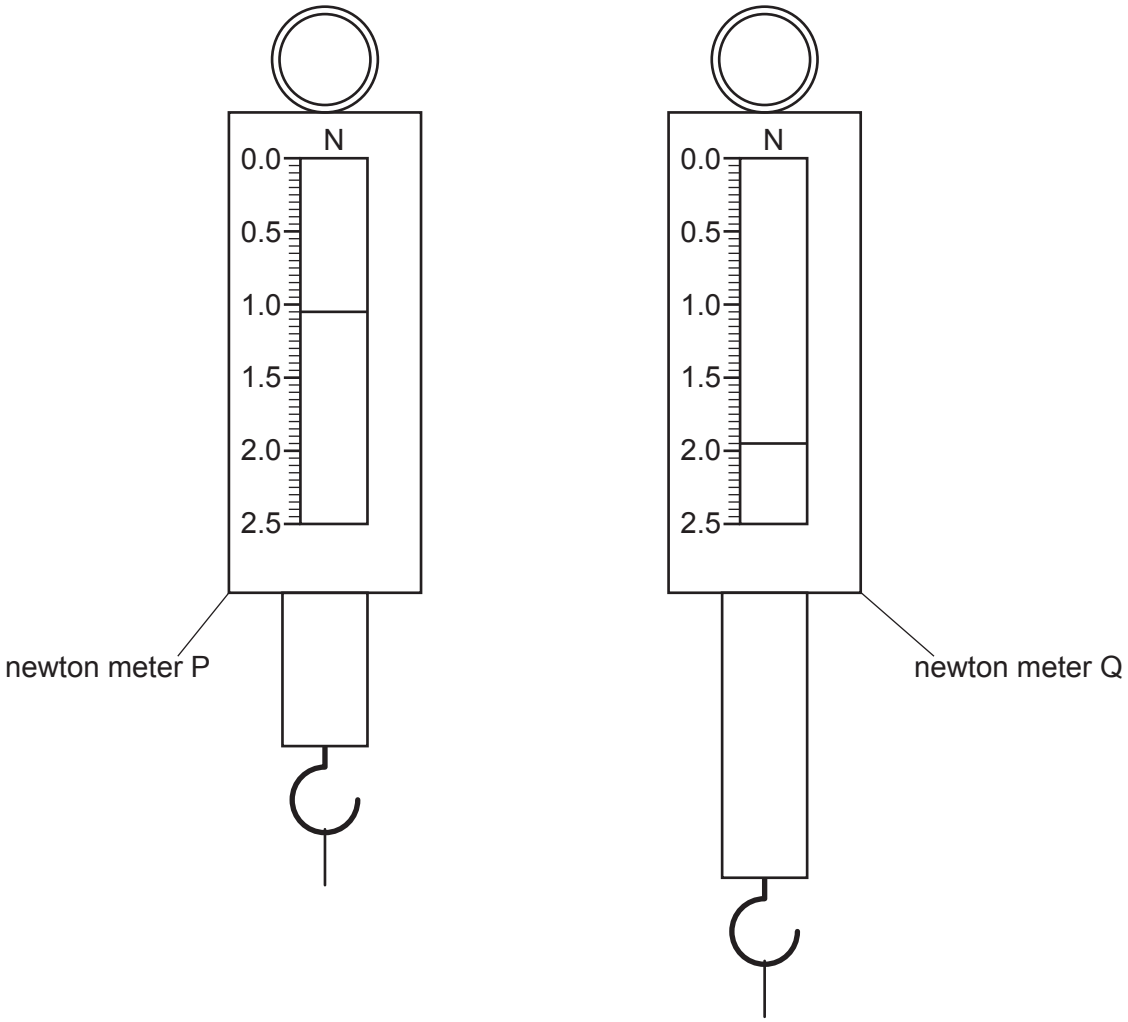

Fig. 1.3

Record F_P, the reading on newton meter P shown in Fig. 1.3.

Record F_Q, the reading on newton meter Q shown in Fig. 1.3.

F_P = ...

F_Q = ...

[1]

(c) The student moves the 1.00 N load to distances $d = 25.0$ cm, $d = 35.0$ cm, $d = 45.0$ cm, $d = 55.0$ cm and $d = 65.0$ cm.

He reads the value F_P on newton meter P and the value F_Q on newton meter Q. His readings are shown in Table 1.1.

View solution

Table 1.1

d / cm	F_P / N	F_Q / N
25.0	1.81	1.19
35.0	1.70	1.30
45.0	1.56	1.45
55.0	1.44	1.55
65.0	1.31	1.69

Using the values from Table 1.1, plot a graph of F_P / N (y-axis) against d / cm (x-axis).
On the same axes, and using the same scales, plot a graph of F_Q / N (y-axis) against d / cm (x-axis).

Draw two best-fit lines, one for each set of plots. Show clearly on your graph which line is for F_P and which line is for F_Q.

F_P / N

F_Q / N

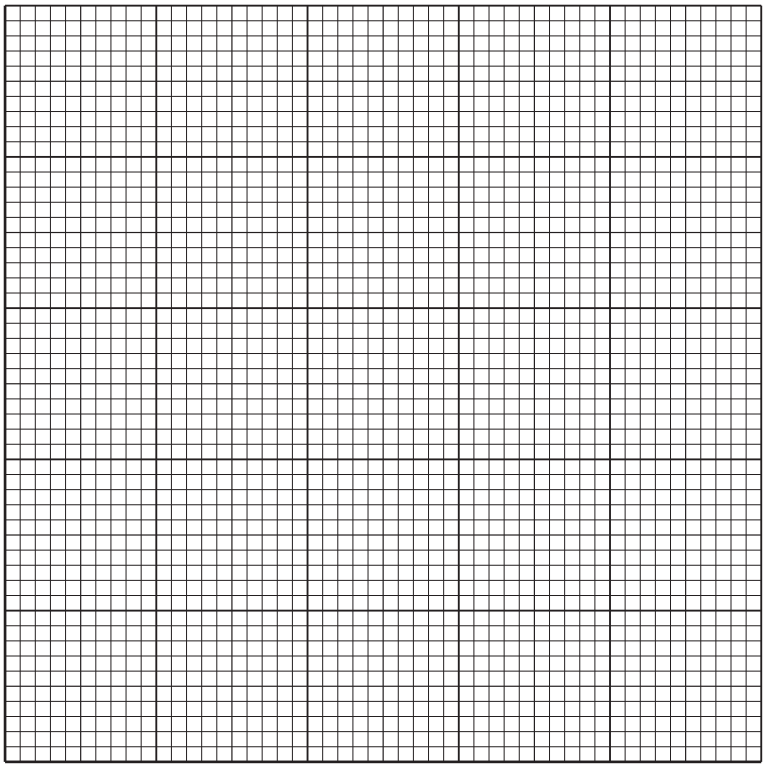

[5]

(d) From your graph, determine F_0, the value of F_P where the two best-fit lines cross.

View solution

F_0 = ...

Calculate the weight W_R of the metre rule, using the equation $W_R = (2 \times F_0) - k$, where $k = 1.00\,N$.

W_R = ...
[2]

(e) Another student does the experiment with the same equipment. He reads values of F_P which are the same as those in Table 1.1 but his values of F_Q are all 0.10 N greater than those in Table 1.1.

View solution

Suggest a reason for this difference. Assume that the values in Table 1.1 are correct.

.....

.....

..... [1]

[Total: 11]

2 A student investigates how the volume of water affects the rate at which water in a beaker cools.

She uses the apparatus shown in Fig. 2.1.

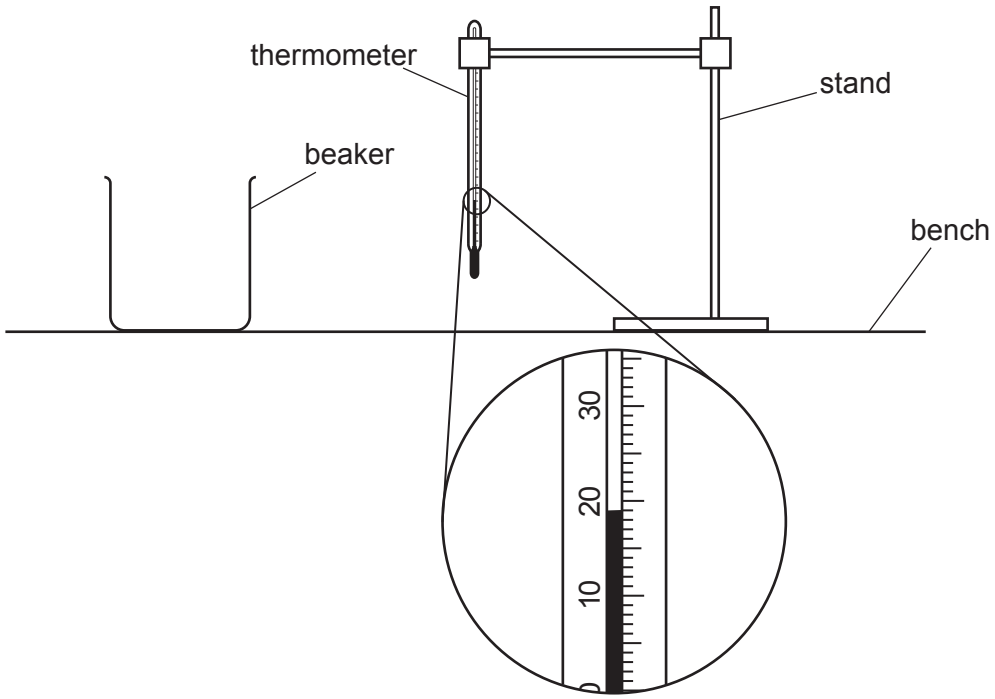

Fig. 2.1

(a) (i) Record the room temperature θ_R shown on the thermometer in Fig. 2.1.

View solution

θ_R = ... [1]

(ii) Describe **one** precaution that can be taken to ensure that temperature readings in the experiment are as accurate as possible.

.....

..... [1]

(b) The student pours a volume of 150 cm^3 of hot water into the beaker and records the temperature θ at time $t = 0$.
She records the temperature of the water in the beaker every 30 s.

She tips the water out and pours a volume of 50 cm^3 of hot water into the beaker. The student repeats the temperature measurements for this volume of water.

View solution

Her readings are shown in Table 2.1.

Complete the headings in Table 2.1.

Table 2.1

	beaker with 150 cm^3 of hot water	beaker with 50 cm^3 of hot water
t/	θ/	θ/
0	88.0	86.0
30	86.0	82.0
60	84.0	79.0
90	82.5	76.5
120	81.0	74.5
150	79.5	73.0
180	78.5	72.0

[1]

(c) Write a conclusion stating how the volume of water affects the rate of cooling of the water. Justify your answer by reference to the results.

View solution

.....

.....

.....

..... [2]

(d) **(i)** Using the results for 50 cm^3 of water, calculate the average cooling rate *x* for the first 90 s of the experiment. Use the readings from Table 2.1 and the equation

View solution

$$x = \frac{\theta_0 - \theta_{90}}{T}$$

where $T = 90$ s and θ_0 and θ_{90} are the temperatures at $t = 0$ and $t = 90$ s.
Include the unit for the cooling rate.

x = ... [2]

(ii) Another student does this experiment with the same starting temperature but in a room with a much higher room temperature than θ_R from **(a)(i)**.

View solution

State how this affects his value of x in **d(i)**.
Explain your answer by reference to the results in Table 2.1 for the beaker with 50 cm^3 of hot water.

statement .....

explanation .....

.....

.....

[2]

(e) Some thermal energy is lost from the sides of the beaker.
The student wishes to find out how much this loss of thermal energy affects the cooling rate of 50 cm^3 of water.

Briefly describe an additional experiment that the student can carry out to investigate this.
Explain how the results can be used to determine how much this loss affects the cooling rate.

additional experiment .....

.....

use of results .....

.....

[2]

[Total: 11]

View solution

3 Some students determine the focal length of a converging lens by different methods.

Method 1

One student uses the apparatus shown in Fig. 3.1.

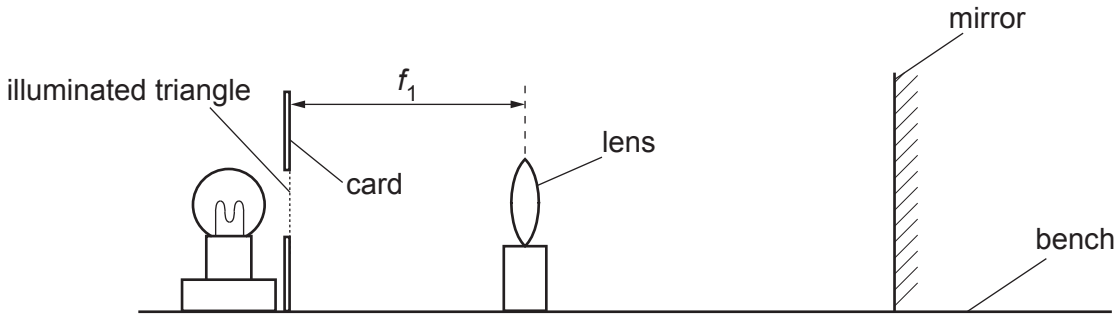

Fig. 3.1

(a) The student sets the distance between the illuminated triangle and the mirror to 40 cm. He moves the lens until he sees a sharp image of the triangle on the card, by the side of the illuminated triangle.

View solution

(i) On Fig. 3.1, measure the distance f_1 between the illuminated triangle and the lens.

f_1 = ...

Fig. 3.1 is drawn to 1/5th scale.

Calculate the actual distance F_1 between the illuminated triangle and the lens in this experiment. This is a value for the focal length of the lens.

F_1 = ...
[2]

(ii) Briefly describe a technique to obtain an image on the card that is as sharp as possible in this experiment.

.....

.....

..... [1]

View solution

Method 2

Another student sets up apparatus as shown in Fig. 3.2.

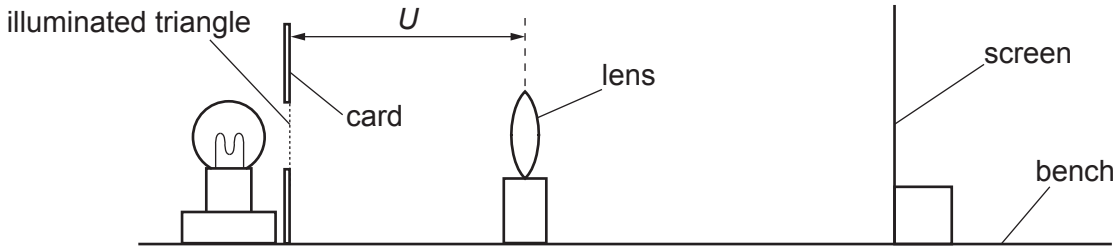

Fig. 3.2

(b) The student sets the distance between the illuminated triangle and the lens to U = 20.0 cm.

She moves the screen until a sharp image of the triangle appears on the screen.

View solution

(i) Measure h_O, the height of the illuminated triangle as shown in Fig. 3.3.

h_O = ...

Measure h_I, the height of the image on the screen as shown in Fig. 3.4.

h_I = ...
[1]



Fig. 3.3

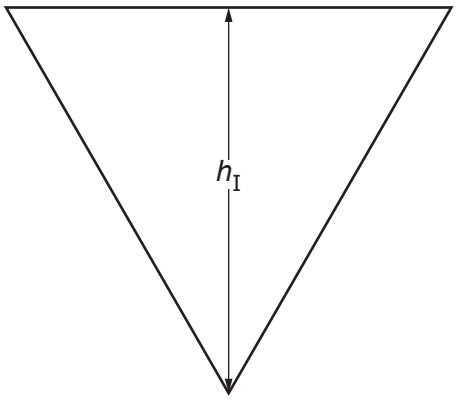

Fig. 3.4

(ii) Describe **one** difficulty when measuring the height of the image in this type of experiment. Suggest an improvement to overcome this difficulty.

difficulty .....

.....

improvement .....

.....
[2]

View solution

(iii) Calculate a value W using the equation $W = \frac{h_O}{h_I}$.

View solution

W = ...

Calculate a second value F_2 for the focal length of the lens, using the equation $F_2 = \frac{U}{(W + 1)}$.

F_2 = ...

[2]

(c) A student suggests that F_1 and F_2 should be equal.

View solution

State whether the results support this suggestion.
Justify your statement with reference to the results.

statement .....

justification .....

.....

[2]

(d) Describe **one** precaution that can be taken to obtain reliable measurements of F_1 and U in the experiment.

.....

..... [1]

[Total: 11]

View solution

4 A student investigates the resistance of a light-dependent resistor (LDR).
The resistance of an LDR changes as the intensity of light falling on it varies.

View solution

The resistance R of the LDR is calculated using the equation $R = \frac{V}{I}$

where V is the potential difference (p.d.) across the LDR and I is the current in the LDR.

Plan an experiment to investigate how the light intensity affects the resistance of an LDR.

The apparatus available includes:
an LDR
equipment to connect the circuit, part of which is shown in Fig. 4.1
a lamp with a power supply.

In your plan, you should:

- complete the circuit diagram in Fig. 4.1 to show a voltmeter connected to measure the potential difference across the LDR
- state how the light intensity falling on the LDR will be varied and list any additional apparatus needed
- explain briefly how to do the experiment, including any precautions taken to ensure reliable results
- state **one** key variable to be kept constant
- draw a table, or tables, with column headings, to show how to display the readings (you are **not** required to enter any readings in the table)
- explain how to use the readings to reach a conclusion.

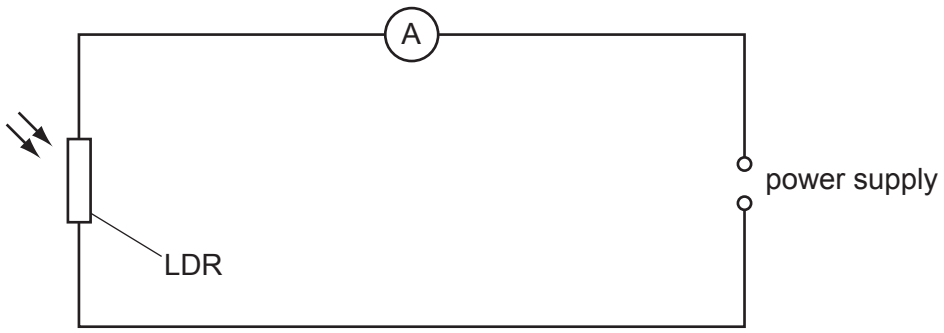

Fig. 4.1

.....

.....

.....

.....

.....

.....

.....

.....

.....

.....

.....

.....

.....

.....

.....

.....

.....

.....

.....

.....

..... [7]

BLANK PAGE

BLANK PAGE

BLANK PAGE

Permission to reproduce items where third-party owned material protected by copyright is included has been sought and cleared where possible. Every reasonable effort has been made by the publisher (UCLES) to trace copyright holders, but if any items requiring clearance have unwittingly been included, the publisher will be pleased to make amends at the earliest possible opportunity.

To avoid the issue of disclosure of answer-related information to candidates, all copyright acknowledgements are reproduced online in the Cambridge Assessment International Education Copyright Acknowledgements Booklet. This is produced for each series of examinations and is freely available to download at www.cambridgeinternational.org after the live examination series.

Cambridge Assessment International Education is part of Cambridge Assessment. Cambridge Assessment is the brand name of the University of Cambridge Local Examinations Syndicate (UCLES), which is a department of the University of Cambridge.

© UCLES 2022