Cambridge Assessment International Education

Cambridge IGCSE™

PHYSICS **0625/11**

Paper 1 Multiple Choice (Core) **May/June 2023**

45 minutes

You must answer on the multiple choice answer sheet.

You will need: Multiple choice answer sheet
Soft clean eraser
Soft pencil (type B or HB is recommended)

INSTRUCTIONS

- There are **forty** questions on this paper. Answer **all** questions.
- For each question there are four possible answers **A**, **B**, **C** and **D**. Choose the **one** you consider correct and record your choice in soft pencil on the multiple choice answer sheet.
- Follow the instructions on the multiple choice answer sheet.
- Write in soft pencil.
- Write your name, centre number and candidate number on the multiple choice answer sheet in the spaces provided unless this has been done for you.
- Do **not** use correction fluid.
- Do **not** write on any bar codes.
- You may use a calculator.
- Take the weight of 1.0 kg to be 9.8 N (acceleration of free fall = 9.8 m / s^2).

INFORMATION

- The total mark for this paper is 40.
- Each correct answer will score one mark.
- Any rough working should be done on this question paper.

This document has **16** pages.

© UCLES 2023

1 Which unit is a unit of weight?

View solution

A kilogram

B kilojoule

C kilometre

D kilonewton

2 The graph represents the motion of a vehicle.

View solution

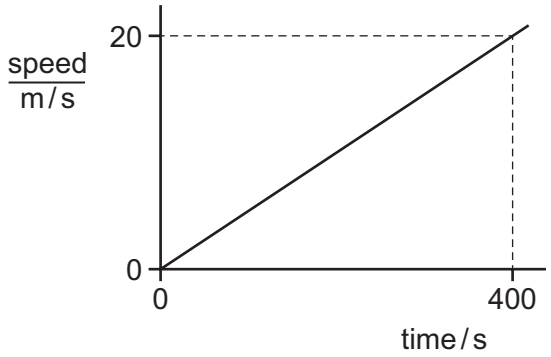

What is the distance travelled by the vehicle in 400 s?

A 20 m **B** 400 m **C** 4000 m **D** 8000 m

3 The diagram shows a distance–time graph for an object moving in a straight line.

View solution

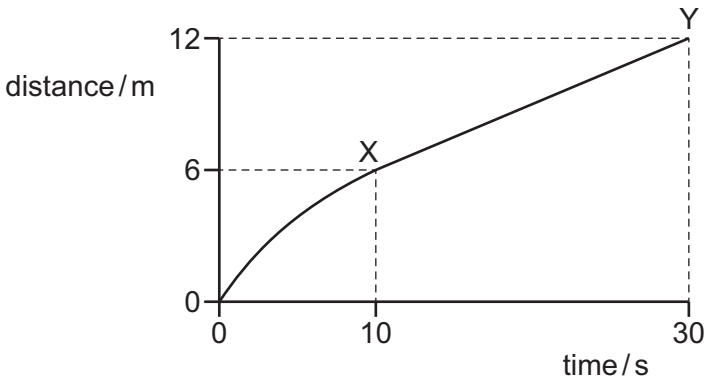

What is the average speed between X and Y?

A 0.20 m/s **B** 0.30 m/s **C** 0.40 m/s **D** 0.60 m/s

© UCLES 2023

4 A space rocket travels to the Moon.

View solution

The acceleration of free fall is greater on the Earth than it is on the Moon.

How do the mass and weight of the space rocket on the Moon compare with their values on the Earth?

	mass on the Moon	weight on the Moon
A	less than on the Earth	same as on the Earth
B	less than on the Earth	more than on the Earth
C	same as on the Earth	less than on the Earth
D	same as on the Earth	more than on the Earth

5 A shopkeeper pours rice into a dish that hangs from a spring balance. He records the reading.

View solution

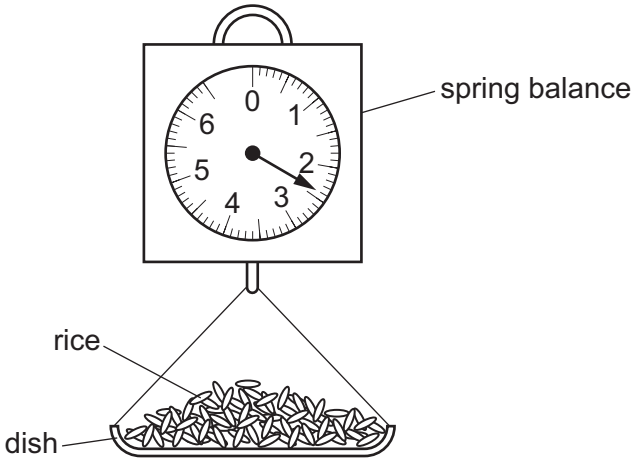

A customer buys some pasta. The shopkeeper notices that the reading on the spring balance, with just pasta in the dish, is the same as it was with just rice in the dish.

Which quantity **must** be the same for the rice and for the pasta?

A density

B temperature

C volume

D weight

© UCLES 2023

6 A student determines the density of an irregularly shaped stone. The stone is slowly lowered into a measuring cylinder partly filled with water.

View solution

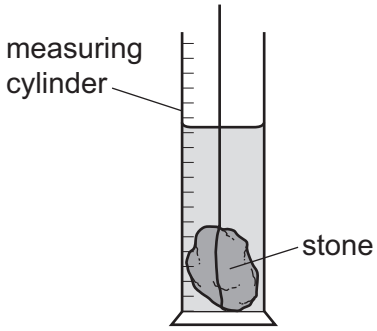

Which other apparatus does the student need to calculate the density of the irregularly shaped stone?

A a balance

B a thermometer

C a metre rule

D a stop-watch

View solution

7 Four objects are moving.

Which object has a zero resultant force acting on it?

A the object moving at a decreasing speed

B the object moving at an increasing speed

C the object moving at a constant speed in a circle

D the object moving at a constant speed in a straight line

8 The diagram shows a uniform metre rule. The rule is pivoted at its mid-point. A weight of 4.0 N is suspended from the rule at the 5 cm mark. The rule is held by a string at the 30 cm mark. The rule is in equilibrium.

View solution

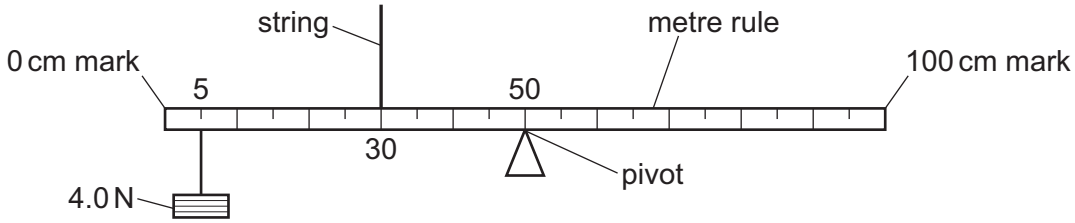

What is the upward force that the string exerts on the rule?

A 0.67 N **B** 4.0 N **C** 6.0 N **D** 9.0 N

© UCLES 2023

9 An irregularly shaped metal plate is freely suspended from a point P and is in equilibrium, as shown. Point Q is vertically below P.

View solution

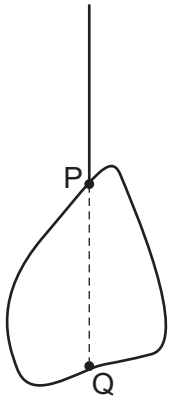

Which statement about the position of the centre of gravity of the metal plate is correct?

A It is at P.

B It is at Q.

C It is halfway between P and Q.

D Further investigation is needed to determine its position.

10 Which row about the change of energy in the energy store must be correct?

View solution

	process	energy store	change of energy in store
A	water pumped up to a high-altitude dam	gravitational potential energy of water	increases
B	water pumped up to a high-altitude dam	kinetic energy of water	decreases
C	air passes through a wind turbine	gravitational potential energy of air	increases
D	air passes through a wind turbine	kinetic energy of air	increases

11 A rock of weight 50 N falls a vertical distance of 7.0 m from rest.

View solution

What is the change in the gravitational potential energy store of the rock?

A decrease of 7.1 J

B decrease of 350 J

C increase of 7.1 J

D increase of 350 J

© UCLES 2023

12 A child runs up a set of stairs four times. The time taken for each run is recorded.

View solution

Which time is measured when the child's useful power is greatest?

A 10 s **B** 20 s **C** 30 s **D** 40 s

13 A woman has a weight of 600 N. She stands on a horizontal floor. The area of her feet in contact with the floor is 0.050 m^2.

View solution

What is the pressure she exerts on the floor?

A $1.2 \times 10^3 N/m^2$

B $2.4 \times 10^3 N/m^2$

C $1.2 \times 10^4 N/m^2$

D $2.4 \times 10^4 N/m^2$

14 Gases, liquids and solids are made up of small particles.

View solution

Which row gives the relative separation of the particles?

	gas	liquid	solid
A	far apart	far apart	far apart
B	far apart	far apart	close together
C	far apart	close together	close together
D	close together	close together	far apart

15 Which statements about evaporation of water are correct?

View solution

1 Evaporation causes the remaining liquid to cool.

2 During evaporation, the more energetic particles escape from the surface of the liquid.

3 Evaporation only happens at 100 °C.

A 1, 2 and 3 **B** 1 and 2 only **C** 1 and 3 only **D** 2 and 3 only

16 Which surface is the worst absorber of infrared radiation?

View solution

A dull black

B dull white

C shiny black

D shiny white

© UCLES 2023

17 The diagrams show graphs of displacement against time for four waves. All the graphs are drawn to the same scale.

View solution

Which wave has the largest amplitude and the highest frequency?

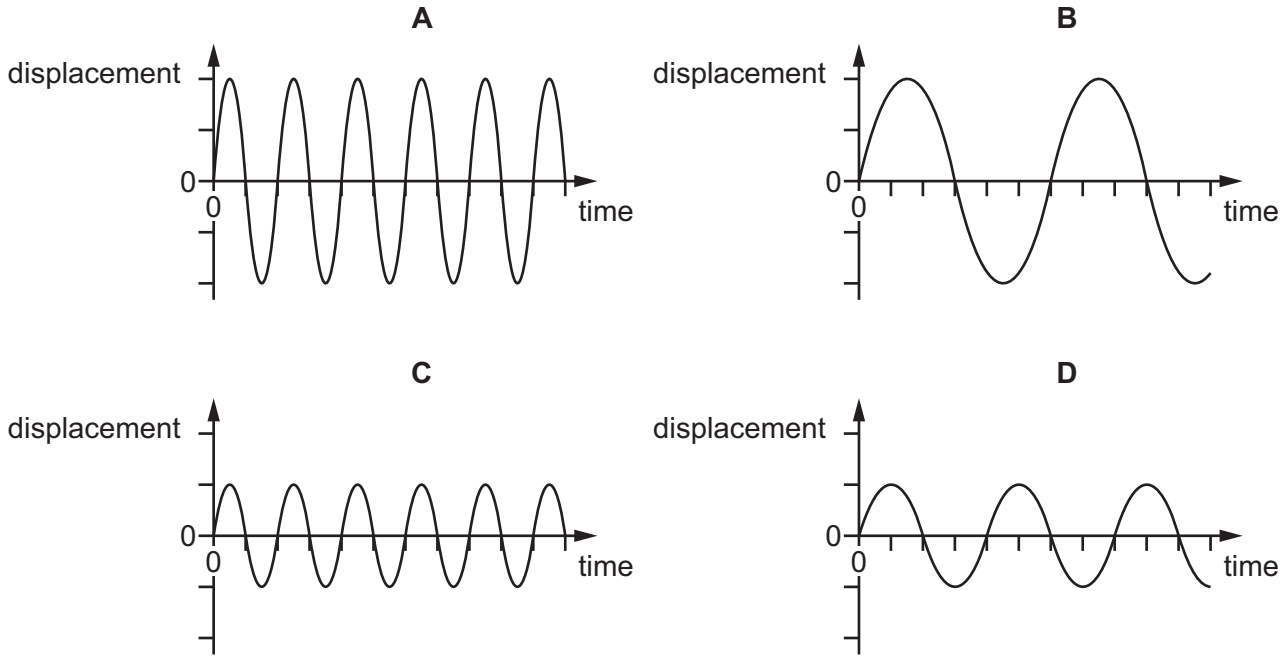

18 A student draws a diagram to show the directions of a light ray reflecting off a plane mirror.

View solution

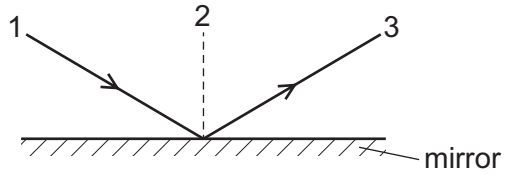

What are the correct terms for the lines drawn?

	normal	incident ray	reflected ray
A	1	2	3
B	1	3	2
C	2	1	3
D	2	3	1

© UCLES 2023

19 An object O is placed at point P near to a thin converging lens. The diagram shows three rays from the top of O passing through the lens. Each point F is one focal length from the centre of the lens. Each point 2F is two focal lengths from the centre of the lens.

View solution

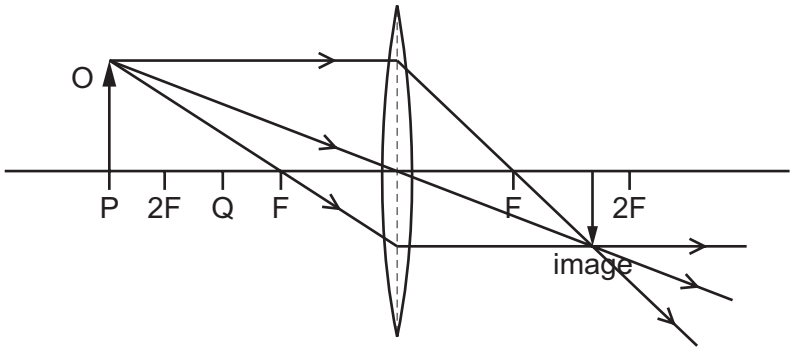

The object O is moved to point Q on the diagram.

Which type of image is produced when the object O is at point Q?

A inverted and the same size as the object

B inverted and enlarged

C upright and the same size as the object

D upright and enlarged

20 Which diagram shows the dispersion of white light by a glass prism?

View solution

A

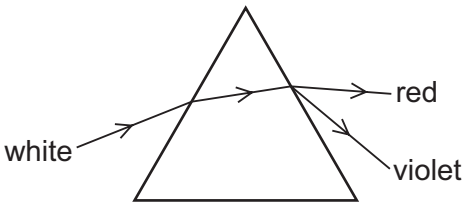

B

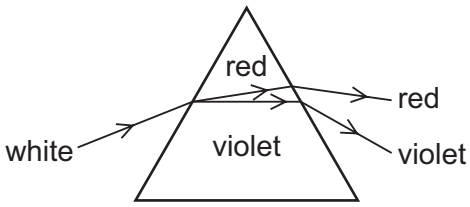

C

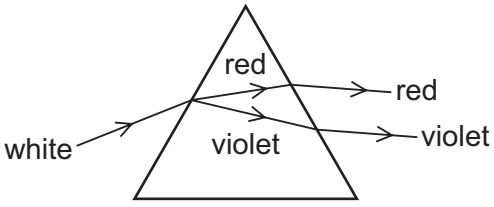

D

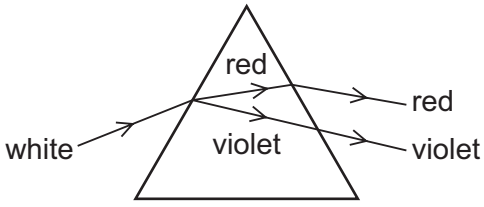

21 Which statement is correct?

View solution

A A remote controller emits microwave radiation.

B A remote controller emits infrared radiation.

C A remote controller emits ultrasound.

D A remote controller emits ultraviolet radiation.

22 Student X fires a starting pistol which produces smoke and sound. Student Y is standing 100 m away and sees the smoke the instant it is produced. The speed of sound in air is 340 m / s.

View solution

What is the time delay between student Y seeing the smoke and hearing the sound?

A 0.29 s **B** 0.59 s **C** 1.7 s **D** 3.4 s

23 An unmagnetised piece of soft iron is placed close to a strong permanent magnet, as shown.

View solution

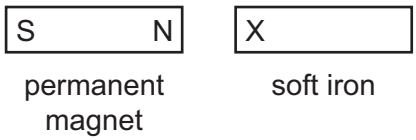

What is the induced polarity of end X of the soft iron and in which direction does the magnetic force act on the soft iron?

	polarity of end X	direction of force on the soft iron
A	N	to the left
B	N	to the right
C	S	to the left
D	S	to the right

© UCLES 2023

24 A plastic rod is rubbed with a cloth.

View solution

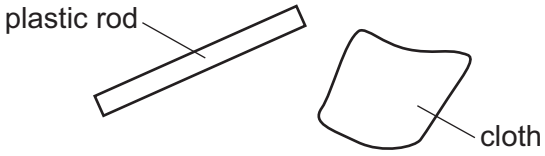

The rod and the cloth both become charged as electrons move between them.

The rod becomes negatively charged.

Which diagram shows how the rod becomes negatively charged and shows the final charge on the cloth?

A

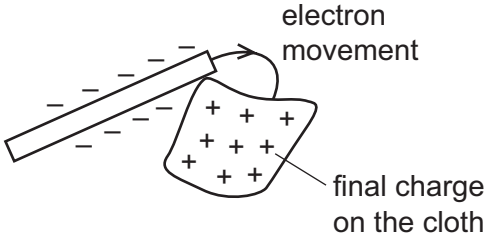

B

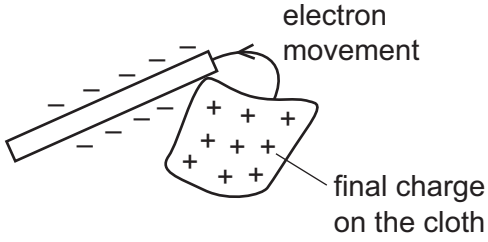

C

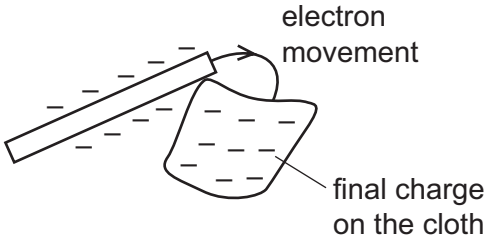

D

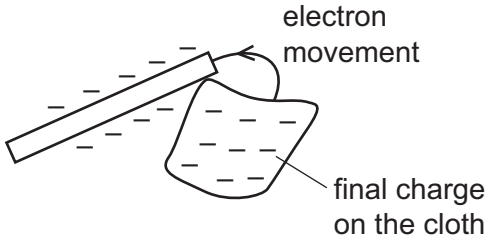

25 Which particles move to cause a current in a copper wire?

View solution

A copper atoms

B electrons from the copper atoms

C protons from the copper nuclei

D neutrons from the copper nuclei

© UCLES 2023

26 Four students draw a circuit diagram of the apparatus used to measure the resistance of resistor R.

View solution

Which circuit is correct?

A

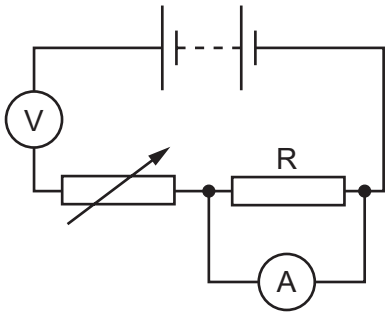

B

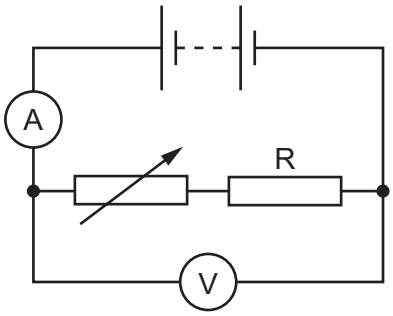

C

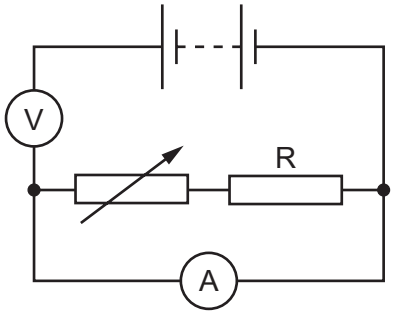

D

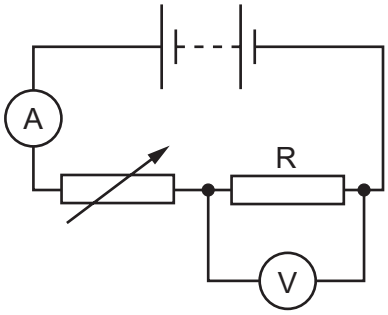

© UCLES 2023

27 The battery on a bicycle is connected in parallel to its lamp and bell.

View solution

The circuit includes two switches, S_1 and S_2.

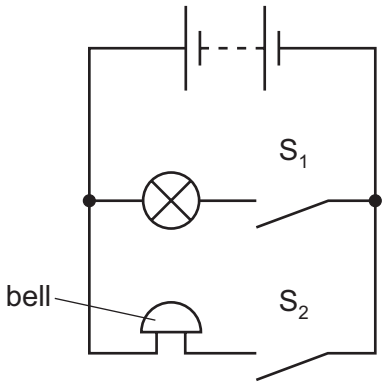

The cyclist closes S_1 to light the lamp.

She then also closes S_2 to sound the bell.

What happens to the current in the battery and the power output from the battery when the cyclist closes S_2?

	current in the battery	power output from the battery
A	increases	increases
B	increases	stays the same
C	stays the same	increases
D	stays the same	stays the same

28 Which symbol represents an electric heater?

View solution

A **B** **C** **D**



29 A student connects the circuit shown.

View solution

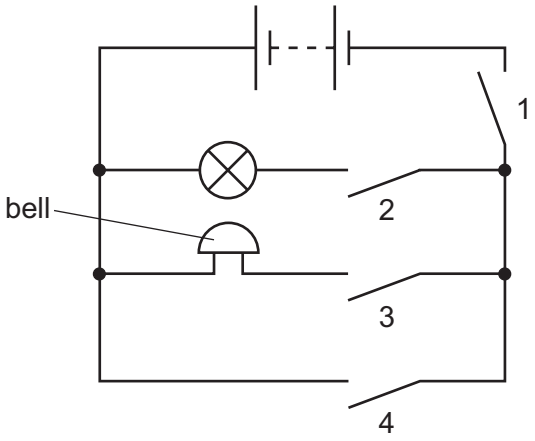

Which switches must be closed for the bell to ring without lighting the lamp?

A 1 and 2 only **B** 1 and 3 only **C** 1, 3 and 4 **D** 2, 3 and 4

30 A double-insulated electrical appliance must be connected safely to the electricity supply.

View solution

Which statement is correct?

A It must be connected with a fuse and an earth wire.

B It can be connected with a fuse only.

C It can be connected with an earth wire only.

D It does not need a fuse or an earth wire.

31 A simple electric generator induces an electromotive force (e.m.f.).

View solution

Which modification would increase the induced e.m.f.?

A Increase the number of turns in the coil of the generator.

B Increase the distance between the magnetic poles.

C Reduce the strength of the magnetic field around the coil.

D Reverse the direction of the magnetic field.

© UCLES 2023

32 The diagram shows a vertical wire carrying a current I placed between the poles of a magnet.

View solution

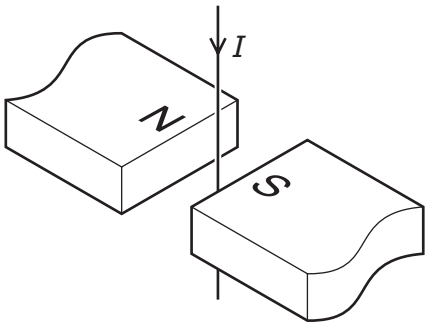

What is the direction of the force on the wire exerted by the magnetic field?

A from N to S

B from S to N

C horizontal and at right angles to the direction from N to S

D parallel to the wire

33 What is an advantage of transmitting electricity at a high voltage?

View solution

A It is faster.

B It is safer.

C Less energy is wasted.

D Less equipment is needed.

34 How are positive and negative ions formed from atoms?

View solution

	positive ion	negative ion
A	add positive charge to the nucleus	add an electron to the atom
B	add positive charge to the nucleus	remove positive charge from the nucleus
C	remove an electron from the atom	add an electron to the atom
D	remove an electron from the atom	remove positive charge from the nucleus

35 A nucleus of element X is represented as $^{56}_{26}\mathrm{X}$.

View solution

Which is an isotope of element X?

A $^{26}_{56}\mathrm{X}$ **B** $^{54}_{26}\mathrm{X}$ **C** $^{56}_{24}\mathrm{X}$ **D** $^{54}_{28}\mathrm{X}$

© UCLES 2023

36 Which statement about the random decay of the nuclei in a sample of uranium-238 is correct?

A The probabilities of an alpha-particle, a beta-particle or a gamma ray being emitted from a nucleus in the sample are equal.

B The probability of a nucleus in the sample decaying decreases as time passes.

C The probability of a nucleus decaying in any ten minute interval is the same for all the nuclei in the sample.

D The probability of a nucleus in the sample decaying increases as time passes.

View solution

37 The count rate due to a sample of a radioactive isotope is measured for 80 minutes.

View solution

time / minutes	count rate / counts / second
0	480
20	380
40	300
60	240
80	190

What is the half-life of the isotope?

A 20 minutes **B** 40 minutes **C** 60 minutes **D** 80 minutes

38 Which planet in our Solar System is nearest to the Sun and what is the nature of the planet?

View solution

	planet	nature
A	Mercury	rocky
B	Mercury	gaseous
C	Venus	rocky
D	Venus	gaseous

39 The Sun consists mostly of two elements.

View solution

What are these two elements?

A helium and nitrogen

B hydrogen and helium

C hydrogen and oxygen

D oxygen and nitrogen

© UCLES 2023

40 Which statement about the Milky Way is correct?

View solution

A It is a galaxy.

B It is a group of galaxies.

C It is a group of stars outside our own galaxy.

D It is a group of stars which are part of our galaxy.

Permission to reproduce items where third-party owned material protected by copyright is included has been sought and cleared where possible. Every reasonable effort has been made by the publisher (UCLES) to trace copyright holders, but if any items requiring clearance have unwittingly been included, the publisher will be pleased to make amends at the earliest possible opportunity.

To avoid the issue of disclosure of answer-related information to candidates, all copyright acknowledgements are reproduced online in the Cambridge Assessment International Education Copyright Acknowledgements Booklet. This is produced for each series of examinations and is freely available to download at www.cambridgeinternational.org after the live examination series.

Cambridge Assessment International Education is part of Cambridge Assessment. Cambridge Assessment is the brand name of the University of Cambridge Local Examinations Syndicate (UCLES), which is a department of the University of Cambridge.

© UCLES 2023