Cambridge Assessment International Education

Cambridge IGCSE™

CANDIDATE NAME									
CENTRE NUMBER						CANDIDATE NUMBER				

PHYSICS **0625/31**

Paper 3 Theory (Core) **May/June 2023**

1 hour 15 minutes

You must answer on the question paper.

No additional materials are needed.

INSTRUCTIONS

- Answer **all** questions.
- Use a black or dark blue pen. You may use an HB pencil for any diagrams or graphs.
- Write your name, centre number and candidate number in the boxes at the top of the page.
- Write your answer to each question in the space provided.
- Do **not** use an erasable pen or correction fluid.
- Do **not** write on any bar codes.
- You may use a calculator.
- You should show all your working and use appropriate units.
- Take the weight of 1.0 kg to be 9.8 N (acceleration of free fall = 9.8 m / s^2).

INFORMATION

- The total mark for this paper is 80.
- The number of marks for each question or part question is shown in brackets [ ].

This document has **16** pages. Any blank pages are indicated.

© UCLES 2023

1 A cyclist is travelling along a straight road. Fig. 1.1 shows the speed–time graph for the cyclist. The graph is divided into four sections labelled P, Q, R and S.

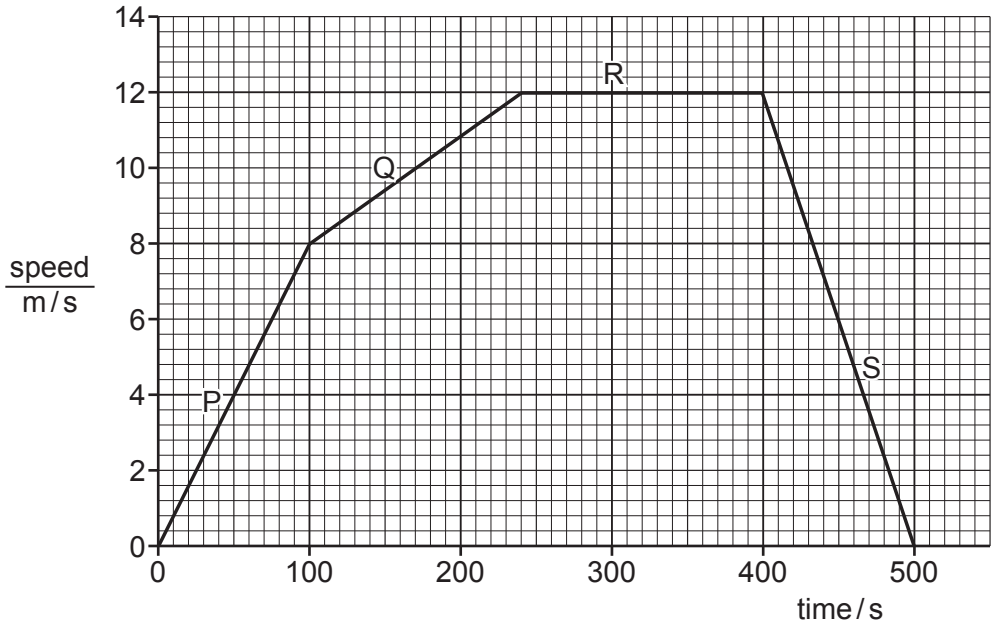

Fig. 1.1

(a) Calculate the distance travelled by the cyclist in section P from time = 0 to time = 100 s.

View solution

distance travelled = ... m [3]

(b) Describe the motion of the cyclist in each of sections Q, R and S shown in Fig. 1.1.

View solution

Q .....

R .....

S .....

[3]

(c) The cyclist is moving north along the road.

View solution

Determine the velocity of the cyclist at time = 300 s. Include the unit.

velocity of cyclist = ... [2]

[Total: 8]

© UCLES 2023

2 Fig. 2.1 shows a concrete beam resting on the ground.

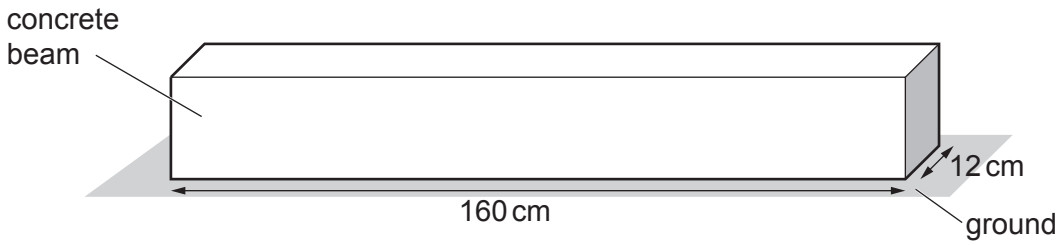

Fig. 2.1 (not to scale)

View solution

(a) The weight of the concrete beam is 1540 N.

Calculate the pressure on the ground due to the concrete beam.

pressure = ... N / cm^2 [4]

(b) A builder starts to raise one end of the beam.

He uses a force of 1030 N at a perpendicular distance of 120 cm from the pivot. Fig. 2.2 shows the arrangement.

View solution

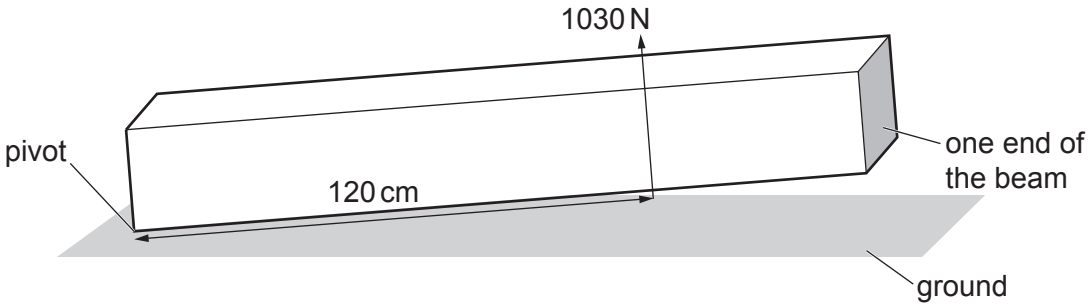

Fig. 2.2 (not to scale)

Calculate the moment of the 1030 N force about the pivot.

moment = ... N cm [3]

(c) Describe how the builder can use a smaller force to lift the beam.

View solution

..... [1]

(d) The builder positions the beam as shown in Fig. 2.3.

View solution

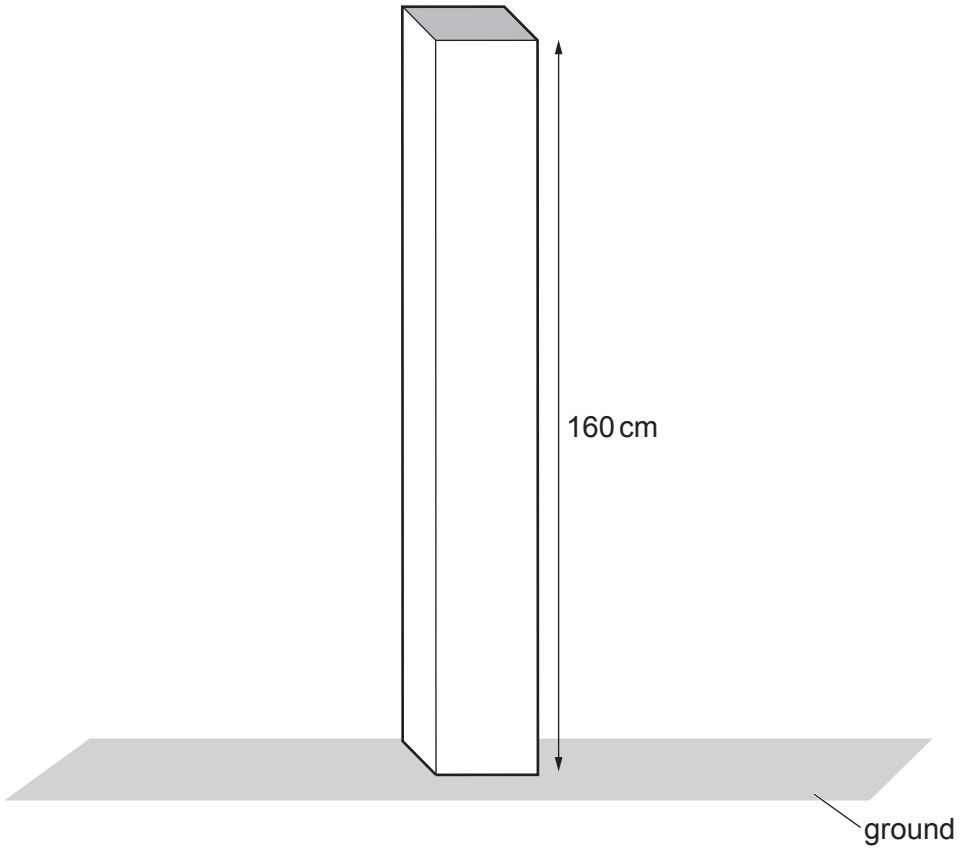

Fig. 2.3 (not to scale)

State why the beam shown in Fig. 2.3 is less stable than the beam shown in Fig. 2.1.

..... [1]

[Total: 9]

© UCLES 2023

3 Electricity is distributed from wind turbines to homes and industry.

(a) Statements A–F describe the main stages in the transfer of energy from the Sun to electrical energy in a wind turbine generator.
The statements A–F are **not** in the correct order.

View solution

A Air moves from regions of high pressure to regions of low pressure.
B The turbine blades turn a generator.
C Energy from the Sun heats the atmosphere unevenly.
D Uneven heating of the atmosphere produces regions of different atmospheric pressure.
E The generator produces electrical energy.
F Moving air turns the turbine blades.

Complete the flow chart to describe how a wind turbine uses energy from the Sun to generate electrical energy. Insert the missing letters in the empty boxes.

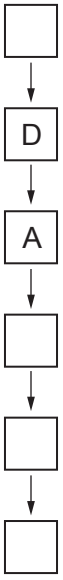

[3]

(b) State **two** disadvantages, apart from cost, of using wind turbines to produce electrical energy for homes and industry.

1 .....

2 .....

[2]

[Total: 5]

View solution

4 A student uses an electric motor to lift a load. Fig. 4.1 shows the arrangement.

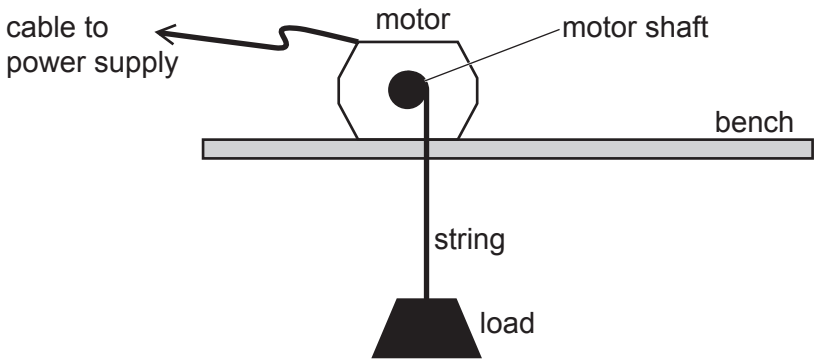

Fig. 4.1 (not to scale)

(a) (i) The motor exerts a force of 25 N on the load. It lifts the load a vertical distance of 2.0 m.

Calculate the work done by the motor on the load.

View solution

work done on the load = ... J [3]

(ii) State the useful energy output of the electric motor when it lifts the load 2.0 m. View solution

useful energy output = ... J [1]

(iii) The useful energy output of the motor is less than the energy input to the motor.

View solution

Explain why the useful energy output is less than the energy input.

.....

..... [2]

(b) The student uses the motor to lift a different load. The motor does 80 J of work when it lifts this load. It takes 5.0 s to lift the load.

Calculate the power output of the electric motor.

View solution

power output = ... W [3]

[Total: 9]

© UCLES 2023

5 Fig. 5.1 represents some particles of a gas in a metal box. The arrows represent the directions of movement of the particles.

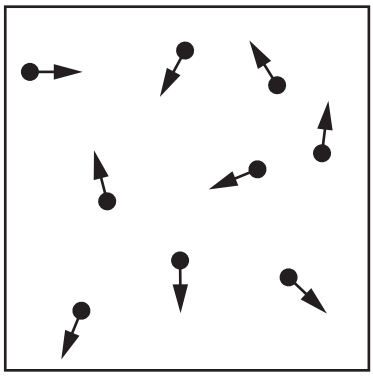

Fig. 5.1 (not to scale)

(a) Describe how the particles in Fig. 5.1 exert a pressure on the walls of the box.

View solution

.....

.....

..... [3]

(b) The number of gas particles in the box increases. The temperature of the gas does **not** change.

State and explain the effect, if any, on the pressure exerted by the gas particles on the walls of the box.

.....

.....

..... [2]

[Total: 5]

View solution

6 A student observes waves on the surface of water in a tank. The waves all have the same wavelength.

(a) The student measures the wavelength of the waves by measuring the distance between one peak and the next peak.

View solution

Describe a more accurate method for determining the wavelength.

.....

..... [2]

(b) The wavelength of the waves is 4.0 cm and their frequency is 6.0 Hz.

View solution

Calculate the wave speed.

wave speed = ... cm / s [3]

(c) Fig. 6.1 shows water waves in the tank travelling from deep water to shallow water.

View solution

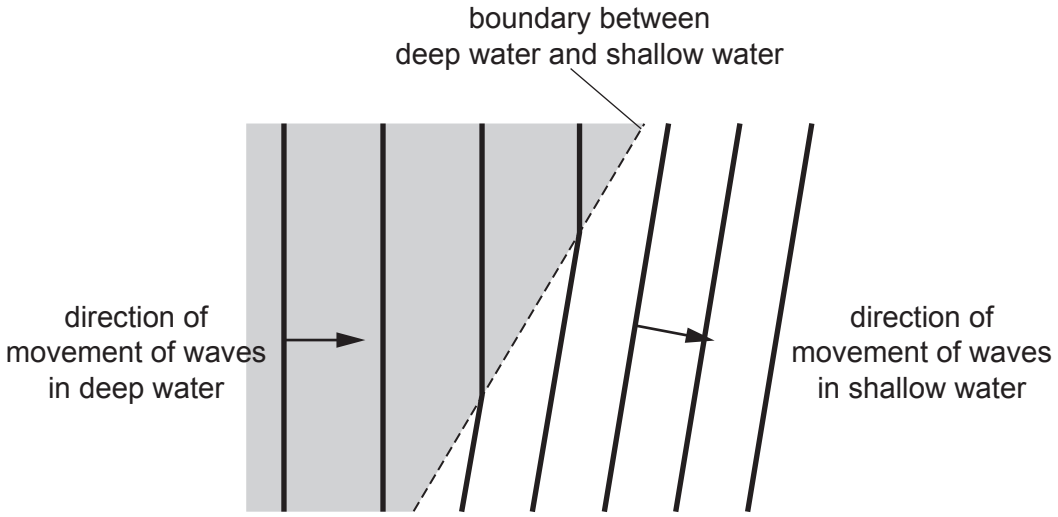

Fig. 6.1

State and explain what happens to the waves as they move from deep water to shallow water.

name of effect .....

explanation .....

.....

[2]

[Total: 7]

7 Fig. 7.1 represents two rays of light striking a thin converging lens. The rays are both parallel to the principal axis.
F_2 and F_1 are the focal points of the lens.

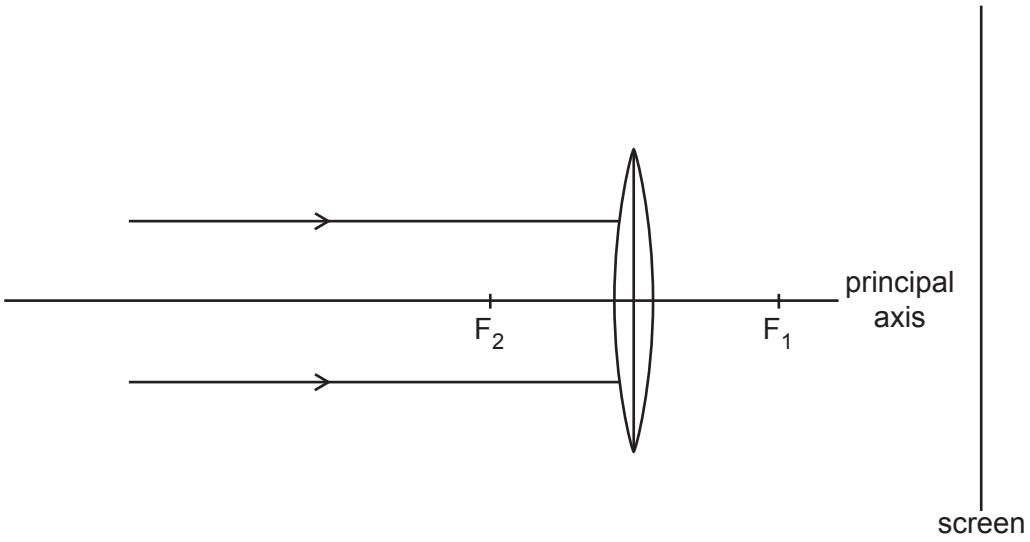

Fig. 7.1

View solution

(a) On Fig. 7.1, continue the path of each ray beyond the lens as far as the screen. [2]

View solution

(b) Visible light is a region of the electromagnetic spectrum.

State **one** region of the electromagnetic spectrum which has waves of longer wavelength than waves of visible light.

..... [1]

View solution

(c) Gamma rays are another region of the electromagnetic spectrum.

(i) Describe **one** use of gamma rays.

..... [1]

(ii) Describe **one** harmful effect on people of excessive exposure to gamma rays.

..... [1]

[Total: 5]

View solution

8 Fig. 8.1 shows the magnetic field pattern around two permanent magnets. The magnets are repelling each other.

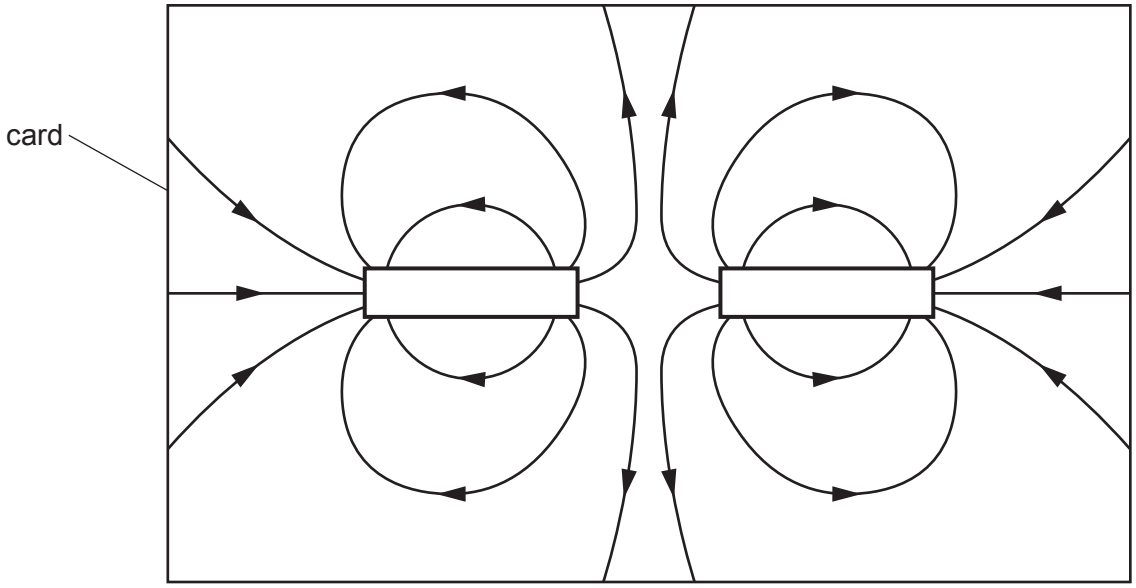

Fig. 8.1

View solution

(a) On Fig. 8.1, label both the poles on **each** magnet. [1]

(b) Describe how to plot the shape and direction of the magnetic field pattern shown in Fig. 8.1.

.....

.....

.....

.....

..... [4]

[Total: 5]

View solution

9 Fig. 9.1 shows a series circuit. Two of the components in the circuit are labelled.

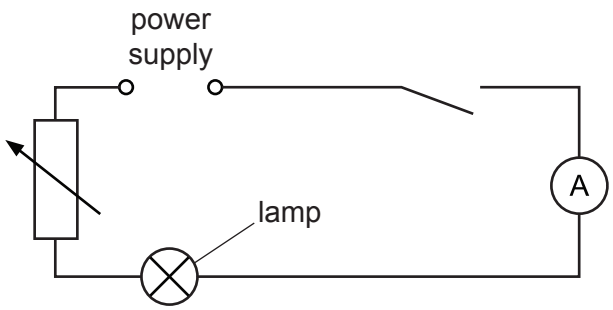

Fig. 9.1

(a) State the name of **two** other components in the circuit.

View solution

1 .....

2 .....

[2]

(b) The current in the lamp is 0.40 A. The potential difference (p.d.) across the lamp is 6.0 V.

View solution

Calculate the power dissipated in the lamp.

power = ... W [3]

(c) Draw on Fig. 9.1 to show a lamp connected in parallel with the lamp in the circuit. Use the correct symbol. [1]

[Total: 6]

View solution

10 **(a)** Fig. 10.1 shows an arrangement used to demonstrate electromagnetic induction.

View solution

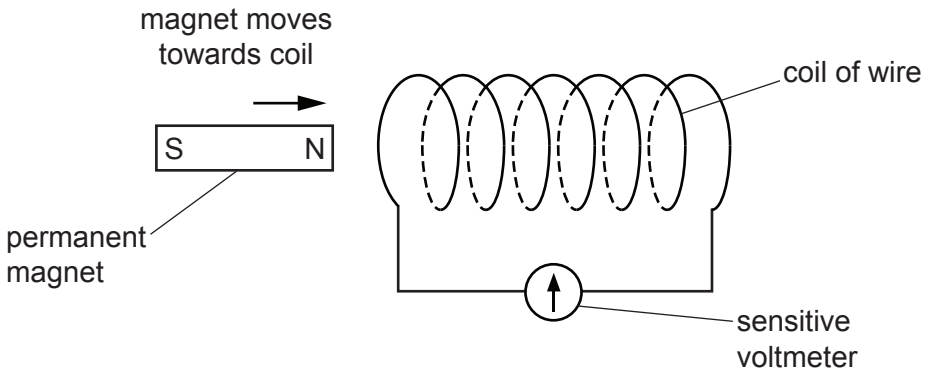

Fig. 10.1

(i) When the magnet moves towards the coil of wire, the pointer on the sensitive voltmeter deflects to the right.

Explain why the pointer deflects.

.....

..... [2]

(ii) State **two** changes that increase the deflection on the sensitive voltmeter.

View solution

1 .....

2 .....

[2]

(b) Fig. 10.2 shows the symbol for a transformer. The primary coil is connected to a voltage of 180 V a.c.

View solution

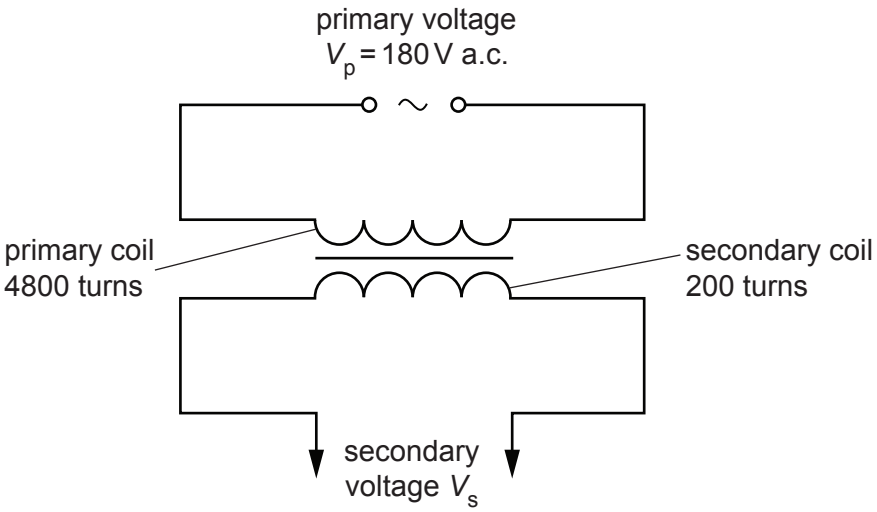

Fig. 10.2

Calculate the secondary voltage V_s for the transformer.

V_s = ... V [3]

[Total: 7]

11 Fig. 11.1 represents all the particles in an atom which is a radioactive isotope of carbon.

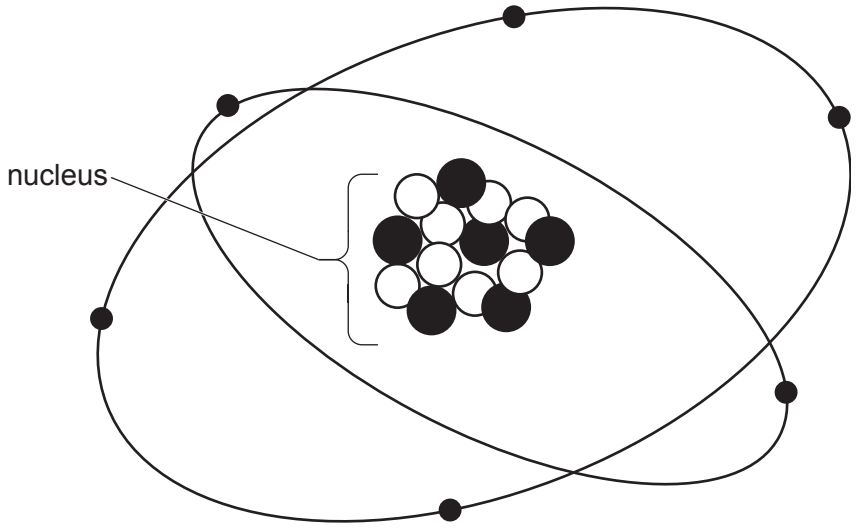

Fig. 11.1 (not to scale)

View solution

(a) Table 11.1 gives information about the particles shown in Fig. 11.1.

Using the information in Fig. 11.1, write in the empty boxes to complete Table 11.1.

Table 11.1

name of particle	number of particles	position of particle	relative charge of particle
electron			
neutron		in the nucleus	
	6		+1 (plus one)

[4]

(b) A museum displays an item made of ancient wood. When the wood was new, the item contained 8.00 mg of the isotope shown in Fig. 11.1. The item now contains 2.00 mg of the isotope. The half-life of the isotope is 5700 years.

View solution

Calculate the age of the wood in the item.

age of wood = ... years [3]

[Total: 7]

© UCLES 2023

12 **(a)** Fig. 12.1 represents the Earth and the Sun at one point in the Earth's orbit of the Sun.

View solution

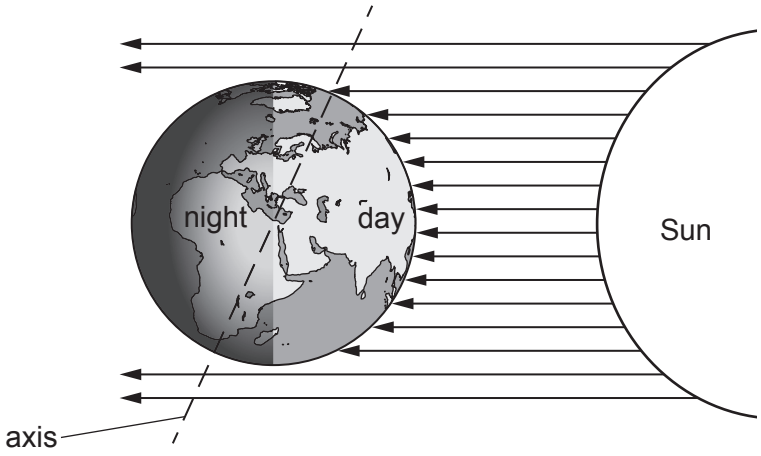

Fig. 12.1 (not to scale)

Explain the apparent daily motion of the Sun across the sky.

.....

.....

..... [2]

(b) List the four planets closest to the Sun in order of their distance from the Sun. One is done for you.

View solution

1 ..... 2 ..... 3 Earth 4 ..... [2]

(c) The Sun mostly consists of two elements.

View solution

State the **two** elements.

1 .....

2 .....

[2]

(d) The Sun is a star in a galaxy.

View solution

State the name of the galaxy.

..... [1]

[Total: 7]

BLANK PAGE

Permission to reproduce items where third-party owned material protected by copyright is included has been sought and cleared where possible. Every reasonable effort has been made by the publisher (UCLES) to trace copyright holders, but if any items requiring clearance have unwittingly been included, the publisher will be pleased to make amends at the earliest possible opportunity.

To avoid the issue of disclosure of answer-related information to candidates, all copyright acknowledgements are reproduced online in the Cambridge Assessment International Education Copyright Acknowledgements Booklet. This is produced for each series of examinations and is freely available to download at www.cambridgeinternational.org after the live examination series.

Cambridge Assessment International Education is part of Cambridge Assessment. Cambridge Assessment is the brand name of the University of Cambridge Local Examinations Syndicate (UCLES), which is a department of the University of Cambridge.

© UCLES 2023