Cambridge Assessment International Education

Cambridge IGCSE™

CANDIDATE NAME									
CENTRE NUMBER						CANDIDATE NUMBER				

PHYSICS **0625/33**

Paper 3 Theory (Core) **May/June 2023**

1 hour 15 minutes

You must answer on the question paper.

No additional materials are needed.

INSTRUCTIONS

- Answer **all** questions.
- Use a black or dark blue pen. You may use an HB pencil for any diagrams or graphs.
- Write your name, centre number and candidate number in the boxes at the top of the page.
- Write your answer to each question in the space provided.
- Do **not** use an erasable pen or correction fluid.
- Do **not** write on any bar codes.
- You may use a calculator.
- You should show all your working and use appropriate units.
- Take the weight of 1.0 kg to be 9.8 N (acceleration of free fall = 9.8 m / s^2).

INFORMATION

- The total mark for this paper is 80.
- The number of marks for each question or part question is shown in brackets [ ].

This document has **16** pages. Any blank pages are indicated.

© UCLES 2023

1 Fig. 1.1 shows the distance–time graph for an engineer's journey.
She drives from her home directly to her office and parks the car.
She then drives from her office to her friend's house and parks the car.

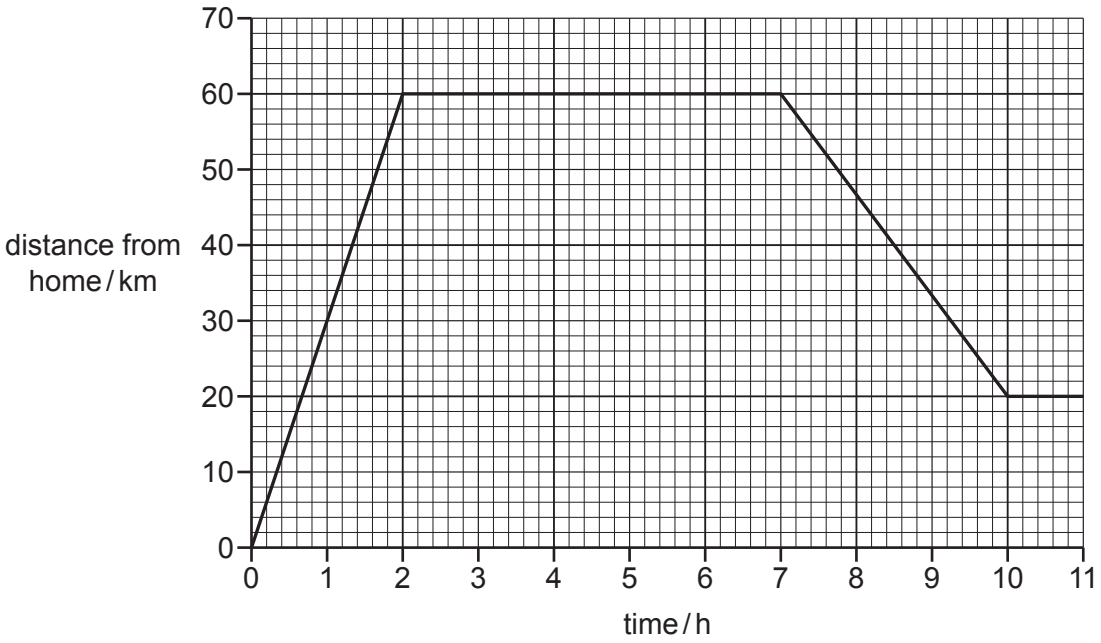

Fig. 1.1

View solution

(a) Determine the distance between:

(i) the engineer's home and her office ..... km [1]

(ii) the engineer's office and her friend's house. ..... km [1]

View solution

(b) Determine the time taken to travel between:

(i) the engineer's home and her office ..... h [1]

(ii) the engineer's office and her friend's house. ..... h [1]

View solution

(c) Calculate the speed of the car between time = 7 h and time = 10 h.

speed = ... km / h [3]

[Total: 7]

© UCLES 2023

2 Fig. 2.1 shows an engineer working with wind turbines.



Fig. 2.1

View solution

(a) Complete the sentences describing how electrical power is generated by energy in the wind.

(i) The source of the wind energy is ..... . [1]

(ii) When the blades turn, electrical power is generated in the ..... . [1]

(b) Describe **two** advantages, apart from cost, of generating electrical power by using wind turbines compared with using a coal-fired power station.

1 .....

.....

2 .....

.....

[2]

[Total: 4]

View solution

3 A student balances a beam on a pivot. They then balance block A and block B on the beam, as shown in Fig. 3.1.

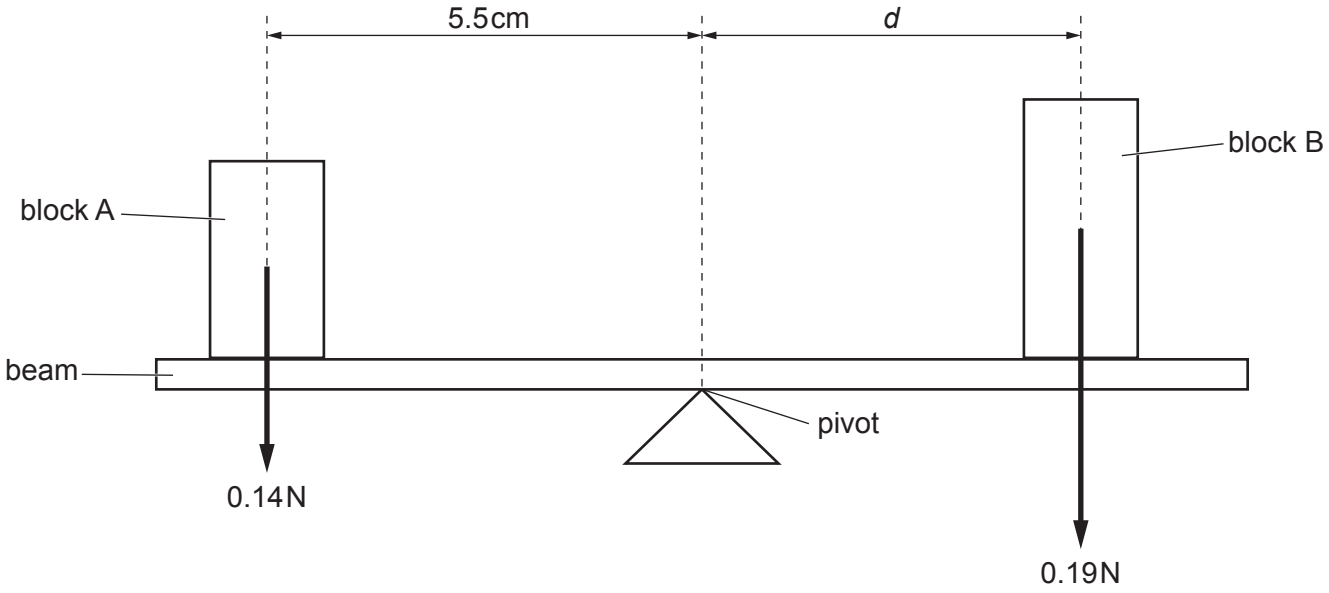

Fig. 3.1 (not to scale)

(a) (i) The weight of block A is 0.14 N.

Show that the moment of block A about the pivot is approximately 0.8 N cm.

View solution

[3]

(ii) The weight of block B is 0.19 N.

Calculate the distance *d* between the pivot and the centre of block B.

View solution

distance *d* = ... cm [3]

(b) The weight of block B is 0.19 N.

Calculate the mass of block B.

View solution

mass of block B = ... kg [3]

[Total: 9]

© UCLES 2023

4 A tight-fitting lid keeps air inside a metal can.
An airtight rubber bung holds a liquid-in-glass thermometer that is inserted through a hole in the lid, as shown in Fig. 4.1.

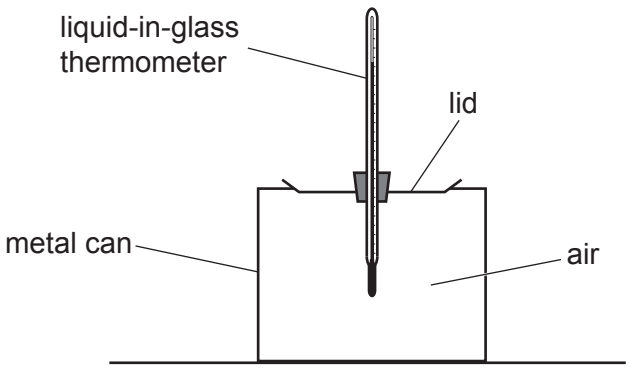

Fig. 4.1

View solution

(a) (i) State what happens to the liquid in the thermometer when the air temperature rises.

..... [1]

(ii) The temperature of the air in the can is 18 °C.

View solution

Calculate the temperature of the air in kelvin.

temperature = ... K [2]

(b) The can is placed in a refrigerator. The temperature of the air inside the can decreases.

State and explain what happens to the pressure exerted by the air in the can. Use your ideas about gas particles.

.....

.....

.....

..... [3]

(c) The air in another can exerts a pressure of 102 000 N / m^2 on the lid. The area of the can lid is 0.0082 m^2.

View solution

Calculate the force on the lid due to the air in the can.

force = ... N [3]

[Total: 9]

© UCLES 2023

5 A teacher demonstrates the behaviour of waves by using water waves in a ripple tank.

Fig. 5.1 shows a cross-section through part of the water waves.

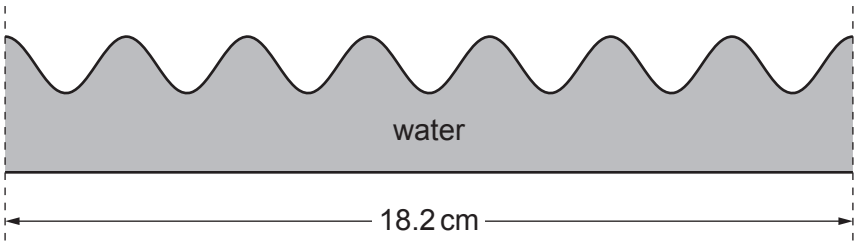

Fig. 5.1 (not to scale)

(a) Calculate the wavelength of the water waves. Use the information in Fig. 5.1.

View solution

wavelength = ... cm [2]

(b) The teacher places a pointer above the water waves as shown in Fig. 5.2.

View solution

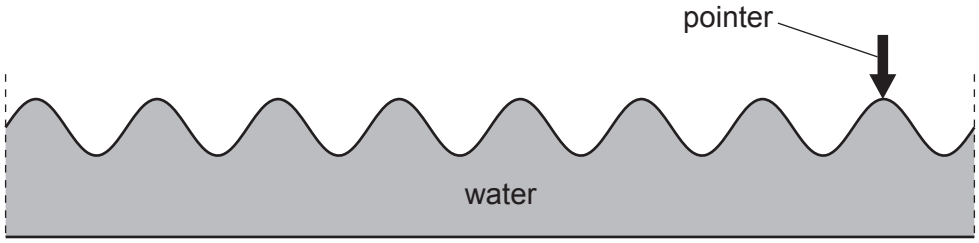

Fig. 5.2 (not to scale)

Three students use stop-watches to measure the time taken for 50 peaks to pass the pointer. Fig. 5.3 shows the measurements.



time = ... s time = ... s time = ... s

Fig. 5.3

(i) On the line below each stop-watch, state the time measurement, in seconds. [1]

(ii) Calculate the average of the three time measurements in **(b)(i)**.

View solution

average time = ... s [2]

(iii) Calculate the frequency of the water waves using your result in **(b)(ii)**.

View solution

frequency = ... Hz [2]

(c) The teacher repeats the demonstration using a different ripple tank and obtains these results for the waves.

View solution

wavelength = 0.025 m
frequency = 2.4 Hz

Calculate the speed of the wave.

speed of wave = ... m/s [3]

[Total: 10]

6 Table 6.1 shows regions of the electromagnetic (e.m.) spectrum.

Two of the regions are not labelled.

View solution

Table 6.1

gamma rays	X-rays	.....	visible light	infrared	.....	radio waves

(a) (i) Complete Table 6.1 by writing the name of each region that is not labelled. [2]

(ii) State **two** properties that are the same for waves in all regions of the e.m. spectrum.

View solution

1 .....

.....

2 .....

.....

[2]

(b) X-rays are used in hospitals to check for broken bones.

View solution

(i) State **one** other use for X-rays.

..... [1]

(ii) State **one** precaution taken by people who work with X-rays.

..... [1]

[Total: 6]

View solution

7 **(a)** Students are investigating the refraction of light as it travels from air into glass.

Their task is to measure the angle of incidence and the angle of refraction at the surface of the glass block.

View solution

The students have the equipment shown in Fig. 7.1.

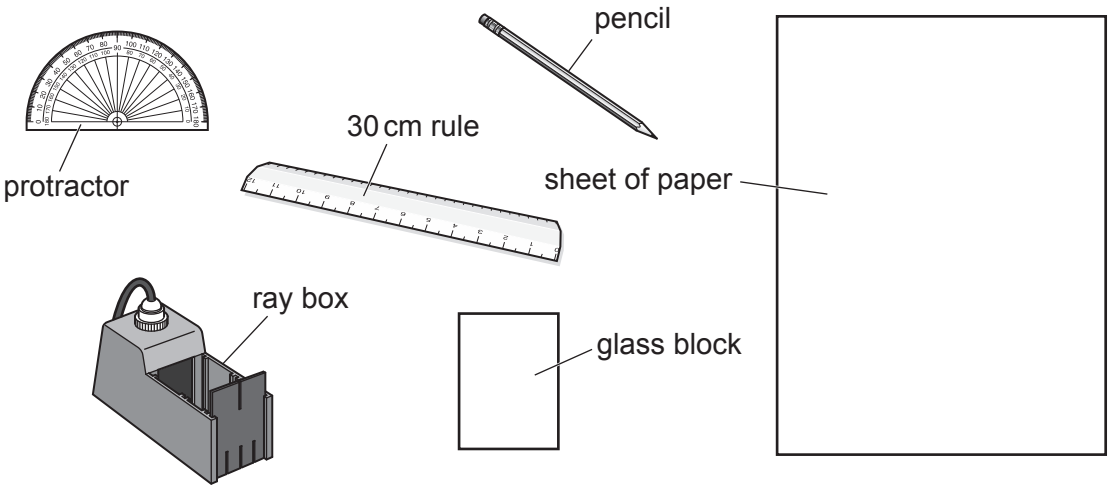

Fig. 7.1

Describe the method for the task.
You may draw a diagram as part of your answer.

.....

.....

.....

..... [4]

(b) Fig. 7.2 and Fig. 7.3 show two identical lenses, each forming an image. The images I_1 and I_2 have different characteristics.

View solution

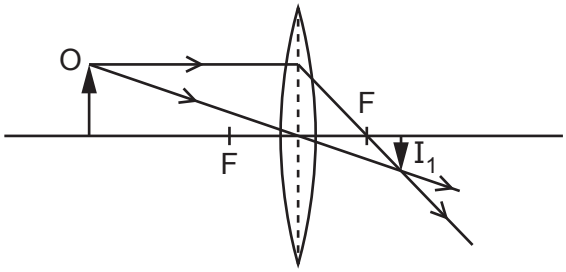

Fig. 7.2

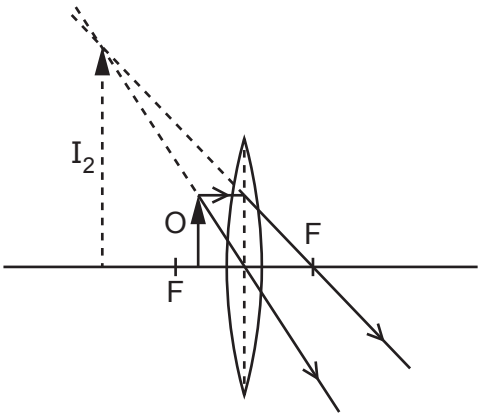

Fig. 7.3

One difference in the characteristics of the two images is:

Image I_1 is ..... diminished ..... but image I_2 is ..... enlarged ..... .

State **two** more differences in the characteristics of the images:

Image I_1 is ..... but image I_2 is ..... .

Image I_1 is ..... but image I_2 is ..... .

[3]

[Total: 7]

© UCLES 2023

8 **(a)** Fig. 8.1 shows the electrical symbols for some circuit components.

Draw a line from each electrical symbol to the name of the circuit component it represents.

View solution

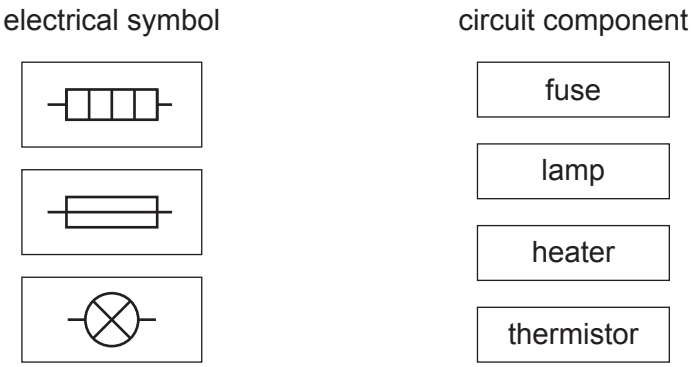

Fig. 8.1

[3]

(b) Fig. 8.2 shows a circuit including a battery, a fixed resistor R and an ammeter.

View solution

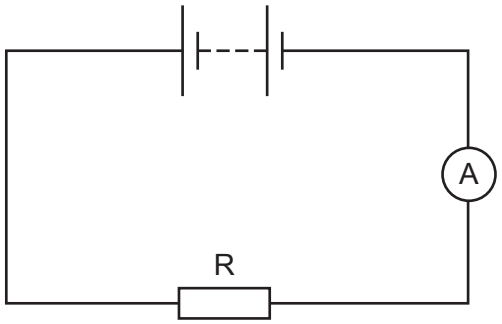

Fig. 8.2

The reading on the ammeter is 0.38 A.
The potential difference across the fixed resistor R is 12 V.

(i) Calculate the resistance of the fixed resistor R.

resistance = ... Ω [3]

(ii) Calculate the electrical power transferred in the fixed resistor R. Include the unit.

View solution

power transferred = ... unit ..... [4]

[Total: 10]

© UCLES 2023

9 Fig. 9.1 represents an atom of beryllium. The labels A, B and C indicate three types of particle.

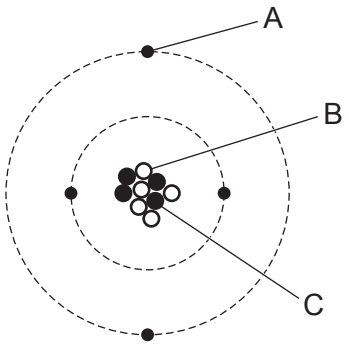

Fig. 9.1

View solution

(a) (i) Complete Table 9.1.

Name each type of particle and state the sign of its charge.

One row is done for you.

Table 9.1

type of particle	name	sign of charge
A		
B		
C	proton	positive (+)

[3]

View solution

(ii) There are several different isotopes of beryllium.

State what is meant by the term isotope.

.....

..... [2]

© UCLES 2023

(b) Fig. 9.2 shows sources of background radiation that affect people.

View solution

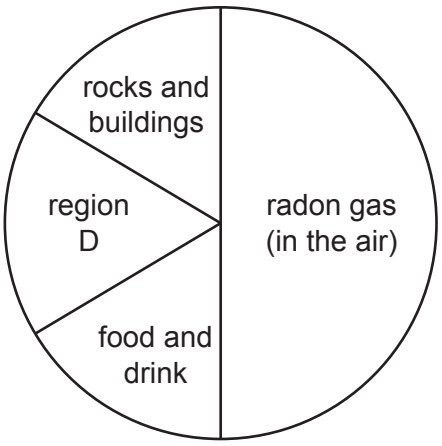

Fig. 9.2

Suggest the source of background radiation in region D.

..... [1]

(c) The nuclide notation for an atom of radon is:

View solution

$$^{222}_{86}Rn$$

(i) State the number of protons in this atom of radon. ..... [1]

(ii) State the number of particles in the nucleus of this atom of radon. ..... [1]

[Total: 8]

View solution

10 Fig. 10.1 represents part of the Solar System.

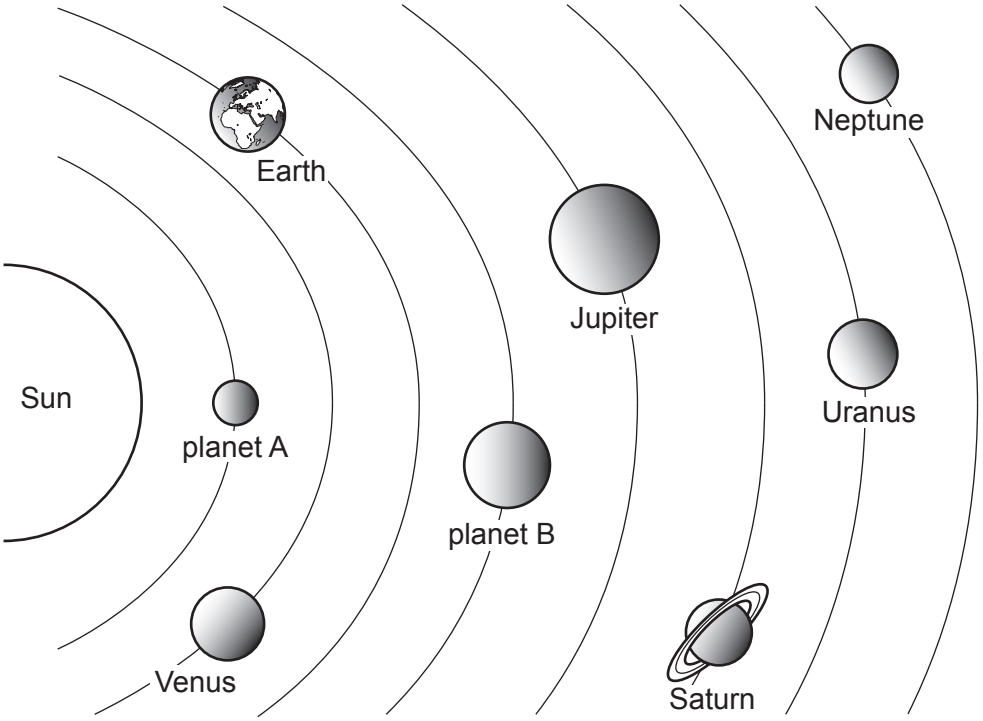

Fig. 10.1 (not to scale)

(a) (i) State the name of planet A and the name of planet B.

View solution

planet A .....

planet B .....

[2]

(ii) On Fig. 10.1, draw an X to represent a moon of Jupiter. Draw a line to show how this moon moves. [1]

(iii) State **two** ways in which the four planets nearest to the Sun are different from the four planets furthest away from the Sun.

1 .....

2 .....

[2]

(iv) Complete the following sentences:

The galaxy that includes the Solar System is called the ..... .

The ..... includes billions of galaxies.

[2]

© UCLES 2023

(b) The distance between the Sun and the Earth is 1.5×10^{11} m.
The speed of an electromagnetic wave is 3.0×10^{8} m/s.

View solution

Calculate the time taken for an electromagnetic wave to travel from the Sun to the Earth.

time taken = ... s [3]

[Total: 10]

BLANK PAGE

Permission to reproduce items where third-party owned material protected by copyright is included has been sought and cleared where possible. Every reasonable effort has been made by the publisher (UCLES) to trace copyright holders, but if any items requiring clearance have unwittingly been included, the publisher will be pleased to make amends at the earliest possible opportunity.

To avoid the issue of disclosure of answer-related information to candidates, all copyright acknowledgements are reproduced online in the Cambridge Assessment International Education Copyright Acknowledgements Booklet. This is produced for each series of examinations and is freely available to download at www.cambridgeinternational.org after the live examination series.

Cambridge Assessment International Education is part of Cambridge Assessment. Cambridge Assessment is the brand name of the University of Cambridge Local Examinations Syndicate (UCLES), which is a department of the University of Cambridge.

© UCLES 2023