Cambridge Assessment International Education

Cambridge IGCSE™

CANDIDATE NAME									
CENTRE NUMBER						CANDIDATE NUMBER				

PHYSICS **0625/42**

Paper 4 Theory (Extended) **May/June 2023**

1 hour 15 minutes

You must answer on the question paper.

No additional materials are needed.

INSTRUCTIONS

- Answer **all** questions.
- Use a black or dark blue pen. You may use an HB pencil for any diagrams or graphs.
- Write your name, centre number and candidate number in the boxes at the top of the page.
- Write your answer to each question in the space provided.
- Do **not** use an erasable pen or correction fluid.
- Do **not** write on any bar codes.
- You may use a calculator.
- You should show all your working and use appropriate units.
- Take the weight of 1.0 kg to be 9.8 N (acceleration of free fall = 9.8 m / s^2).

INFORMATION

- The total mark for this paper is 80.
- The number of marks for each question or part question is shown in brackets [ ].

This document has **16** pages. Any blank pages are indicated.

© UCLES 2023

1 **(a)** Fig. 1.1 shows a helicopter which is stationary at a height of 1500 m above the ground.

View solution

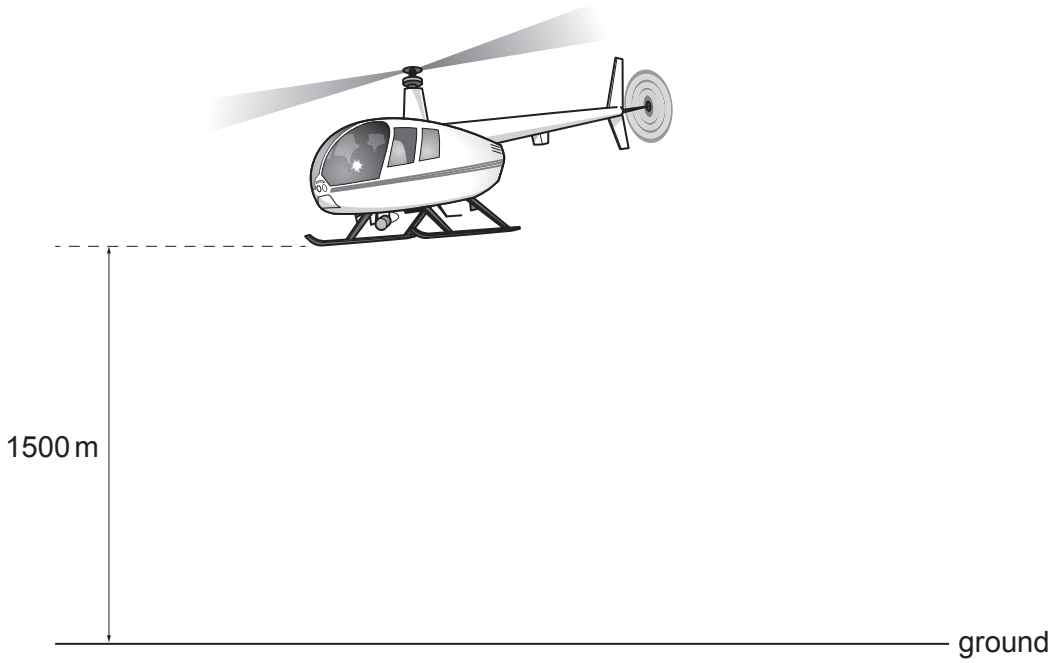

Fig. 1.1 (not to scale)

(i) State the **two** conditions necessary for the helicopter to remain in equilibrium.

condition 1 .....

.....

condition 2 .....

.....

[2]

(ii) The mass of the helicopter is 3200 kg.

Calculate the change in the gravitational potential energy of the helicopter as it rises from the ground to 1500 m.

View solution

change in gravitational potential energy = ... [2]

© UCLES 2023

(b) Fig. 1.2 shows a vertical speed–time graph for a parachutist who jumps from a stationary hot-air balloon.

View solution

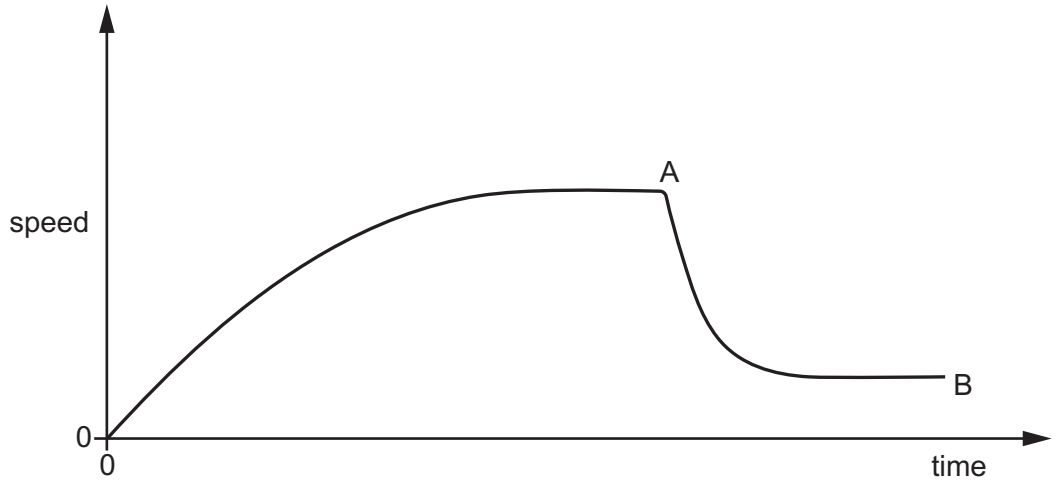

Fig. 1.2

The parachutist jumps from the balloon at time = 0 and reaches the ground at B. The point A indicates when the parachute opens.

(i) On Fig. 1.2, label a point on the graph where the acceleration is:
- zero with '1'
- negative with '2'
- decreasing with '3'. [3]

(ii) Explain, in terms of forces, the changes in motion which occur from when the parachutist leaves the hot-air balloon until point A.

.....

.....

.....

.....

.....

.....

.....

..... [4]

[Total: 11]

View solution

2 A student catches a cricket ball. The speed of the ball immediately before it is caught is 18 m / s. The mass of the cricket ball is 160 g.

(a) Calculate the kinetic energy stored in the cricket ball immediately before it is caught.

View solution

kinetic energy = ... [3]

(b) It takes 0.12 s to catch the ball and bring it to rest.

View solution

Calculate the average force exerted on the ball.

average force = ... [2]

(c) As the student catches the ball, she moves her hands backwards.

View solution

Explain the effect of this action on the student's hands.

.....

..... [1]

[Total: 6]

3 **(a)** Fig. 3.1 shows a person moving across an ice-covered pond to reach a ball on the ice.

View solution

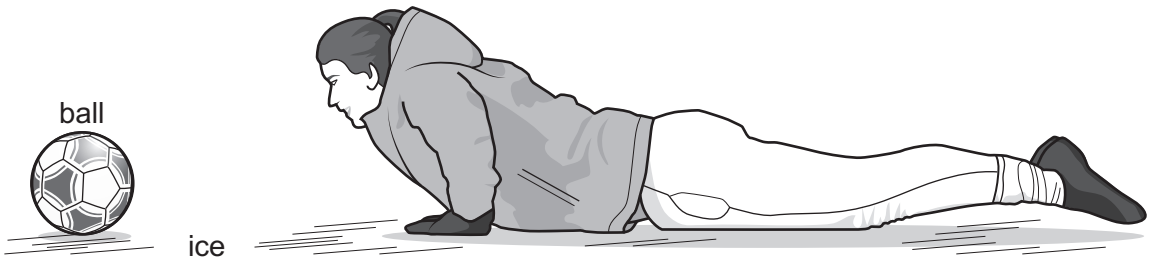

Fig. 3.1

Explain why this way of moving across the ice is safer than walking. Use your understanding of pressure in your answer.

.....

.....

.....

..... [3]

(b) Fig. 3.2 shows a side view of the pond with a layer of ice floating freely on the water.

View solution

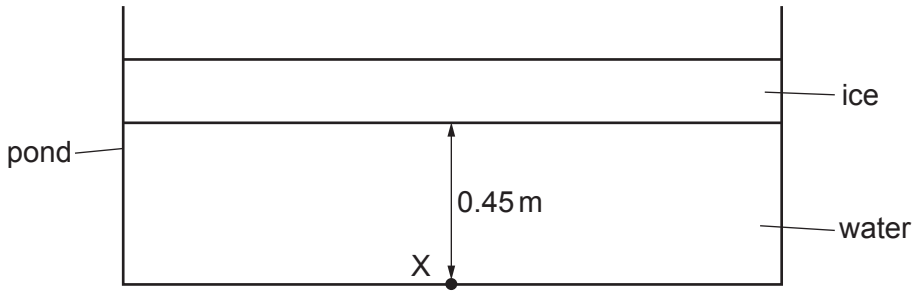

Fig. 3.2

The surface area of the pond is 5.0 m^2.
The mass of the ice is 690 kg.
The density of water is 1000 kg / m^3.
Point X is 0.45 m below the ice.

Calculate the pressure at point X due to the ice and the water.

pressure = ... [4]

[Total: 7]

4 **(a)** The temperature of a fixed mass of gas at constant volume is decreased.

State and explain, in terms of particles, how the pressure of the gas changes.

View solution

.....

.....

.....

..... [3]

(b) **(i)** State the value of absolute zero in °C.

View solution

value of absolute zero = ... °C [1]

(ii) Explain what is meant by the term absolute zero. Refer to particles in your answer.

View solution

.....

.....

..... [2]

(c) Cylinder 1 contains 350 cm^3 of gas at a pressure of 9.0×10^4 Pa. The gas is transferred to cylinder 2 and the pressure increases to 1.6×10^5 Pa. The temperature remains constant.

Calculate the volume of cylinder 2.

View solution

volume = ... [3]

[Total: 9]

© UCLES 2023

5 **(a)** Fig. 5.1 shows an electric heater used to heat a room.

View solution

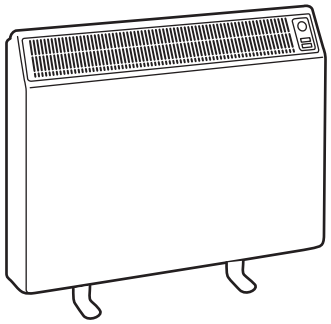

Fig. 5.1

The dimensions of the room are 4.5 m × 6.1 m × 2.4 m.
The density of air is 1.2 kg / m^3.

(i) Show that the mass of air in the room is 79 kg.

[2]

(ii) The power of the heater is 1100 W. The specific heat capacity of air is 1000 J / (kg °C).

Calculate the time taken to increase the temperature of the air in the room from 16.0 °C to 20.0 °C.

time = ... [4]

© UCLES 2023

(iii) Suggest **one** reason why the time calculated in **(a)(ii)** is the **minimum** time needed to increase the temperature of the air in the room from 16.0 °C to 20.0 °C.

.....

..... [1]

(b) Fig. 5.2 shows a cross-section of a double-glazed window in the room.

View solution

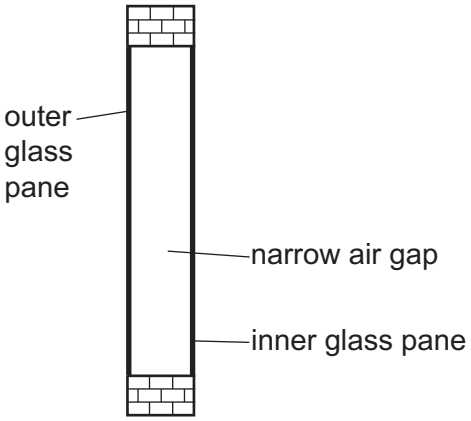

Fig. 5.2

State the main methods of thermal energy transfer from the room to outside which are reduced by this type of window.

..... [1]

[Total: 8]

© UCLES 2023

6 Two types of seismic waves are P-waves and S-waves.

View solution

(a) State the types of wave that P-waves and S-waves can be modelled as.

P-waves .....

S-waves .....

[2]

View solution

(b) The velocity of a P-wave in the Earth's solid crust is 7.2 km / s and its frequency is 4.5 Hz.

Calculate the wavelength of this P-wave.

wavelength = ... [3]

[Total: 5]

© UCLES 2023

7 Fig. 7.1 shows a container of oil.

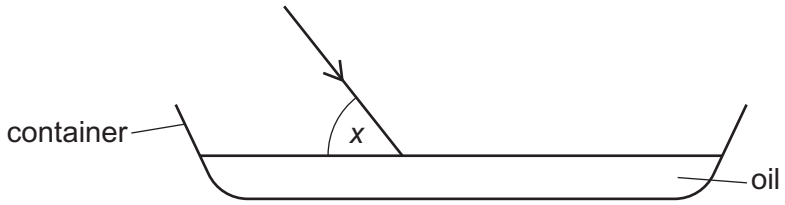

Fig. 7.1

A ray of light shines on the surface of the oil. The refractive index of the oil is 1.47.

View solution

(a) On Fig. 7.1, draw the normal at the point where the ray enters the oil. [1]

(b) The angle *x* is 56°.

View solution

Calculate the value of the angle of refraction.

angle of refraction = ... [3]

(c) State the approximate speed of light in air.

..... [1]

View solution

(d) Calculate the speed of light in the oil.

Give your answer to three significant figures.

View solution

speed = ... [2]

[Total: 7]

© UCLES 2023

8 **(a)** **(i)** State what is meant by a magnetic field.

View solution

.....

..... [1]

(ii) Define the direction of a magnetic field.

View solution

.....

..... [1]

(b) Fig. 8.1 shows a negatively charged metal sphere.

View solution

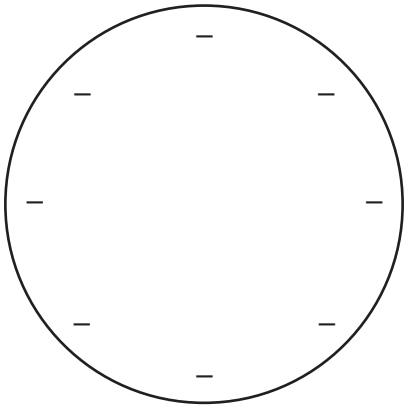

Fig. 8.1

On Fig. 8.1, draw **four** lines to show the electric field and its direction. [2]

(c) Fig. 8.2 shows a circuit.

View solution

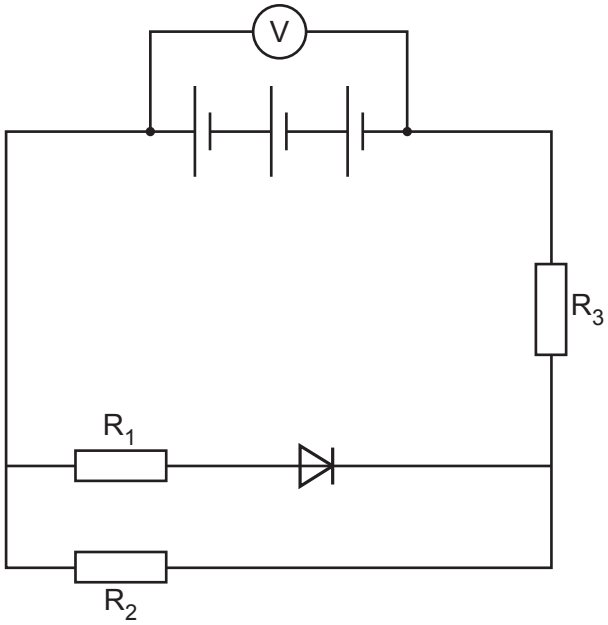

Fig. 8.2

The three cells are identical and have zero resistance.
The resistors R_1, R_2 and R_3 are identical.
The reading on the voltmeter is 6.0 V.
When the diode is conducting, it has zero resistance and zero potential difference (p.d.) across it.

(i) Determine the e.m.f. of one cell.

e.m.f. = ... [1]

(ii) Determine the ratio of the p.d. across R_2 to the p.d. across R_3.

View solution

..... [1]

(iii) All the cells are reversed.

View solution

1. State and explain the change in current in R_1.

.....

..... [1]

2. Determine the new value of the ratio of the p.d. across R_2 to the p.d. across R_3.

..... [1]

[Total: 8]

9 **(a)** Table 9.1 shows some properties and values for α-particles, β-particles and γ-radiation.

View solution

Complete Table 9.1.

Table 9.1

type of radiation	number of protons	number of neutrons	charge / C	stopped by
α	2		$+ 3.2 \times 10^{-19}$	thin sheet of paper
β		0		thin sheet of aluminium
γ	0			

[3]

(b) State how β-decay changes the nucleus of an atom.

View solution

..... [1]

(c) A radiation detector used in a laboratory detects a background count rate of 30 counts / min. A radioactive source is placed in front of the radiation detector. The initial reading on the detector is 550 counts / min. The half-life of the source is 25 minutes.

Calculate the expected reading on the detector after 75 minutes.

View solution

reading = ... counts / min [4]

(d) State **two** safety precautions taken when moving, using or storing radioactive sources in a laboratory.

1 .....

2 .....

[2]

View solution

[Total: 10]

© UCLES 2023

10 **(a)** State the equation that defines the average orbital speed v of a planet. State the meaning of any symbols you use.

.....

..... [2]

(b) Suggest why countries that are a significant distance from the Equator experience significant temperature variation throughout the year.

.....

.....

..... [1]

(c) Fill in the gaps in the paragraph about a star much more massive than the Sun.

View solution

The stage that follows the stable state in the life cycle of the star is the

..... stage.

It then explodes as a supernova to form a ..... , this leaves behind a

..... or a ..... .

[4]

(d) A galaxy is moving away from the Earth with a speed of 33 000 km / s.
The value of the Hubble constant is 2.2×10^{-18} per second.

View solution

Calculate the distance from the galaxy to the Earth. Give your answer in light-years.

distance = ... light-years [2]

[Total: 9]

BLANK PAGE

Permission to reproduce items where third-party owned material protected by copyright is included has been sought and cleared where possible. Every reasonable effort has been made by the publisher (UCLES) to trace copyright holders, but if any items requiring clearance have unwittingly been included, the publisher will be pleased to make amends at the earliest possible opportunity.

To avoid the issue of disclosure of answer-related information to candidates, all copyright acknowledgements are reproduced online in the Cambridge Assessment International Education Copyright Acknowledgements Booklet. This is produced for each series of examinations and is freely available to download at www.cambridgeinternational.org after the live examination series.

Cambridge Assessment International Education is part of Cambridge Assessment. Cambridge Assessment is the brand name of the University of Cambridge Local Examinations Syndicate (UCLES), which is a department of the University of Cambridge.

© UCLES 2023