Cambridge Assessment International Education

Cambridge IGCSE™

CANDIDATE NAME									
CENTRE NUMBER						CANDIDATE NUMBER				

PHYSICS **0625/51**

Paper 5 Practical Test **May/June 2023**

1 hour 15 minutes

You must answer on the question paper.

You will need: The materials and apparatus listed in the confidential instructions

INSTRUCTIONS

- Answer **all** questions.
- Use a black or dark blue pen. You may use an HB pencil for any diagrams or graphs.
- Write your name, centre number and candidate number in the boxes at the top of the page.
- Write your answer to each question in the space provided.
- Do **not** use an erasable pen or correction fluid.
- Do **not** write on any bar codes.
- You may use a calculator.
- You should show all your working and use appropriate units.

INFORMATION

- The total mark for this paper is 40.
- The number of marks for each question or part question is shown in brackets [ ].

For Examiner's Use	
1	
2	
3	
4	
Total	

This document has **12** pages. Any blank pages are indicated.

© UCLES 2023

1 In this experiment, you will investigate the balancing of a metre ruler.

Carry out the following instructions, referring to Fig. 1.1.

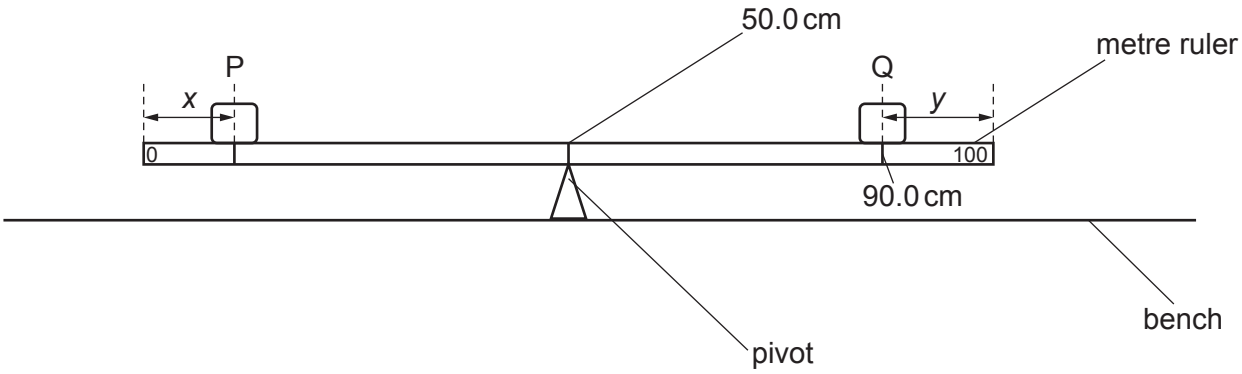

Fig. 1.1

(a) • Place the metre ruler on the pivot at the 50.0 cm mark with its scale facing upwards.
• Place the object Q with its centre on the metre ruler at the 90.0 cm mark.

View solution

Record the distance *y* from the centre of Q to the 100.0 cm end of the ruler.

y = ... cm [1]

(b) • Place a load P of weight *P* = 2.0 N on the metre ruler.
• Adjust the position of P so that the metre ruler is as near as possible to being balanced.

(i) Measure, and record in Table 1.1, the distance *x* from the centre of P to the zero end of the ruler. Record the weight *P*. [1]

(ii) Repeat the steps above, using loads of weight *P* = 3.0 N, 4.0 N, 5.0 N and 6.0 N.

Record all the values of *P* and *x* in Table 1.1. Ensure that the position of object Q on the metre ruler does **not** change.

View solution

Table 1.1

P / N	*x* / cm

[3]

(c) Plot a graph of P / N (y-axis) against x / cm (x-axis).

View solution

Draw the best-fit line.

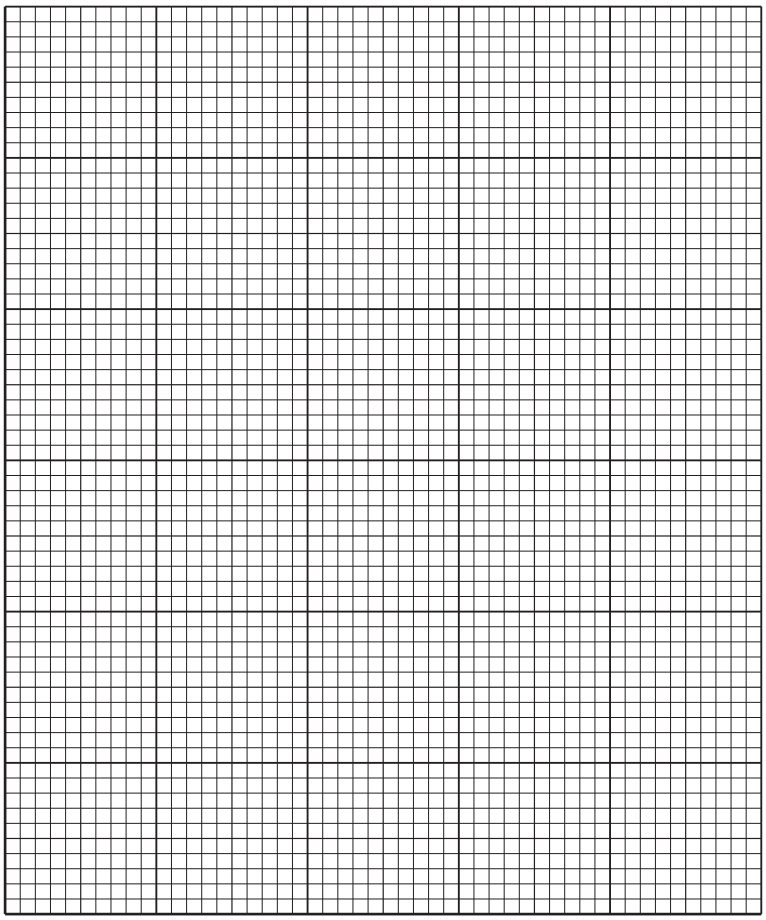

[4]

(d) Use the graph to find the value of x required to balance the ruler when $P = 3.5$ N.

View solution

Show clearly on the graph how you determined the value of x.

x = ... cm [2]

[Total: 11]

© UCLES 2023

2 In this experiment, you will investigate the cooling of water.

Carry out the following instructions, referring to Fig. 2.1.

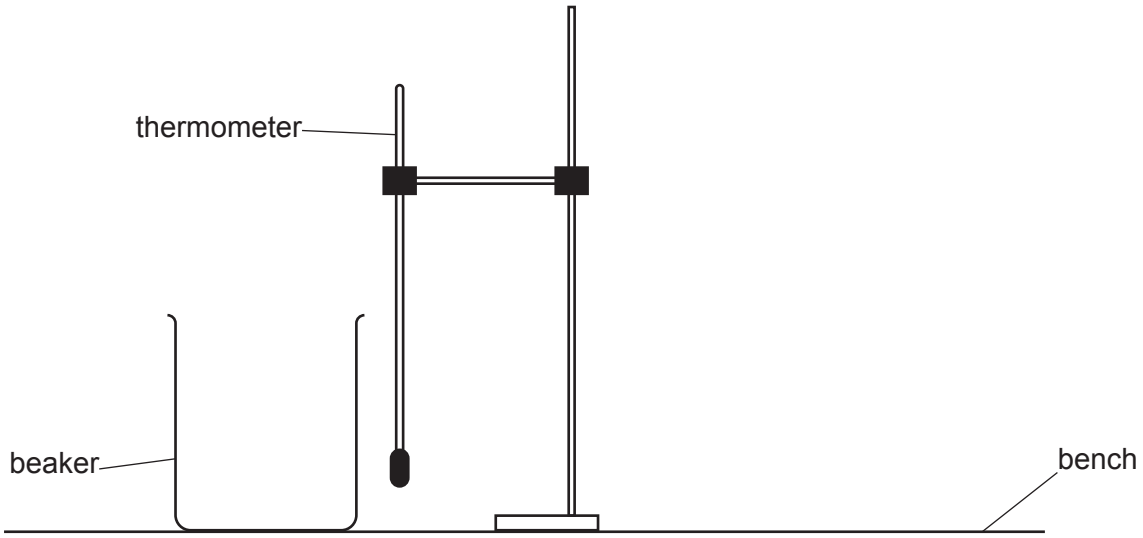

Fig. 2.1

(a) Use the thermometer to measure the room temperature θ_R.

View solution

θ_R = ... [1]

(b) (i) Pour 200 cm^3 of hot water into the beaker. Place the thermometer in the hot water in the beaker.

Record in Table 2.1 the temperature θ of the hot water at time t = 0. Immediately start the stop-watch.

Continue recording the temperature in Table 2.1 at 30 s intervals until you have seven sets of readings. [2]

(ii) Complete the column headings in Table 2.1.

View solution

Table 2.1

t/	θ/
0	
30	
60	
90	
120	
150	
180	

[1]

© UCLES 2023

(c) **(i)** Calculate the decrease in temperature $\Delta\theta$ between $t = 0$ and $t = 180$ s.

$\Delta\theta =$ ..... [1]

(ii) Calculate the average rate of cooling R of the water using the equation $R = \frac{\Delta\theta}{\Delta t}$, where $\Delta t = 180$ s. Include the unit.

View solution

$R =$ ..... [2]

(d) A student states that the average rate of cooling of the water decreases as the temperature comes nearer to room temperature.

(i) Suggest **one** change to the experiment that you could make to test the statement.

View solution

.....

..... [1]

(ii) Suggest how to display the results to make it easier to see the trend in the rate of cooling.

.....

.....

..... [2]

(e) Explain briefly why it is good practice to read the thermometer scale at right angles.

View solution

.....

..... [1]

[Total: 11]

© UCLES 2023

3 In this experiment, you will investigate the refraction of light using a semicircular transparent block.

Carry out the following instructions using the separate ray-trace sheet provided. You may refer to Fig. 3.1 and Fig. 3.2 for guidance.

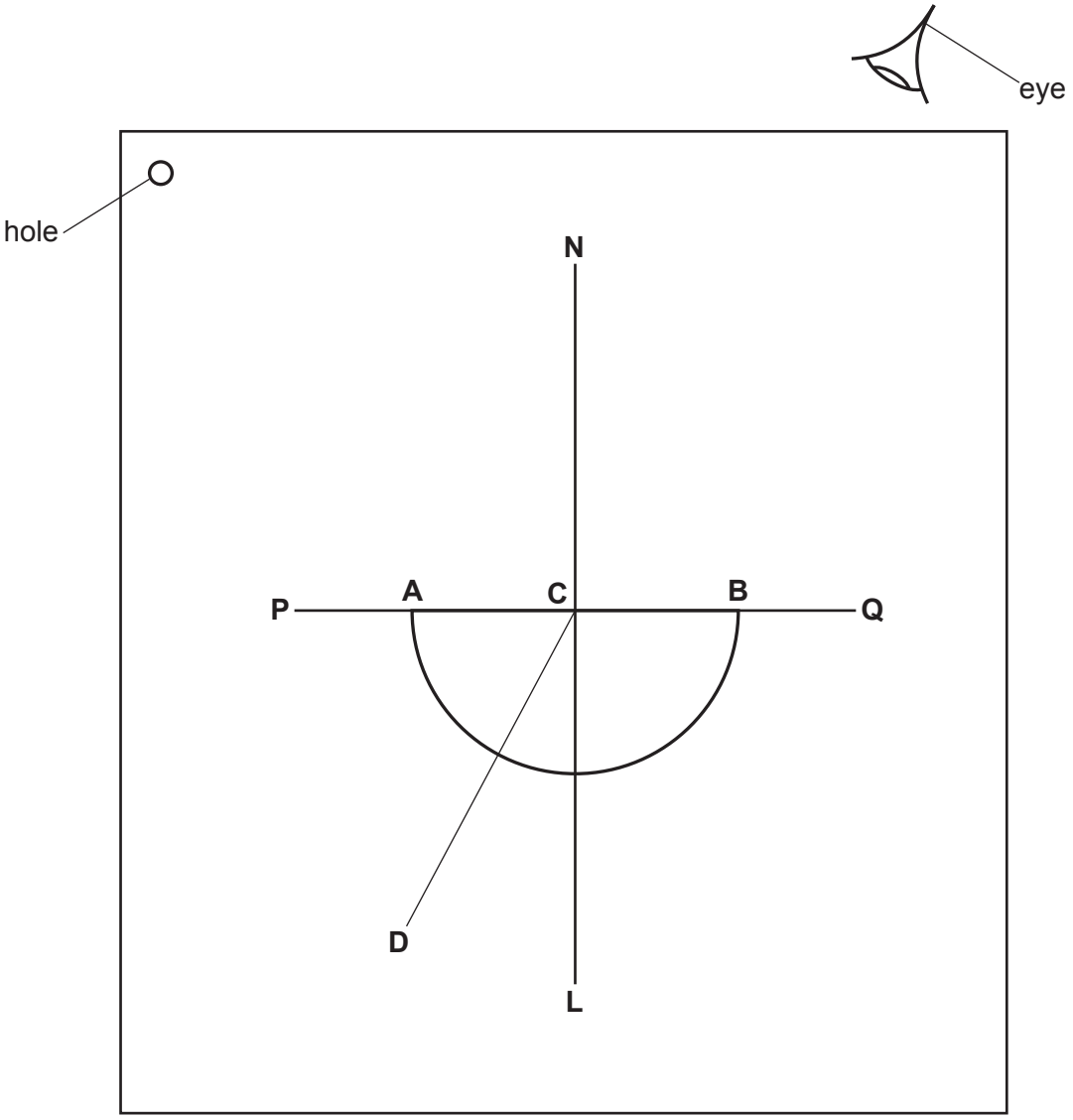

Fig. 3.1

(a)
- Draw a line across the ray-trace sheet supplied, approximately in the middle. Label the line **PQ**.
- Place the transparent block, largest face down, with the straight side on the line **PQ** and the curved side below the line.
- Draw round the outline of the block. Label the ends of the straight side of the block **A** and **B**.
- Remove the block and draw the normal **NL** through the centre of **AB**. Continue the normal so that it passes through the curved side of the block.
- Label the point **C** where the normal **NL** crosses **AB**.

[1]

View solution

© UCLES 2023

(b)
- Draw the line **DC** at an angle $i = 30°$ to the normal, as shown in Fig. 3.1.
- Place the paper on the pin board.
- Place two pins, P_1 and P_2, on line **DC** at a suitable distance apart for this experiment.
- Replace the block and look from the position of the eye shown in Fig. 3.1 to observe the images of P_1 and P_2 through side **AB** of the block. Adjust your line of sight until the images of P_1 and P_2 appear one behind the other.
- Place two pins, P_3 and P_4, between your eye and the block so that P_3, P_4, and the images of P_1 and P_2 seen through the block, appear one behind the other.
- Label the positions of P_1, P_2, P_3 and P_4.
- Remove the block and the pins.
- Draw a line joining the positions of P_3 and P_4. Continue the line to **AB**.
- Label **E**, the end of the line furthest from **AB**.

View solution

[3]

(c) Measure the acute angle θ between the line **NL** and the line **CE**. (An acute angle is less than 90°.)

View solution $\theta =$ .....° [2]

(d) State **one** precaution that you take to produce an accurate ray trace.

View solution

.....

..... [1]

(e) Place the transparent block on the ray-trace sheet in the position shown in Fig. 3.2.

View solution

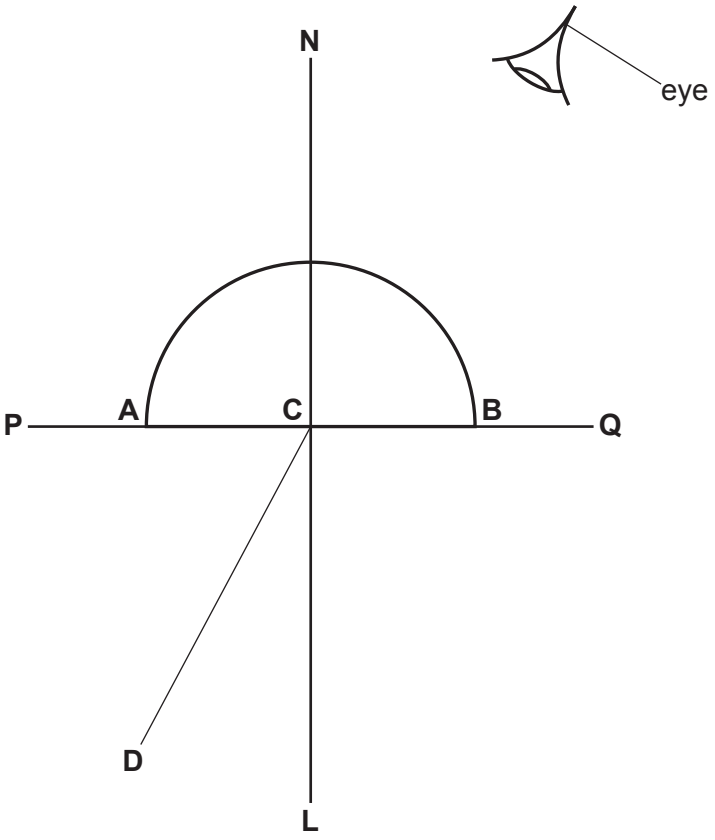

Fig. 3.2

- Replace pins P_1 and P_2 on line **DC** in the same positions used in **(b)**.
- Observe the images of P_1 and P_2 through the curved side of the block. Adjust your line of sight until the images of P_1 and P_2 appear one behind the other.
- Place two pins, P_5 and P_6, between your eye and the block so that P_5, P_6, and the images of P_1 and P_2 seen through the block, appear one behind the other.
- Label the positions of P_5 and P_6.
- Remove the block and the pins.
- Draw a line joining the positions of P_5 and P_6. Continue the line to **AB**.
- Label **F**, the end of the line furthest from **AB**.

[2]

(f) Measure the acute angle θ between the line **NL** and the line **CF**. (An acute angle is less than 90°.)

θ = ... ° [2]

[Total: 11]

Tie your ray-trace sheet into this question booklet between pages 8 and 9.

View solution

BLANK PAGE

4 A student investigates the change in resistance of a lamp filament when the current in the lamp is increased.

View solution

The following apparatus is available:

- a power supply
- a low-voltage filament lamp
- an ammeter
- a voltmeter
- connecting wires.

Other apparatus normally found in a school laboratory is also available.

Plan an experiment to investigate the change in resistance of the lamp filament when the current in the lamp is increased.

Resistance R is given by the equation $R = \frac{V}{I}$, where V is the potential difference (p.d.) across the lamp and I is the current in the lamp.

You are **not** required to do this investigation.

You should:

- draw a diagram of the circuit used
- explain briefly how to do the investigation, including how to change the current
- draw a table, or tables, with column headings, to show how to display your readings (you are **not** required to enter any readings in the table)
- explain how to use your readings to reach a conclusion.

© UCLES 2023

.....

.....

.....

.....

.....

.....

.....

.....

.....

.....

.....

.....

.....

.....

.....

.....

.....

..... [7]

BLANK PAGE

Permission to reproduce items where third-party owned material protected by copyright is included has been sought and cleared where possible. Every reasonable effort has been made by the publisher (UCLES) to trace copyright holders, but if any items requiring clearance have unwittingly been included, the publisher will be pleased to make amends at the earliest possible opportunity.

To avoid the issue of disclosure of answer-related information to candidates, all copyright acknowledgements are reproduced online in the Cambridge Assessment International Education Copyright Acknowledgements Booklet. This is produced for each series of examinations and is freely available to download at www.cambridgeinternational.org after the live examination series.

Cambridge Assessment International Education is part of Cambridge Assessment. Cambridge Assessment is the brand name of the University of Cambridge Local Examinations Syndicate (UCLES), which is a department of the University of Cambridge.

© UCLES 2023