Cambridge Assessment International Education

Cambridge IGCSE™

CANDIDATE NAME									
CENTRE NUMBER						CANDIDATE NUMBER				

PHYSICS **0625/53**

Paper 5 Practical Test **May/June 2023**

1 hour 15 minutes

You must answer on the question paper.

You will need: The materials and apparatus listed in the confidential instructions

INSTRUCTIONS

- Answer **all** questions.
- Use a black or dark blue pen. You may use an HB pencil for any diagrams or graphs.
- Write your name, centre number and candidate number in the boxes at the top of the page.
- Write your answer to each question in the space provided.
- Do **not** use an erasable pen or correction fluid.
- Do **not** write on any bar codes.
- You may use a calculator.
- You should show all your working and use appropriate units.

INFORMATION

- The total mark for this paper is 40.
- The number of marks for each question or part question is shown in brackets [ ].

For Examiner's Use	
1	
2	
3	
4	
Total	

This document has **12** pages. Any blank pages are indicated.

© UCLES 2023

1 In this experiment, you will determine the mass M_R of a metre ruler using a balancing method.

Carry out the following instructions, referring to Fig. 1.1.

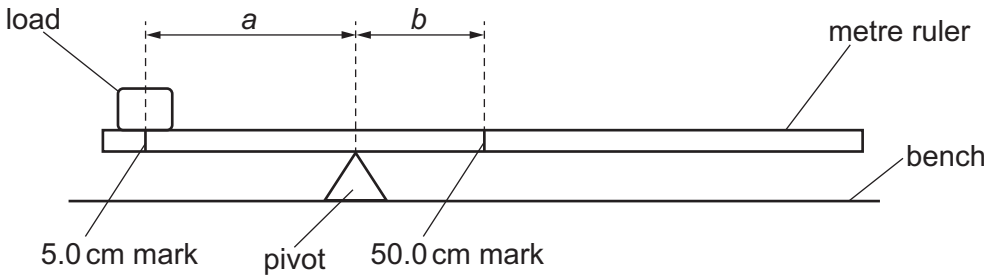

Fig. 1.1

(a) (i) Place a load of mass M = 20 g with its centre at the 5.0 cm mark of the metre ruler.

View solution

Explain briefly how you make sure that the centre of the load is at the 5.0 cm mark. You may draw a diagram if it helps your explanation.

.....

.....

..... [1]

(ii) Place the metre ruler on the pivot. Adjust the position of the metre ruler on the pivot until the metre ruler is as near as possible to being balanced. Check that the position of the centre of the load remains at the 5.0 cm mark.

View solution

Record, in Table 1.1, the scale reading p on the ruler at the position of the pivot.

Calculate, and record in Table 1.1:

- The distance a between the 5.0 cm mark and the pivot.
  Use your value of p and the equation $a = p - 5.0$.
- The distance b between the 50.0 cm mark and the pivot.
  Use your value of p and the equation $b = 50.0 - p$.

Repeat this procedure for values of M = 40 g, 60 g, 80 g and 100 g.

[2]

© UCLES 2023

Table 1.1

M/g	p/cm	a/cm	b/cm	$\frac{b}{a}$
20				
40				
60				
80				
100				

(b) For each value of M, calculate and record in Table 1.1 the value $\frac{b}{a}$. [1]

View solution

(c) Plot a graph of M/g (y-axis) against $\frac{b}{a}$ (x-axis).

Draw the best-fit line.

View solution

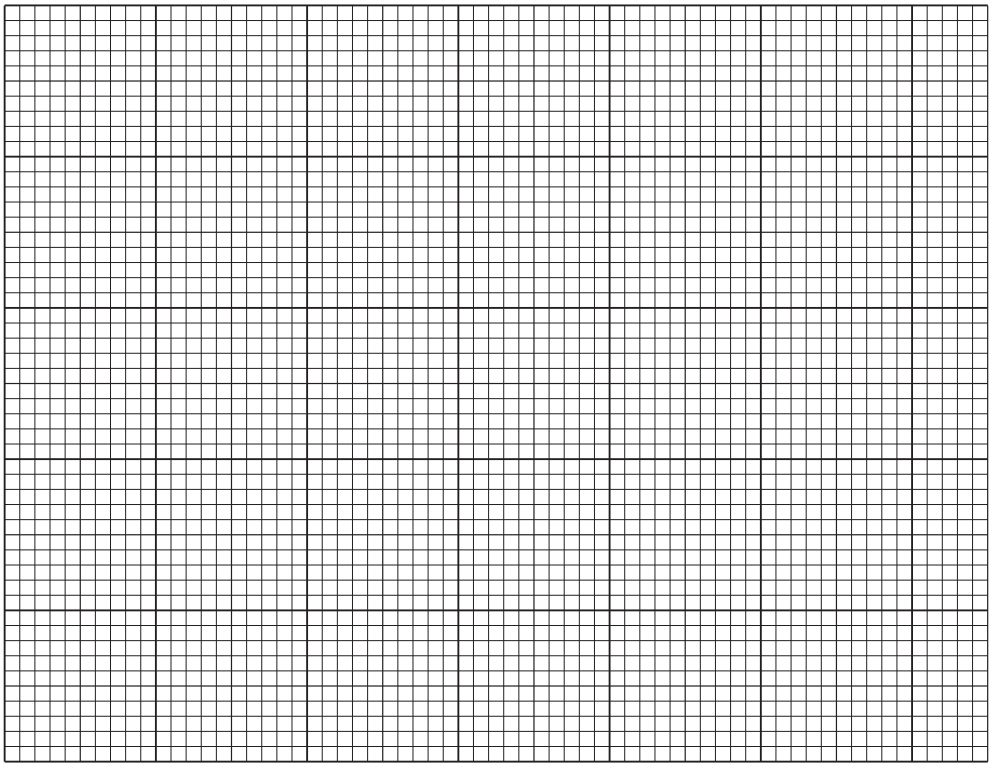

[4]

(d) **(i)** Determine the gradient G of the graph. Show clearly on the graph how you obtained the necessary information.

View solution

G = ... [1]

© UCLES 2023

(ii) The mass M_R of the metre ruler is numerically equal to G.

View solution

Write down the value of M_R in this experiment. Include the unit.

M_R = ... [1]

(e) The determination of M_R by this method assumes that the centre of mass of the metre ruler is at the 50.0 cm mark.

View solution

A student finds that the centre of mass of his metre ruler is at the 48.7 cm mark.

Suggest how he changes the procedure in **(a)(ii)** to allow for this.

.....

.....

..... [1]

[Total: 11]

© UCLES 2023

2 In this experiment, you will investigate circuits containing different combinations of resistors. Fig. 2.1 shows **circuit A** which has been set up for you.

Carry out the following instructions, referring to Fig. 2.1.

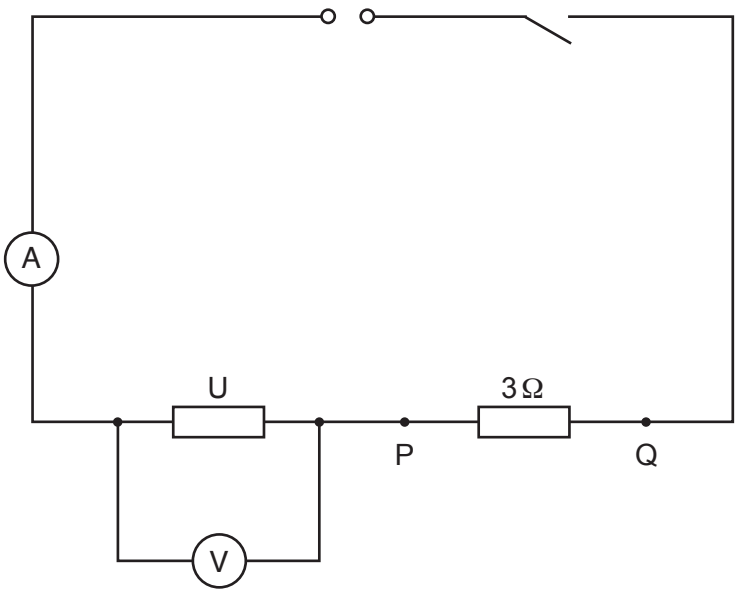

Fig. 2.1

View solution

(a) Circuit A

Close the switch.

Measure, and record in Table 2.1, the potential difference (p.d.) V across resistor U.

Measure, and record in Table 2.1, the current I in the circuit.

Open the switch.

Table 2.1

circuit	V/V	I/A	R/Ω
A			
B			
C			

[1]

© UCLES 2023

(b) Circuit B

Connect a second 3 Ω resistor between terminals P and Q so that it is in parallel with the first 3 Ω resistor, as shown in Fig. 2.2. The rest of the circuit must remain as in Fig. 2.1.

View solution

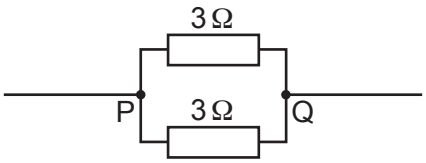

Fig. 2.2

Close the switch.

Measure, and record in Table 2.1, the potential difference (p.d.) *V* across resistor U.

Measure, and record in Table 2.1, the current *I* in the circuit.

Open the switch.

[1]

(c) Circuit C

Connect a third 3 Ω resistor between terminals P and Q so that it is in parallel with the other 3 Ω resistors, as shown in Fig. 2.3. The rest of the circuit must remain as in Fig. 2.1.

View solution

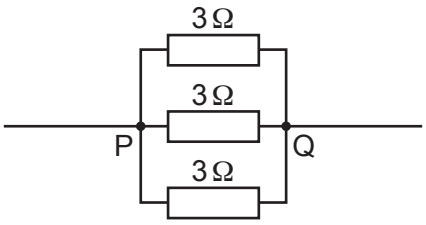

Fig. 2.3

Close the switch.

Measure, and record in Table 2.1, the potential difference (p.d.) *V* across resistor U.

Measure, and record in Table 2.1, the current *I* in the circuit.

Open the switch.

[1]

(d) (i) Calculate, and record in Table 2.1, the resistance *R* of resistor U for each combination of resistors.
Use your readings from Table 2.1 and the equation $R = \frac{V}{I}$.

View solution

[3]

© UCLES 2023

(ii) A student suggests that the values of *R* should be the same.

State whether your results support this suggestion. Justify your statement by reference to values from your results.

statement .....

justification .....

.....

.....

[2]

(e) A student determines the resistance of resistor U using a variable resistor to control the current in the circuit.

(i) Briefly explain **one** advantage of using a variable resistor for this purpose rather than the procedure carried out in **(a)**, **(b)** and **(c)**.

.....

.....

..... [1]

(ii) Draw the circuit symbol for a variable resistor.

View solution

[1]

(f) Another student suggests that potential difference and current for resistor U are proportional.

State how a graph of potential difference against current for resistor U can confirm this suggestion.

.....

.....

.....

..... [1]

[Total: 11]

View solution

3 In this experiment, you will investigate the reflection of light by two mirrors.

Carry out the following instructions, using the separate ray-trace sheet provided.
You may refer to Fig. 3.1 for guidance.

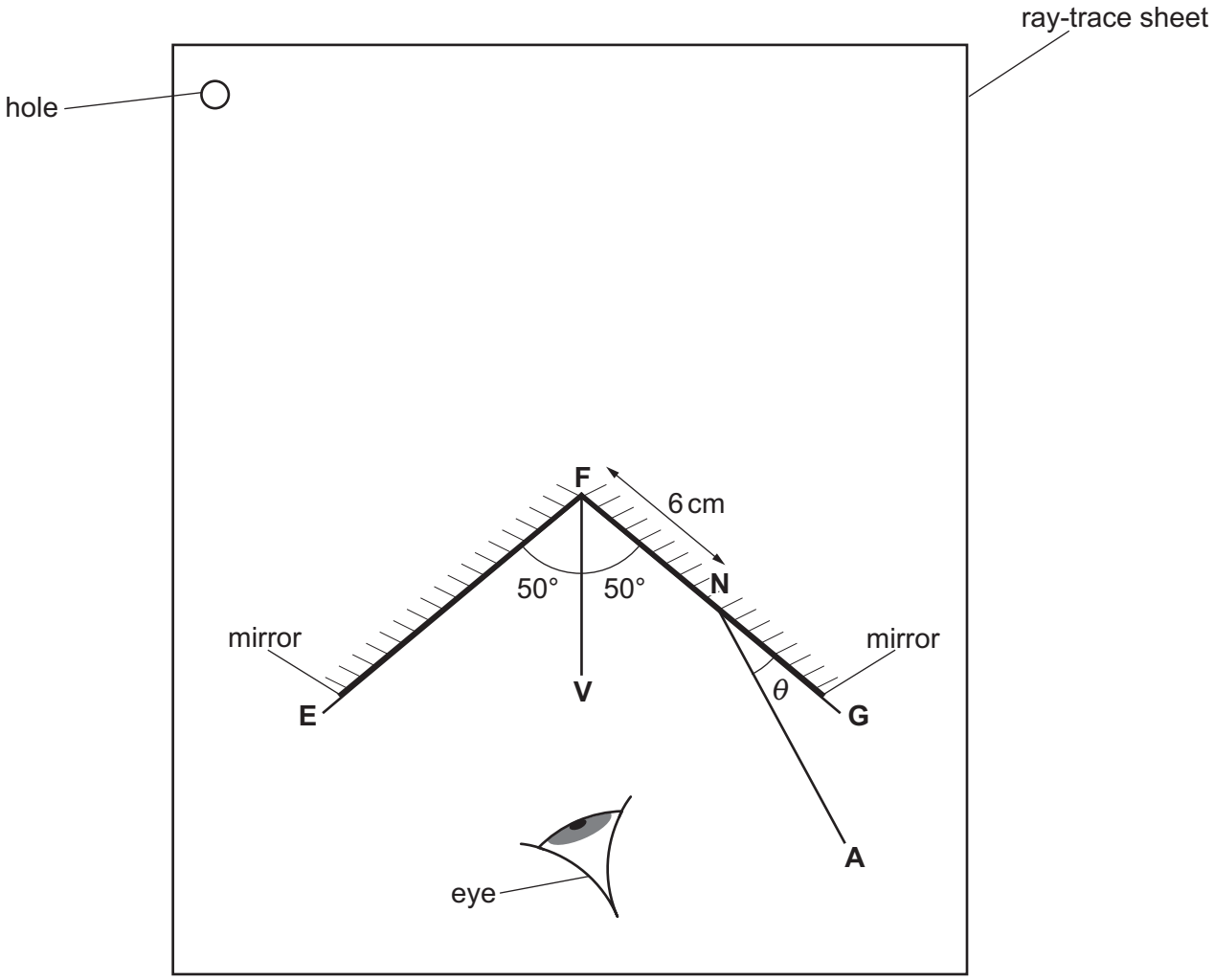

Fig. 3.1

(a)
- Mark and label a point **F** approximately in the centre of your ray-trace sheet.
- Draw a 5 cm long line **FV**, from point **F**, as shown in Fig. 3.1.
- Draw two lines, **FG** and **FE**, each 9 cm long and at 50° either side of **FV**, as shown in Fig. 3.1.
- Draw a normal to line **FG**, crossing **FG** at a point **N**, 6 cm from **F**.
- Label the lower end of the normal with the letter **L**.
- Draw a line **NA**, as shown in Fig. 3.1, 8 cm long and at an angle θ_1 = 15° to **NG**.

View solution

[2]

(b)
- Place the plane mirrors on lines **FG** and **FE**, with their reflecting surfaces facing inwards, as shown in Fig. 3.1.
- Place two pins, P_1 and P_2, on line **NA**, a suitable distance apart for accurate ray tracing.
- Label the positions of P_1 and P_2.
- View the images of P_1 and P_2 from the direction indicated by the eye in Fig. 3.1.
- Place two pins, P_3 and P_4, a suitable distance apart, so that pins P_3 and P_4, and the images of P_1 and P_2, all appear one behind the other.
- Label the positions of P_3 and P_4.
- Remove the mirrors and pins from the ray-trace sheet.

View solution

[1]

© UCLES 2023

(c) • Draw a line joining P_3 and P_4. Extend this line 10 cm above **FE**.
• Label the lower end of this line with the letter **B**. Label the upper end with the letter **R**.

[1]

(d) (i) • Draw a new line **NA**, 8 cm long and at an angle $\theta_2 = 40°$.
• Repeat the steps in **(b)**.
• Draw a line joining the new positions of P_3 and P_4. Extend this line until it crosses **BR**.
• Label the lower end of this line with the letter **C**. Label the upper end with the letter **T**.

View solution

[2]

(ii) Measure the acute angle α between lines **BR** and **CT**. (An acute angle is less than 90°.)

α = ...° [1]

(iii) A student thinks that there is a relationship between angle α and the values of angle θ_1 from **(a)** and angle θ_2 from **(d)(i)**.

State what your results suggest that relationship could be. Justify your answer by reference to values from your results.

statement .....

justification .....

.....

[2]

(e) Suggest **one** precaution to take in this type of experiment to ensure accurate results.

View solution

.....

..... [1]

(f) Suggest **one** reason why different students, all doing this experiment carefully, may **not** obtain identical results.

.....

..... [1]

[Total: 11]

Tie your ray-trace sheet into this booklet between pages 8 and 9.

View solution

4 A student investigates the rate of cooling of hot water in a container which has a lid.

Plan an experiment which will enable him to compare the effect of lids of different thicknesses on the rate of cooling.

View solution

The apparatus available includes:

- a beaker
- a supply of hot water
- insulating material from which lids can be cut.

You are **not** required to do the experiment.

In your plan, you should:

- list any additional apparatus needed
- explain briefly how to do the experiment, including the measurements to take so that the rate of cooling can be determined
- state the key variables to keep constant
- draw a table, or tables, with column headings, to show how to display the readings (you are **not** required to enter any readings in the table)
- explain how to use the readings to reach a conclusion.

You may draw a diagram if it helps to explain your plan.

.....

.....

.....

.....

.....

.....

.....

.....

.....

.....

.....

© UCLES 2023

.....

.....

.....

.....

.....

.....

.....

.....

.....

.....

..... [7]

BLANK PAGE

Permission to reproduce items where third-party owned material protected by copyright is included has been sought and cleared where possible. Every reasonable effort has been made by the publisher (UCLES) to trace copyright holders, but if any items requiring clearance have unwittingly been included, the publisher will be pleased to make amends at the earliest possible opportunity.

To avoid the issue of disclosure of answer-related information to candidates, all copyright acknowledgements are reproduced online in the Cambridge Assessment International Education Copyright Acknowledgements Booklet. This is produced for each series of examinations and is freely available to download at www.cambridgeinternational.org after the live examination series.

Cambridge Assessment International Education is part of Cambridge Assessment. Cambridge Assessment is the brand name of the University of Cambridge Local Examinations Syndicate (UCLES), which is a department of the University of Cambridge.

© UCLES 2023