Cambridge Assessment International Education

Cambridge IGCSE™

CANDIDATE NAME									
CENTRE NUMBER						CANDIDATE NUMBER				

PHYSICS **0625/62**

Paper 6 Alternative to Practical **May/June 2023**

1 hour

You must answer on the question paper.

No additional materials are needed.

INSTRUCTIONS

- Answer **all** questions.
- Use a black or dark blue pen. You may use an HB pencil for any diagrams or graphs.
- Write your name, centre number and candidate number in the boxes at the top of the page.
- Write your answer to each question in the space provided.
- Do **not** use an erasable pen or correction fluid.
- Do **not** write on any bar codes.
- You may use a calculator.
- You should show all your working and use appropriate units.

INFORMATION

- The total mark for this paper is 40.
- The number of marks for each question or part question is shown in brackets [ ].

This document has **12** pages. Any blank pages are indicated.

© UCLES 2023

1 A student investigates the stretching of a spring.

Fig. 1.1 shows the set-up.

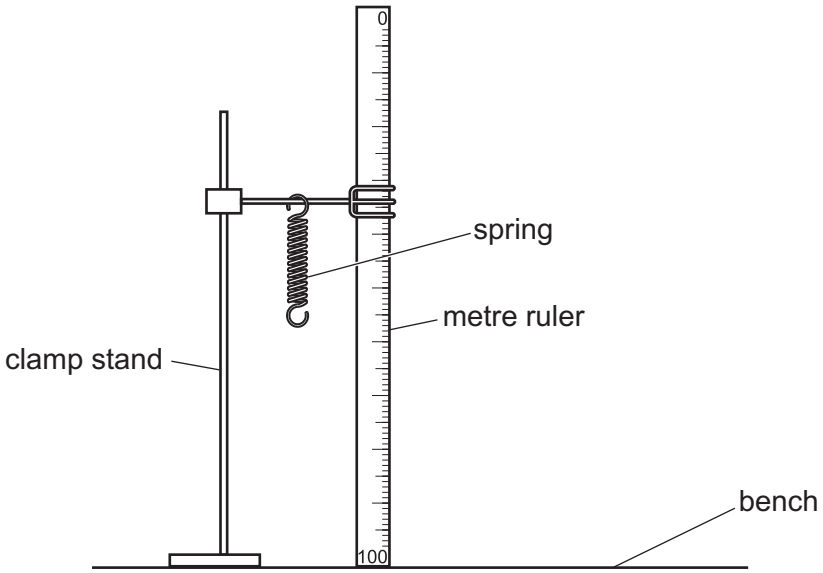

Fig. 1.1

(a) The value l_0 is the length of the spring when the load L is 0.0 N.

The student measures the length l_0 of the spring. She records l_0 = 16 mm in Table 1.1.

Draw a diagram of the spring to show clearly the length l_0 of the spring.

View solution

[1]

(b) The student suspends a load L = 0.20 N from the spring. She records the new length l of the spring in Table 1.1.

She repeats the procedure using loads L = 0.40 N, 0.60 N, 0.80 N and 1.00 N. The readings are shown in Table 1.1.

(i) Calculate the extension e of the spring for each load using the equation $e = (l - l_0)$.

View solution

Record the values of e in Table 1.1.

[2]

© UCLES 2023

(ii) Complete the column headings in Table 1.1.

View solution

Table 1.1

L /	*l*/	*e* /
0.00	16	0
0.20	18	
0.40	21	
0.60	23	
0.80	24	
1.00	26	

[1]

(c) Plot a graph of *L* (*y*-axis) against *e* (*x*-axis).

View solution

Draw the best-fit line.

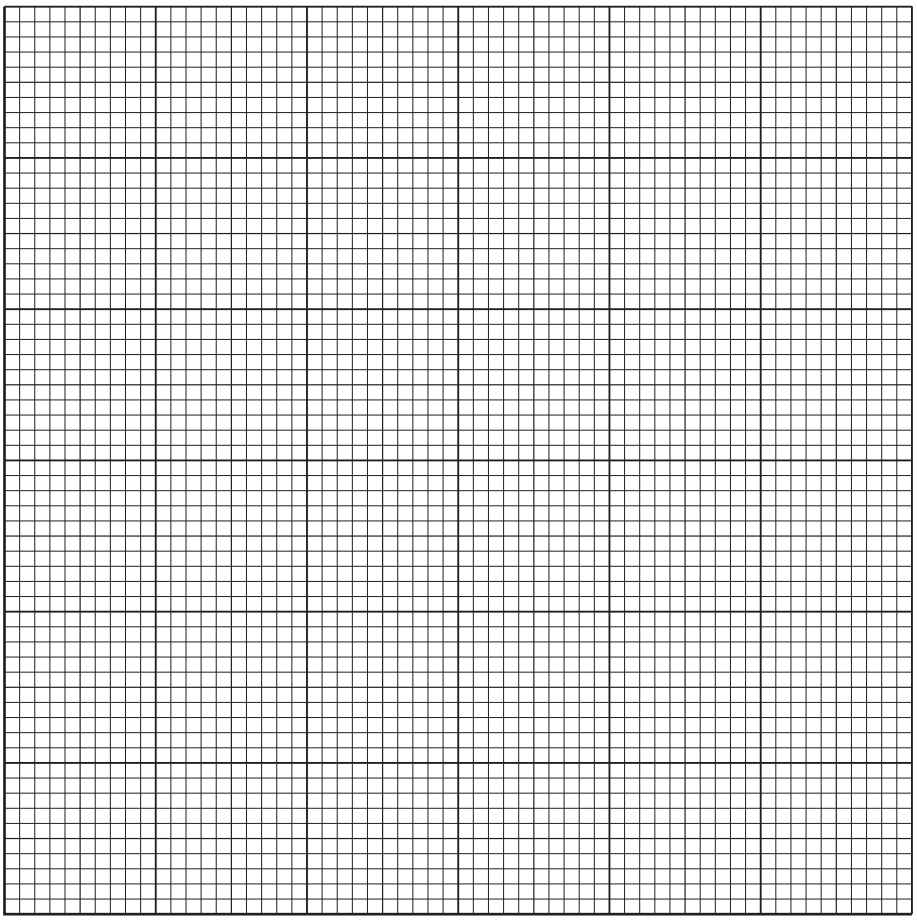

[4]

(d) Use the graph to determine e_A, the extension produced by a load of 0.50 N. Show clearly on the graph how you obtained the necessary information.

View solution

e_A = ... [3]

[Total: 11]

© UCLES 2023

2 A student investigates the cooling of water.

Fig. 2.1 shows the set-up.

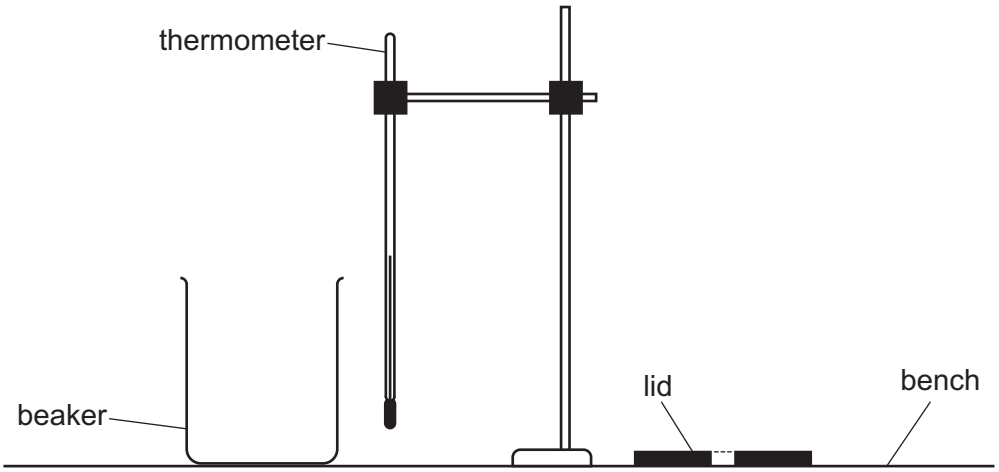

Fig. 2.1

(a) The thermometer in Fig. 2.2 shows the room temperature θ_R at the beginning of the experiment. Record θ_R.

View solution

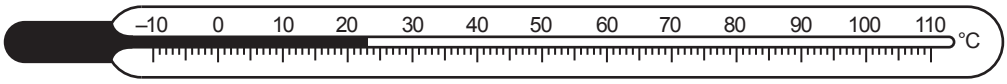

Fig. 2.2

θ_R = ... [1]

© UCLES 2023

(b) The student pours 200 cm^3 of hot water into a beaker. He places a lid on the beaker. He places the thermometer in the hot water in the beaker.

He records, in Table 2.1, the temperature θ of the hot water at time t = 0. He immediately starts a stop-watch.

He continues recording the temperature in Table 2.1 at 30 s intervals until he has seven sets of readings.

(i) Complete the column headings in Table 2.1. [1]

(ii) Write the times in the first column of Table 2.1.

View solution

Table 2.1

t/	θ/
	92
	87
	83
	80
	78
	76
	75

[1]

(c) **(i)** Calculate the decrease in temperature $\Delta\theta$ between t = 0 and t = 180 s.

View solution

$\Delta\theta$ = ... [1]

(ii) Calculate the average rate of cooling R of the water using the equation $R = \frac{\Delta\theta}{\Delta t}$, where Δt = 180 s. Include the unit.

R = ... [2]

(d) A student states that the water cools slowly.

View solution

Suggest **two** changes to the experiment that the student makes to increase the rate of cooling of the hot water without changing the starting temperature of the hot water. Room temperature remains constant.

1 .....

.....

2 .....

.....

[2]

© UCLES 2023

(e) State **one** precaution that you would take to obtain accurate temperature readings.

View solution

Explain briefly the reason for this precaution.

statement .....

explanation .....

.....

..... [2]

(f) The student uses a measuring cylinder to measure 200 cm^3 of water. He takes the reading from the bottom of the meniscus.

Explain the reason for taking the reading at the bottom of the meniscus rather than at the top of the meniscus.

.....

..... [1]

[Total: 11]

View solution

3 A student investigates the refraction of light using a semicircular transparent block.

Fig. 3.1 shows her ray-trace sheet.

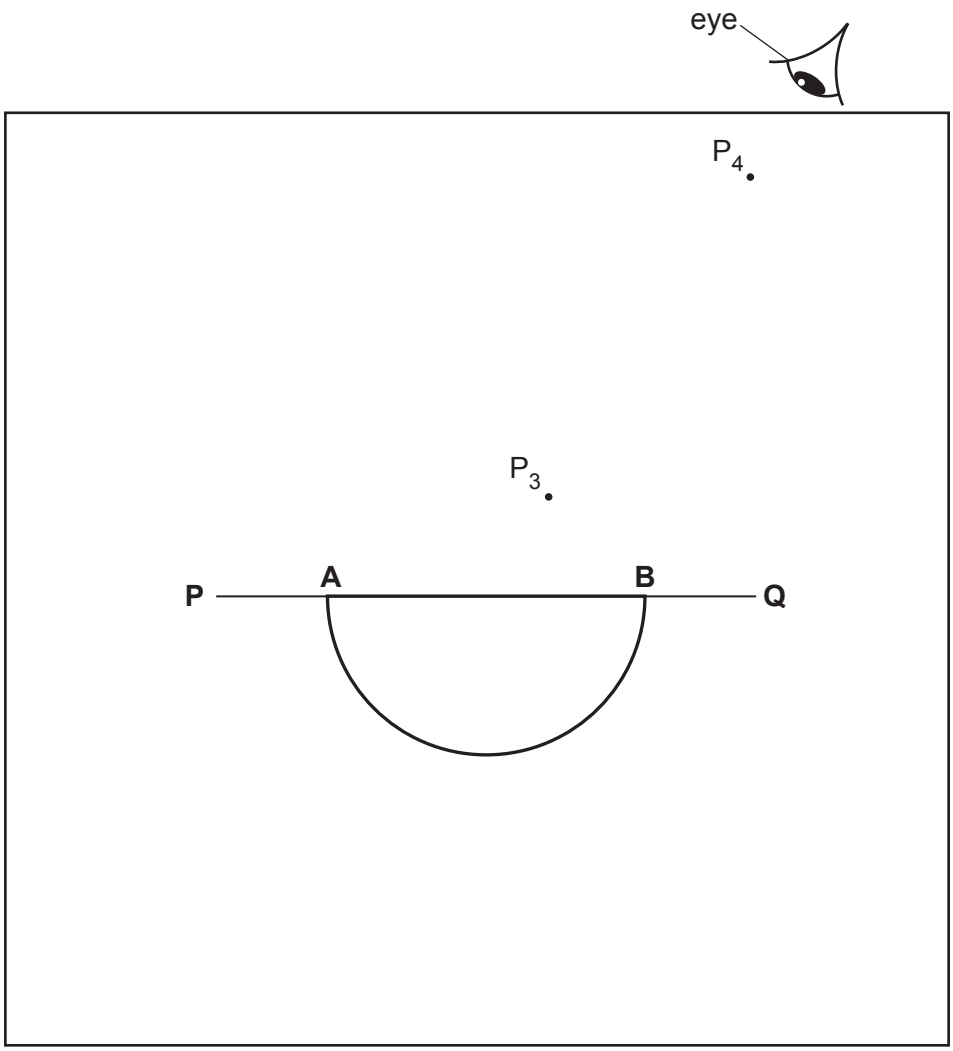

Fig. 3.1

View solution

(a) (i)
- Draw a normal **NL** through the centre of **AB**.
- Continue the normal so that it passes through the curved side of the block.
- Label the normal **NL**.
- Label the point **C** where the normal **NL** crosses **AB**.

[1]

(ii)
- Draw a line **DC**, below line **PC**, at an angle $i = 20°$ to the normal and to the left of the normal. [1]

(iii)
- Mark with neat crosses (X) the positions for two pins on line **DC** at a suitable distance apart for this type of ray-trace experiment.
- Label the positions P_1 and P_2.

[1]

(b) The student looks from the position of the eye shown in Fig. 3.1, to observe the images of P_1 and P_2 through side **AB** of the block.
She adjusts her line of sight until the images of P_1 and P_2 appear one behind the other.

She places two pins, P_3 and P_4, between her eye and the block so that P_3, P_4, and the images of P_1 and P_2 seen through the block, appear one behind the other.

View solution

The positions of P_3 and P_4 are shown in Fig. 3.1.

(i)
- Draw a line joining the positions of P_3 and P_4. Continue the line to **AB**.
- Label **E**, the end of the line furthest from **AB**.

[1]

(ii) Measure the acute angle θ between the line **NL** and the line **EC**. (An acute angle is less than 90°.)

θ = ... [2]

(c) State **one** precaution that the student takes to produce an accurate ray trace.

View solution

.....

..... [1]

(d) The student replaces the transparent block on the ray-trace sheet in the position shown in Fig. 3.2.

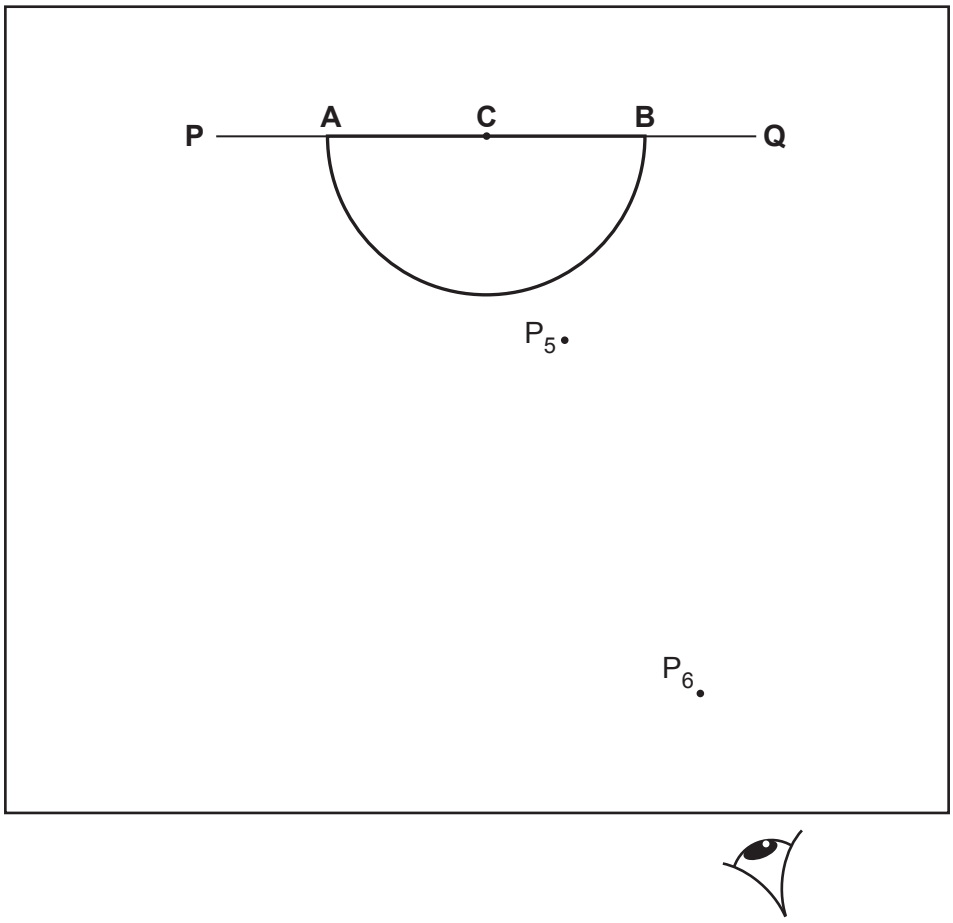

Fig. 3.2

© UCLES 2023

She replaces pins P_1 and P_2 on line **DC** in the same positions used in **(a)(iii)**.

She observes the images of P_1 and P_2 through the curved side of the block. She adjusts her line of sight until the images of P_1 and P_2 appear one behind the other.

She places two pins, P_5 and P_6, between her eye and the block so that P_5, P_6, and the images of P_1 and P_2 seen through the block, appear one behind the other.

The positions of P_5 and P_6 are shown on Fig. 3.2.

(i)
- Draw a line joining the positions of P_5 and P_6. Continue the line to **C**.
- Label **G**, the end of the line furthest from **AB**.

View solution

Measure the acute angle α between the line **AB** and the line **GC**. (An acute angle is less than 90°.)

α = ... [1]

(ii) Calculate the angle β between the line **GC** and the normal **NL**.

View solution

β = ... [1]

(e) A student suggests that angle β should be equal to the angle of incidence i = 20°.

View solution

State whether your result supports the suggestion and justify your answer.

statement .....

justification .....

.....

..... [2]

[Total: 11]

4 A student investigates the change in current in a conducting liquid as the distance between two electrodes is changed. The circuit is shown in Fig. 4.1.

View solution

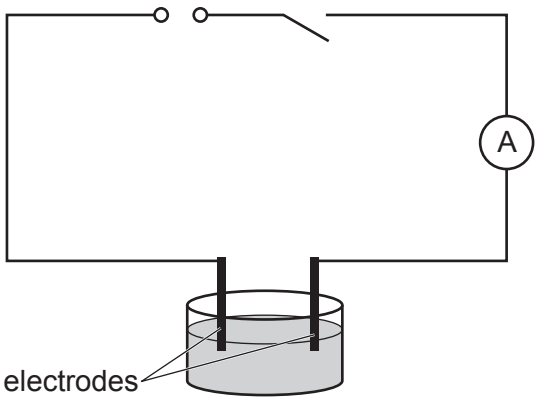

Fig. 4.1

Plan an experiment to investigate the change in current in the liquid as the distance between the electrodes is changed.

You should:

- explain briefly how to do the investigation
- state the key variables to keep constant
- draw a table, or tables, with column headings, to show how to display your readings (you are **not** required to enter any readings in the table)
- explain how to use your readings to reach a conclusion.

© UCLES 2023

.....

.....

.....

.....

.....

.....

.....

.....

.....

.....

.....

.....

.....

.....

.....

.....

.....

..... [7]

BLANK PAGE

Permission to reproduce items where third-party owned material protected by copyright is included has been sought and cleared where possible. Every reasonable effort has been made by the publisher (UCLES) to trace copyright holders, but if any items requiring clearance have unwittingly been included, the publisher will be pleased to make amends at the earliest possible opportunity.

To avoid the issue of disclosure of answer-related information to candidates, all copyright acknowledgements are reproduced online in the Cambridge Assessment International Education Copyright Acknowledgements Booklet. This is produced for each series of examinations and is freely available to download at www.cambridgeinternational.org after the live examination series.

Cambridge Assessment International Education is part of Cambridge Assessment. Cambridge Assessment is the brand name of the University of Cambridge Local Examinations Syndicate (UCLES), which is a department of the University of Cambridge.

© UCLES 2023