Cambridge Assessment International Education

Cambridge IGCSE™

CANDIDATE NAME									
CENTRE NUMBER						CANDIDATE NUMBER			

PHYSICS **0625/63**

Paper 6 Alternative to Practical **May/June 2023**

1 hour

You must answer on the question paper.

No additional materials are needed.

INSTRUCTIONS

- Answer **all** questions.
- Use a black or dark blue pen. You may use an HB pencil for any diagrams or graphs.
- Write your name, centre number and candidate number in the boxes at the top of the page.
- Write your answer to each question in the space provided.
- Do **not** use an erasable pen or correction fluid.
- Do **not** write on any bar codes.
- You may use a calculator.
- You should show all your working and use appropriate units.

INFORMATION

- The total mark for this paper is 40.
- The number of marks for each question or part question is shown in brackets [ ].

This document has **16** pages. Any blank pages are indicated.

© UCLES 2023

BLANK PAGE

© UCLES 2023

1 A student determines the mass M_R of a metre ruler by a balancing method.

He uses the apparatus shown in Fig. 1.1.

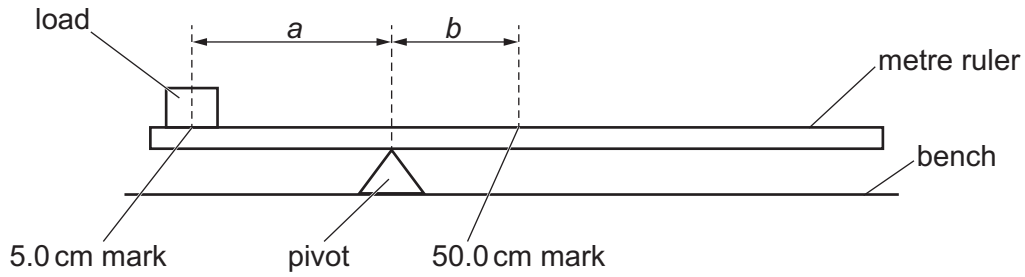

Fig. 1.1

(a) The student places a circular load of mass M = 20 g on the metre ruler but in a position different from that shown in Fig. 1.1.

View solution

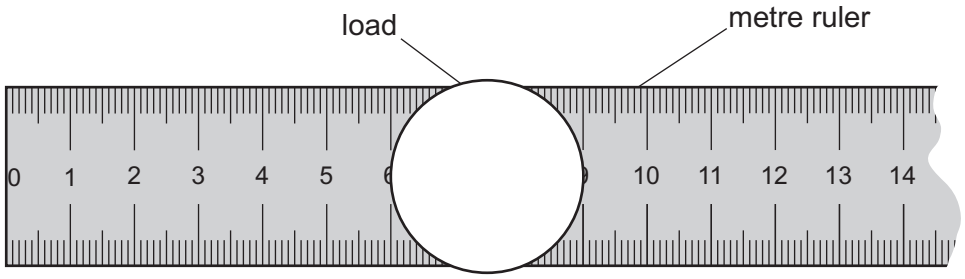

Fig. 1.2 (not to scale)

Determine the distance d_0 of the centre of the load from the zero end of the ruler, as shown in Fig. 1.2. Fig. 1.2 is **not** to scale.

d_0 = ... cm [1]

© UCLES 2023

(b) (i) The student places the metre ruler on the pivot and changes the position of the load so that the centre of the load is at the 5.0 cm mark.

He adjusts the position of the metre ruler on the pivot until the metre ruler is as near as possible to being balanced.

Describe a technique for ensuring that the ruler is as near as possible to being balanced.

.....

.....

..... [1]

(ii) The student determines the scale reading p on the ruler at the position of the pivot.
He calculates the distance a between the 5.0 cm mark and the pivot and the distance b between the 50.0 cm mark and the pivot, using the equations

View solution

$$a = p - 5.0$$

$$b = 50.0 - p.$$

He repeats the procedure for values of M = 40 g, 60 g, 80 g and 100 g.
His results are shown in Table 1.1.

Table 1.1

M / g	a / cm	b / cm	$\frac{b}{a}$
20	39.5	5.5	
40	35.7	9.3	0.26
60	32.6	12.4	0.38
80	29.0	16.0	0.55
100	27.0	18.0	0.67

For the value of M = 20 g, calculate and record in Table 1.1 the value of $\frac{b}{a}$. [1]

© UCLES 2023

(c) Plot a graph of M/g (y-axis) against $\frac{b}{a}$ (x-axis).

View solution

Draw the best-fit line.

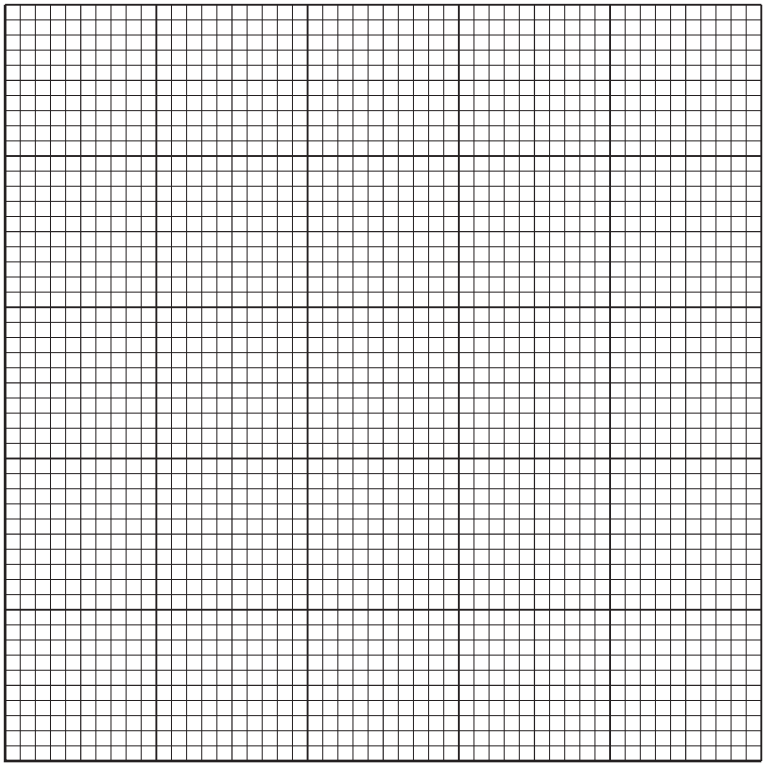

[4]

(d) **(i)** Determine the gradient G of the graph. Show clearly on the graph how you obtained the necessary information.

View solution

G = ... [1]

(ii) The mass M_R of the metre ruler is numerically equal to G.

View solution

Write down the value of M_R in this experiment. Include the unit.

M_R = ... [1]

© UCLES 2023

(e) (i) The determination of M_R by this method assumes that the centre of mass of the metre ruler is at the 50.0 cm mark.

Suggest how you could use apparatus from Fig. 1.1 to test whether the centre of mass of the metre ruler is at the 50.0 cm mark. You may draw a diagram.

View solution

.....

.....

..... [1]

(ii) A student finds that the centre of mass of her metre ruler is at the 48.7 cm mark.

View solution

Suggest how she changes the procedure in **(b)(ii)** to allow for this.

.....

.....

..... [1]

[Total: 11]

© UCLES 2023

2 A student investigates a circuit containing different combinations of resistors.

She uses **circuit A**, shown in Fig. 2.1.
Circuit A is not yet complete.

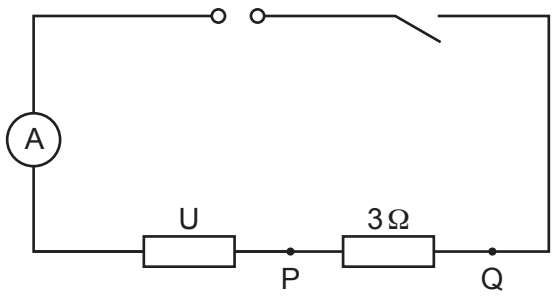

Fig. 2.1

View solution

(a) On Fig. 2.1, complete the circuit to show a voltmeter connected to measure the potential difference (p.d.) across resistor U. [1]

(b) Circuit A

The student measures the potential difference (p.d.) V across resistor U and the current I in the circuit.

View solution

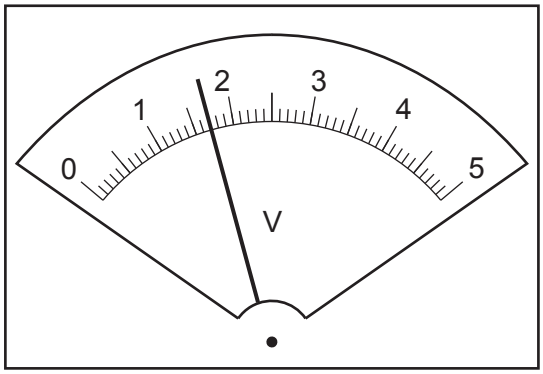

Fig. 2.2

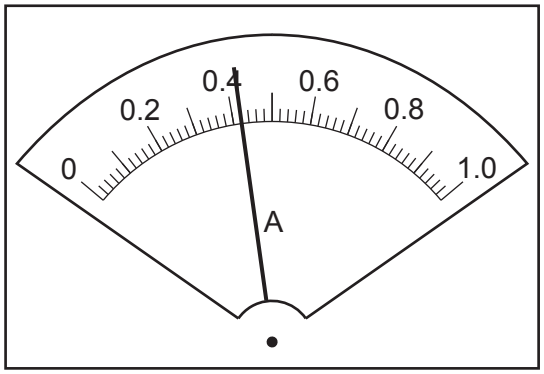

Fig. 2.3

Read, and record in Table 2.1, the values of V and I shown on the meters in Fig. 2.2 and Fig. 2.3.

Table 2.1

circuit	V/V	I/A	R/Ω
A			
B	2.1	0.54	
C	2.4	0.63	

[2]

© UCLES 2023

(c) Circuit B

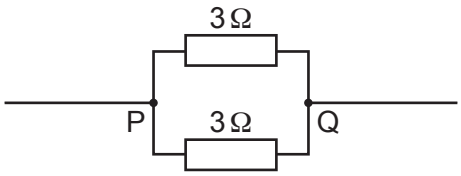

Fig. 2.4

Circuit C

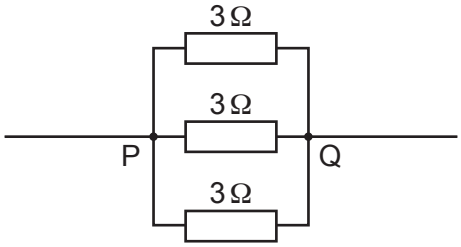

Fig. 2.5

The student connects two 3 Ω resistors in parallel between P and Q as shown in Fig. 2.4 to form **circuit B**.

The student connects three 3 Ω resistors in parallel as shown in Fig. 2.5 to form **circuit C**.

For each circuit, she measures the potential difference (p.d.) V across resistor U and the current I in the circuit. Her readings are shown in Table 2.1.

(i) Calculate, and record in Table 2.1, the resistance R of resistor U for each combination of resistors.

Use the readings from Table 2.1 and the equation $R = \frac{V}{I}$.

[2]

(ii) A student suggests that the values of R should be the same.

State whether your results support this suggestion. Justify your statement by reference to values from your results.

statement .....

justification .....

.....

.....

[2]

(d) A student determines the resistance of resistor U using a variable resistor to control the current in the circuit.

View solution

(i) Complete the circuit in Fig. 2.6 to show a variable resistor used for this purpose.

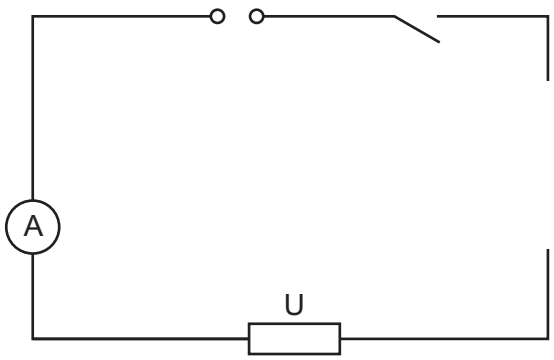

Fig. 2.6

[2]

(ii) Briefly explain **one** advantage of using a variable resistor to determine the resistance of resistor U rather than the procedure carried out in **(b)** and **(c)**.

.....

.....

.....

..... [1]

(e) A student suggests that potential difference and current for resistor U are proportional.

State how a graph of potential difference against current for resistor U can confirm this suggestion.

.....

.....

.....

..... [1]

[Total: 11]

View solution

3 A student investigates the reflection of light by two plane mirrors.

The student's ray-trace sheet is shown full-size in Fig. 3.1.

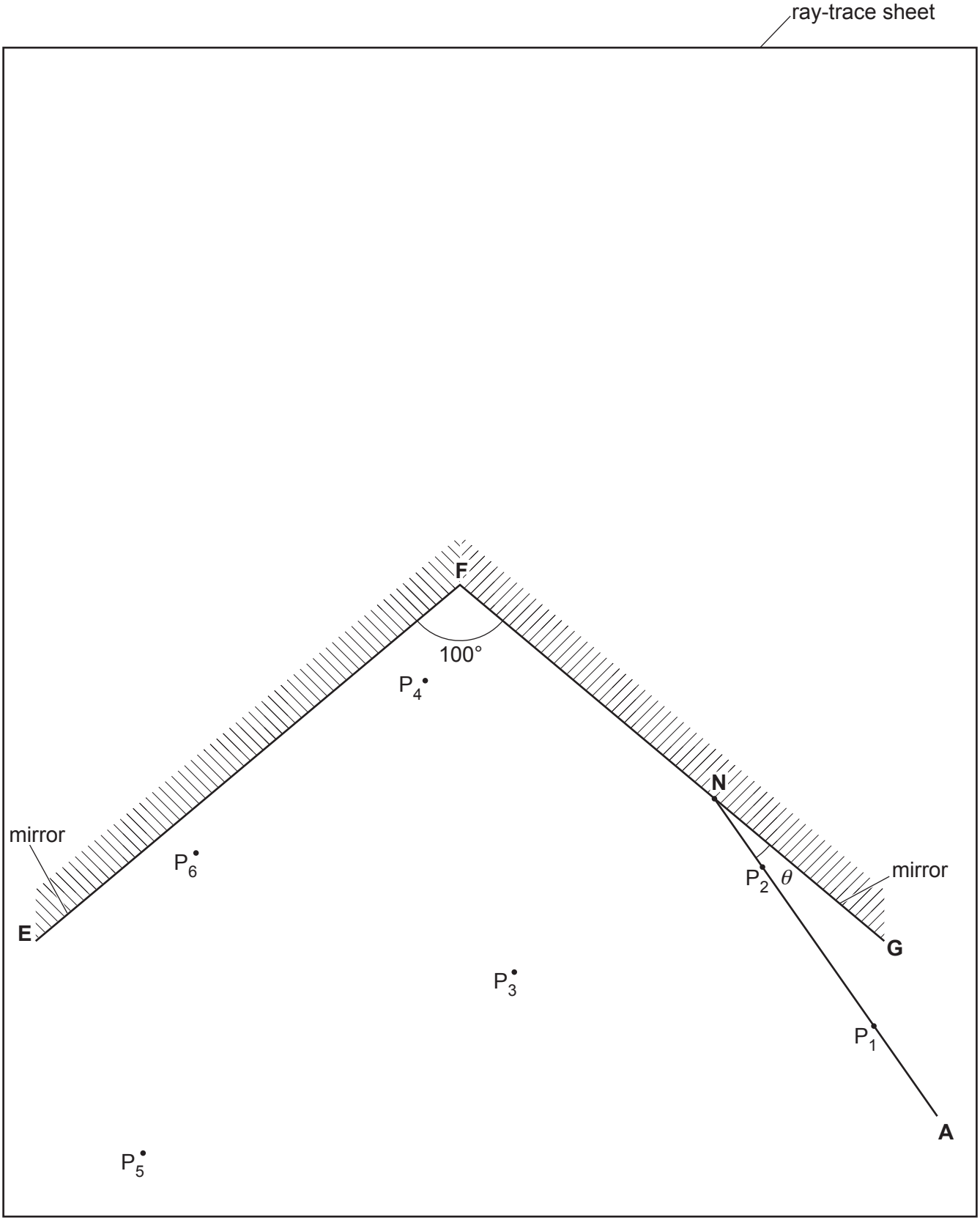

Fig. 3.1

View solution

(a) The student places two mirrors, **FE** and **FG**, at an angle of 100° to each other, as shown in Fig. 3.1.

(i) On Fig. 3.1, draw a normal to **FG** at point **N**. Extend the normal below **FG**. Label the lower end of the normal with the letter **L**. [1]

(ii) The student draws line **AN**, as shown in Fig. 3.1.

View solution

On Fig. 3.1, measure the acute angle θ_1 between the lines **AN** and **GN**. (An acute angle is less than 90°.)

θ_1 = ...° [1]

(b) The student places two pins, P_1 and P_2, on line **AN**, as shown in Fig. 3.1.

View solution

(i) Measure the distance *d* between pins P_1 and P_2.

d = ... cm [1]

(ii) Suggest whether the two pins are a suitable distance apart for accurate ray tracing. Explain your answer.

View solution

statement .....

explanation .....

.....

[1]

(c) The student views the images of P_1 and P_2 in mirror **FE**.
She places two pins, P_3 and P_4, so that pins P_3, P_4 and the images of P_1 and P_2 all appear one behind the other.

View solution

- Draw a line through P_3 and P_4. Extend the line 10 cm above **FE**.
- Label the upper end of this line with the letter **R**.
- Label the lower end of the line with the letter **B**.

[1]

(d) The student repeats the procedure for an angle θ_2 = 40°.
She places two pins, P_5 and P_6, so that pins P_5, P_6 and the images of P_1 and P_2 all appear one behind the other.

View solution

- Draw a line through pins P_5 and P_6. Extend the line until it crosses **BR**.
- Label the upper end of this line with the letter **T**.
- Label the lower end of the line with the letter **C**.

(i) Measure the acute angle α between lines **BR** and **CT**. (An acute angle is less than 90°.)

α = ...° [1]

© UCLES 2023

(ii) A student thinks that there is a relationship between angle α and the values of angle θ_1 from **(a)(ii)** and angle θ_2 from **(d)**.

State what your results suggest that relationship could be. Justify your answer by reference to values from your results.

statement .....

justification .....

.....

[2]

(e) Suggest **two** precautions to take in this type of experiment to ensure accurate results.

View solution

1 .....

.....

2 .....

.....

[2]

(f) Suggest **one** reason why different students, all doing this experiment carefully, may **not** obtain identical results.

.....

.....

..... [1]

[Total: 11]

View solution

© UCLES 2023

Question 4 is on page 14.

4 A student investigates the rate of cooling of hot water in a container which has a lid.

Plan an experiment which will enable him to compare the effect of lids of different thicknesses on the rate of cooling.

View solution

The apparatus available includes:

- a beaker
- a supply of hot water
- insulating material from which lids can be cut.

In your plan, you should:

- list any additional apparatus needed
- explain briefly how to do the experiment, including the measurements to take so that the rate of cooling can be determined
- state the key variables to keep constant
- draw a table, or tables, with column headings, to show how to display the readings (you are **not** required to enter any readings in the table)
- explain how to use the readings to reach a conclusion.

You may draw a diagram if it helps to explain your plan.

.....

.....

.....

.....

.....

.....

.....

.....

.....

.....

.....

.....

© UCLES 2023

.....

.....

.....

.....

.....

.....

.....

.....

.....

.....

..... [7]

BLANK PAGE

Permission to reproduce items where third-party owned material protected by copyright is included has been sought and cleared where possible. Every reasonable effort has been made by the publisher (UCLES) to trace copyright holders, but if any items requiring clearance have unwittingly been included, the publisher will be pleased to make amends at the earliest possible opportunity.

To avoid the issue of disclosure of answer-related information to candidates, all copyright acknowledgements are reproduced online in the Cambridge Assessment International Education Copyright Acknowledgements Booklet. This is produced for each series of examinations and is freely available to download at www.cambridgeinternational.org after the live examination series.

Cambridge Assessment International Education is part of Cambridge Assessment. Cambridge Assessment is the brand name of the University of Cambridge Local Examinations Syndicate (UCLES), which is a department of the University of Cambridge.

© UCLES 2023