Cambridge Assessment International Education

Cambridge IGCSE™

CANDIDATE NAME									
CENTRE NUMBER						CANDIDATE NUMBER				

PHYSICS **0625/31**

Paper 3 Theory (Core) **May/June 2024**

1 hour 15 minutes

You must answer on the question paper.

No additional materials are needed.

INSTRUCTIONS

- Answer **all** questions.
- Use a black or dark blue pen. You may use an HB pencil for any diagrams or graphs.
- Write your name, centre number and candidate number in the boxes at the top of the page.
- Write your answer to each question in the space provided.
- Do **not** use an erasable pen or correction fluid.
- Do **not** write on any bar codes.
- You may use a calculator.
- You should show all your working and use appropriate units.
- Take the weight of 1.0 kg to be 9.8 N (acceleration of free fall = 9.8 m / s^2).

INFORMATION

- The total mark for this paper is 80.
- The number of marks for each question or part question is shown in brackets [ ].

This document has **16** pages. Any blank pages are indicated.

© UCLES 2024

1 Fig. 1.1 shows the speed–time graph for a car.

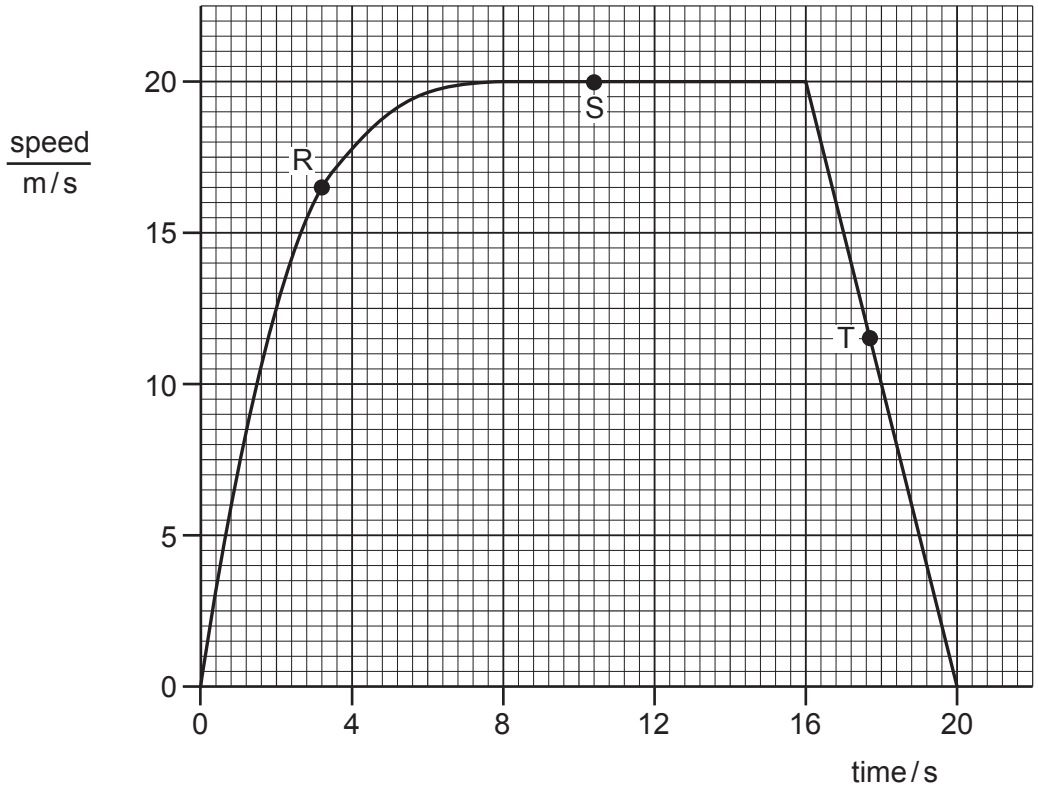

Fig. 1.1

(a) **(i)** For the graph in Fig. 1.1, match each letter, R, S and T, with the motion at that point.

View solution

Draw **one** line from each letter to the correct description. One has been done for you.

letter on the graph	**description of motion**
R	at rest
S	moving with constant speed
T	decelerating (negative acceleration)
	accelerating (positive acceleration)

[2]

(ii) Determine the speed of the car at time = 4.0 s.

speed = ... m / s [1]

View solution

(iii) Determine the distance moved by the car from time = 16.0 s to time = 20.0 s.

View solution

distance moved = ... m [3]

(b) Define the term velocity.

..... [1]

[Total: 7]

View solution

2 A student places six 100 g masses in a stack, as shown in Fig. 2.1.

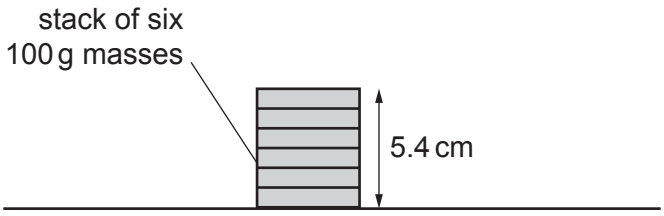

Fig. 2.1 (not to scale)

View solution

(a) The height of the stack of masses is 5.4 cm.

Calculate the average thickness of **one** mass.

average thickness of **one** mass = ... cm [2]

View solution

(b) Fig. 2.2 shows the masses, a measuring cylinder and a beaker containing some water.

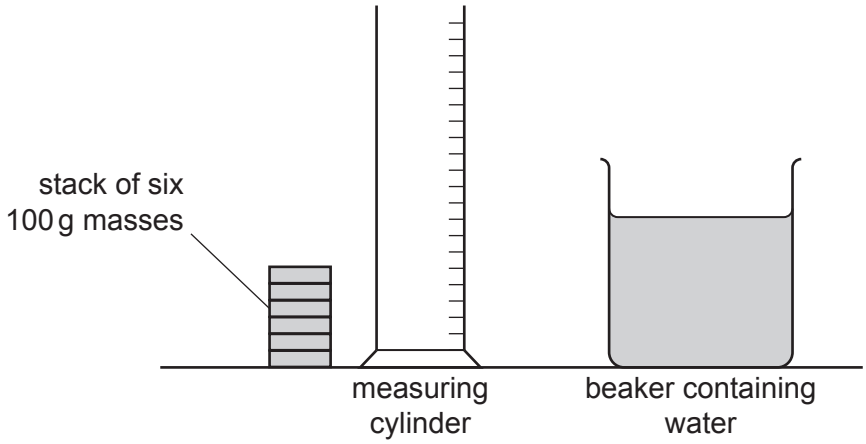

Fig. 2.2

The student uses the equipment in Fig. 2.2 to determine the total volume of the six masses.

Describe a method that the student uses.

.....

.....

.....

.....

..... [3]

[Total: 5]

© UCLES 2024

3 Fig. 3.1 shows the horizontal forces acting on a boat.

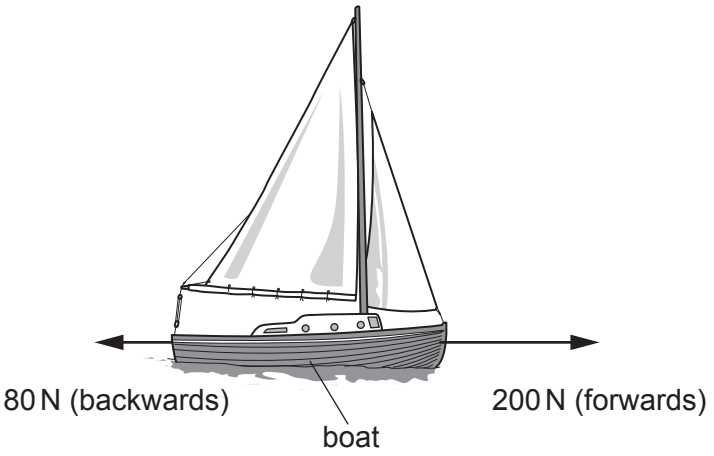

Fig. 3.1

(a) (i) Calculate the resultant horizontal force on the boat in Fig. 3.1.

View solution

size of resultant force = ... N

direction of resultant force .....

[2]

(ii) Suggest what causes the 80 N force on the boat in Fig. 3.1.

View solution

.....

..... [1]

(iii) Another boat is travelling and the horizontal forces on this boat are balanced.

View solution

Describe the horizontal motion of this boat.

..... [1]

© UCLES 2024

(b) Fig. 3.2 shows the wheel used to steer a boat.

View solution

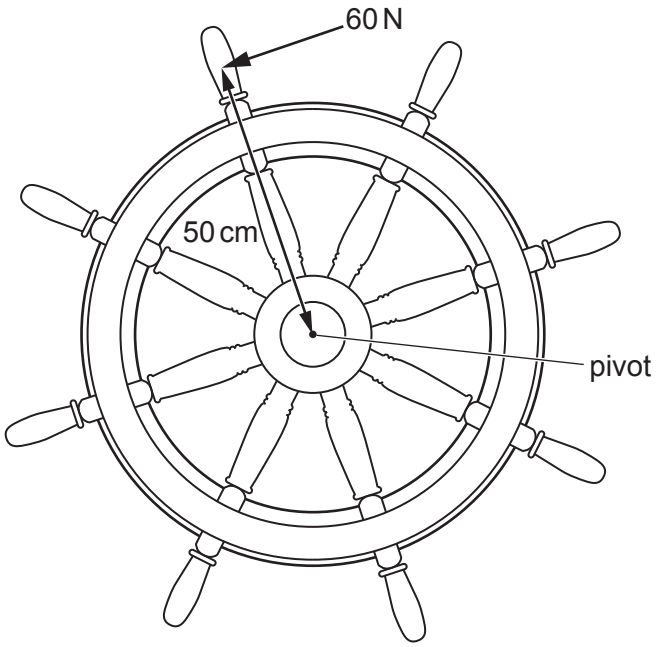

Fig. 3.2

A force of 60 N acts at a perpendicular distance of 50 cm from the wheel's pivot.

Calculate the moment of the 60 N force about the pivot. Include the unit.

moment = ...

unit .....

[4]

[Total: 8]

© UCLES 2024

4 The government of a country decides to reduce the amount of fossil fuel burned for generating electrical power.

(a) State **two** reasons, apart from cost, for reducing the amount of fossil fuel burned.

View solution

1 .....

.....

2 .....

.....

[2]

(b) **(i)** Describe how a hydroelectric power station generates electrical power.

View solution

.....

.....

.....

.....

..... [3]

(ii) Hydroelectric power stations are expensive to build.

View solution

State **two** other disadvantages of using a hydroelectric power station to generate electrical power.

1 .....

.....

2 .....

.....

[2]

(c) The government plans to build some wind turbines. The government plans to store some of the electrical energy generated by the wind turbines.

Suggest **one** method of storing the electrical energy generated by a wind turbine.

View solution

.....

..... [1]

[Total: 8]

5 **(a)** Describe the arrangement, separation and motion of gas particles.

View solution

.....

.....

.....

.....

..... [3]

(b) Fig. 5.1 shows some gas in a container with a piston. The piston can move into the container.

View solution

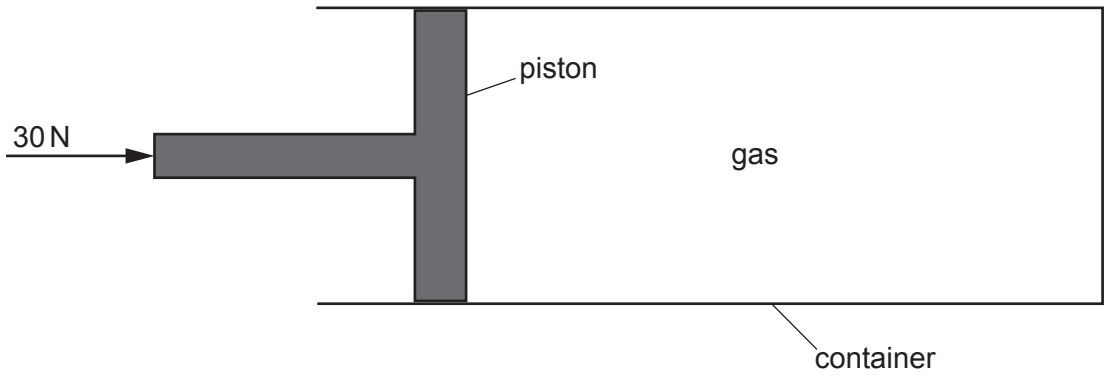

Fig. 5.1

(i) A force of 30 N pushes the piston into the container for a distance of 0.18 m.

Calculate the work done by the 30 N force.

work done = ... J [3]

(ii) When the piston moves into the container, the temperature of the gas does **not** change.

Describe and explain any change in the pressure on the walls of the container.

View solution

.....

.....

..... [2]

[Total: 8]

6 A student wants to compare the conduction of thermal energy through rods made of iron, copper, glass and aluminium. Each rod is coated with wax.

Fig. 6.1 shows the equipment that the student uses.

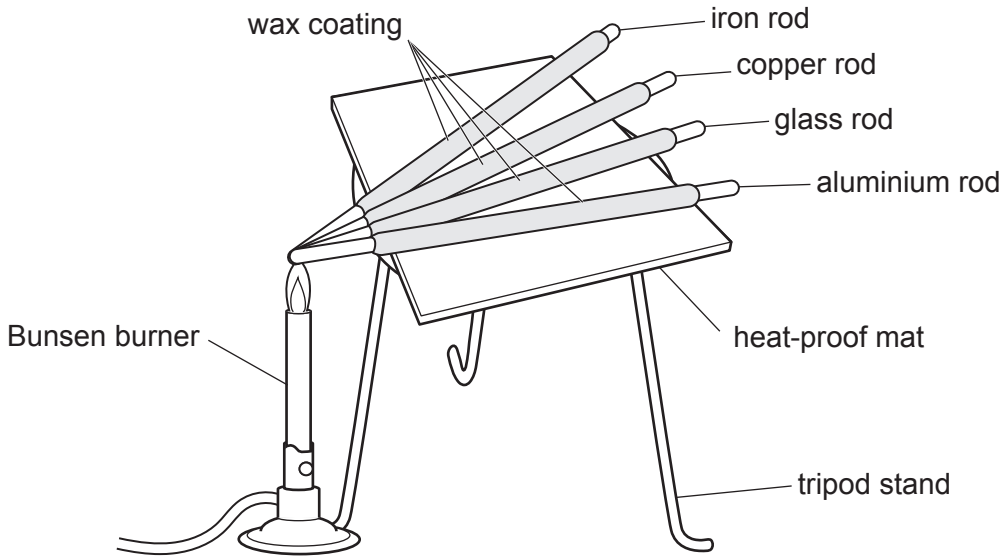

Fig. 6.1

View solution

(a) Describe how the student can compare the conduction of thermal energy through the rods in Fig. 6.1.

.....

.....

..... [2]

(b) The Bunsen burner emits infrared waves.

View solution

The infrared waves have a wavelength of 2.0×10^{-6} m.
The velocity of the infrared waves is 3.0×10^{8} m/s.

(i) Calculate the frequency of the infrared waves.

frequency = ... Hz [3]

(ii) State the name of a region of the electromagnetic spectrum which has a wavelength longer than the wavelength of infrared. Give **one** use of the radiation in this region.

region .....

use .....
[2]

[Total: 7]

© UCLES 2024

7 **(a)** Fig. 7.1 shows a ray of light striking a plane mirror. The ray is reflected as shown.

View solution

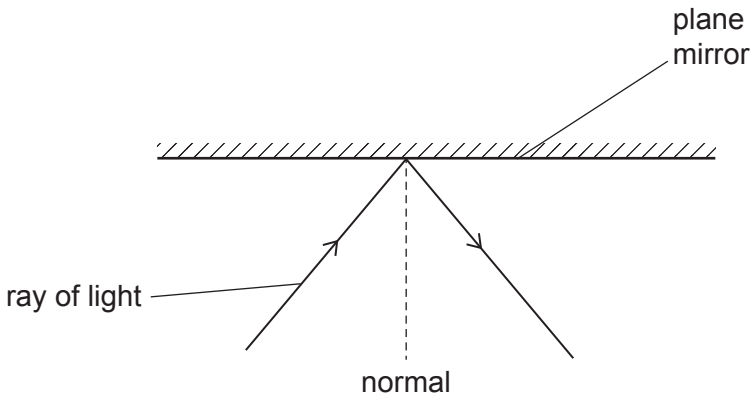

Fig. 7.1

The angle of incidence for the ray of light is 40°.

(i) Indicate the angle of reflection by drawing a letter R on Fig. 7.1. [1]

(ii) State the size of the angle of reflection in Fig. 7.1.

View solution

angle of reflection = ...° [1]

(b) An object O is placed to the left of a thin converging lens. F_1 is the principal focus on one side of the lens and F_2 is the principal focus on the other side of the lens.

Two rays from the top of the object are incident on the lens, as shown in Fig. 7.2.

View solution

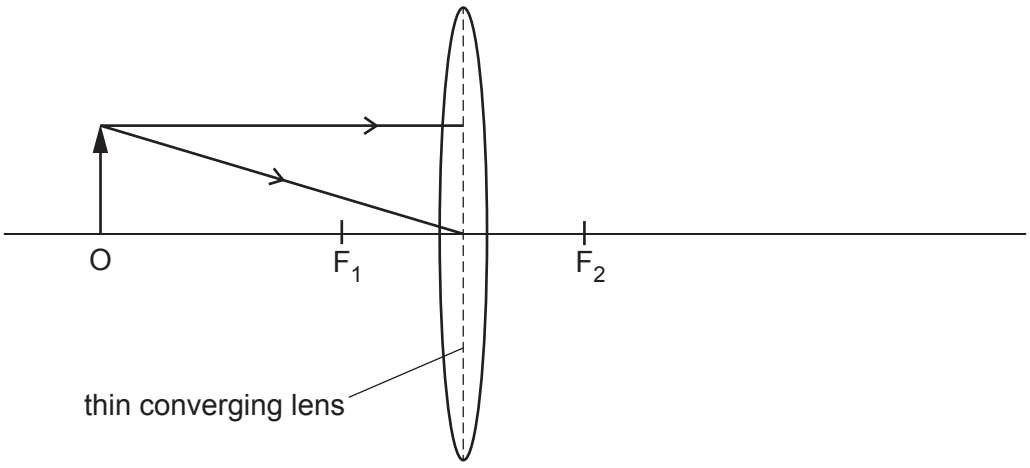

Fig. 7.2

(i) On Fig. 7.2, locate the image of O by continuing the path of each ray. [2]

(ii) Draw an arrow to represent the image of O. [1]

View solution

(c) Fig. 7.3 shows a prism producing a spectrum of colours from a narrow beam of white light.

View solution

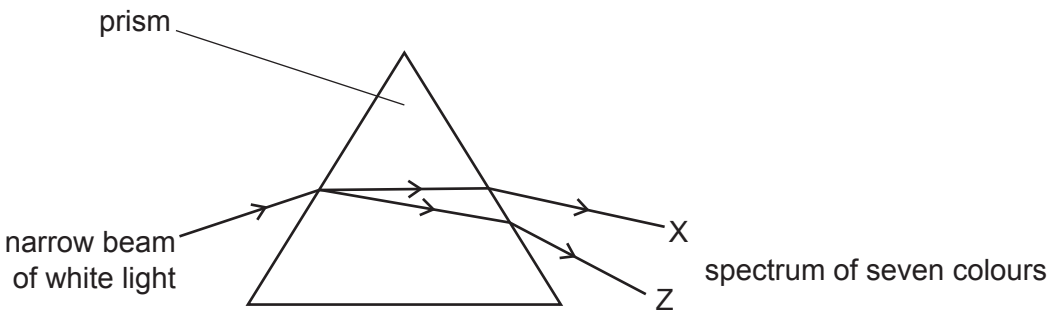

Fig. 7.3

(i) The prism refracts the white light.

State the name of the effect that produces a spectrum.

..... [1]

(ii) In the spectrum shown in Fig. 7.3, there are seven colours.

View solution

List the seven colours in the order they appear between X and Z.

X .....

.....

.....

.....

.....

.....

Z .....

[2]

[Total: 8]

8 Fig. 8.1 shows an arrangement for making an electromagnet. The electromagnet consists of a solenoid and a core.

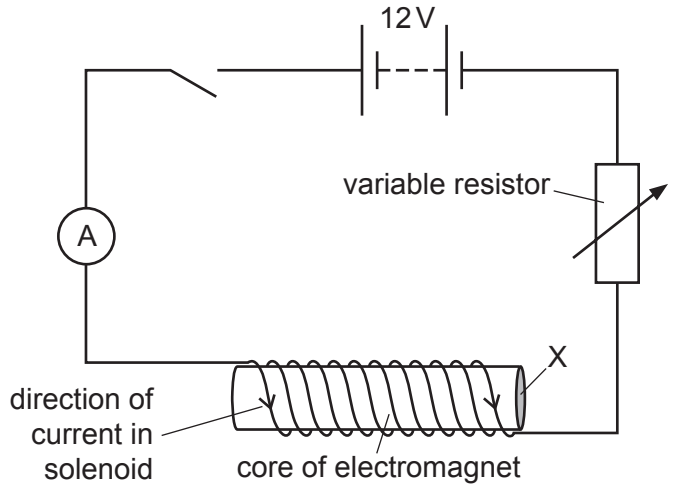

Fig. 8.1

(a) (i) The electromagnet is a temporary magnet.

State **one** material which is suitable for the core of the electromagnet.

..... [1]

(ii) The battery is made from cells connected in series. Each cell in the battery has an electromotive force (e.m.f.) of 1.5 V.

Calculate the number of cells in the battery in Fig. 8.1.

number of cells = ... [2]

(b) The switch is closed. The direction of the current in the solenoid is shown in Fig. 8.1.

(i) There is a magnetic field around the electromagnet.

State the name of a piece of equipment that can show the direction of a magnetic field.

..... [1]

(ii) State the name of the pole labelled X on the core of the electromagnet.

..... [1]

(c) The resistance of the solenoid is 8.0 Ω.
The current in the solenoid is 1.2 A.

Calculate the potential difference (p.d.) across the solenoid.

p.d. = ... V [3]

[Total: 8]

9 **(a)** Fig. 9.1 shows the power cable for connecting a desktop computer to the mains electricity circuit.

View solution

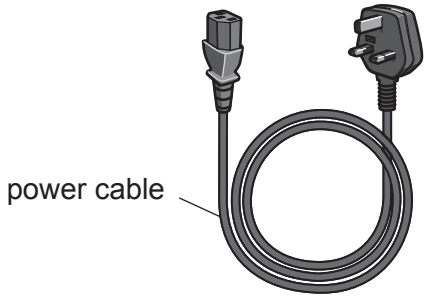

Fig. 9.1

(i) State the name of each of the **three** wires inside the power cable.

1 .....

2 .....

3 .....

[2]

(ii) The cable is designed for a maximum current of 13A.

View solution

Suggest **one** hazard due to a current of 30A in the cable.

..... [1]

(b) There is a transformer in the desktop computer.
The input voltage to the primary coil V_p is 230V (a.c.).
The number of turns on the primary coil N_p is 720.
The number of turns on the secondary coil N_s is 50.

View solution

(i) Calculate the output voltage V_s of the secondary coil.

secondary coil output voltage V_s = ... V [3]

(ii) The current in the input coil of the transformer is 1.4A.

View solution

Calculate the input power to the desktop computer.

input power = ... W [3]

[Total: 9]

© UCLES 2024

10 A nucleus of strontium-90 is represented using nuclide notation as shown.

$$^{90}_{38}\mathrm{Sr}$$

(a) **(i)** Calculate the number of neutrons in one nucleus of strontium-90.

View solution

number of neutrons = ... [2]

(ii) Determine the number of electrons in one atom of strontium-90.

View solution

number of electrons = ... [1]

(b) Strontium-90 decays by emitting β-particles (beta-particles).

View solution

Describe the nature of β-particles.

..... [1]

(c) Strontium-90 decays with a half-life of 29 years.
A sample contains 16 mg of strontium-90.

View solution

Calculate the time taken for the strontium-90 to decay until only 2.0 mg of strontium-90 remains in the sample.

time = ... years [2]

[Total: 6]

© UCLES 2024

11 **(a)** The Sun is the star in our Solar System. Eight planets orbit the Sun.

View solution

State the names of **two** other categories of bodies in the Solar System.

1 .....

2 .....

[2]

(b) State the name of the galaxy that includes our Solar System.

View solution

..... [1]

(c) Describe how the light from distant galaxies gives evidence to support the Big Bang Theory.

.....

.....

.....

.....

..... [3]

[Total: 6]

View solution

BLANK PAGE

Permission to reproduce items where third-party owned material protected by copyright is included has been sought and cleared where possible. Every reasonable effort has been made by the publisher (UCLES) to trace copyright holders, but if any items requiring clearance have unwittingly been included, the publisher will be pleased to make amends at the earliest possible opportunity.

To avoid the issue of disclosure of answer-related information to candidates, all copyright acknowledgements are reproduced online in the Cambridge Assessment International Education Copyright Acknowledgements Booklet. This is produced for each series of examinations and is freely available to download at www.cambridgeinternational.org after the live examination series.

Cambridge Assessment International Education is part of Cambridge Assessment. Cambridge Assessment is the brand name of the University of Cambridge Local Examinations Syndicate (UCLES), which is a department of the University of Cambridge.

© UCLES 2024