Cambridge Assessment International Education

Cambridge IGCSE™

CANDIDATE NAME									
CENTRE NUMBER						CANDIDATE NUMBER				

PHYSICS **0625/32**

Paper 3 Theory (Core) **May/June 2024**

1 hour 15 minutes

You must answer on the question paper.

No additional materials are needed.

INSTRUCTIONS
- Answer **all** questions.
- Use a black or dark blue pen. You may use an HB pencil for any diagrams or graphs.
- Write your name, centre number and candidate number in the boxes at the top of the page.
- Write your answer to each question in the space provided.
- Do **not** use an erasable pen or correction fluid.
- Do **not** write on any bar codes.
- You may use a calculator.
- You should show all your working and use appropriate units.
- Take the weight of 1.0 kg to be 9.8 N (acceleration of free fall = 9.8 m / s^2).

INFORMATION
- The total mark for this paper is 80.
- The number of marks for each question or part question is shown in brackets [ ].

This document has **16** pages. Any blank pages are indicated.

© UCLES 2024

1 Fig. 1.1 shows the speed–time graph for a car travelling along a flat straight road.

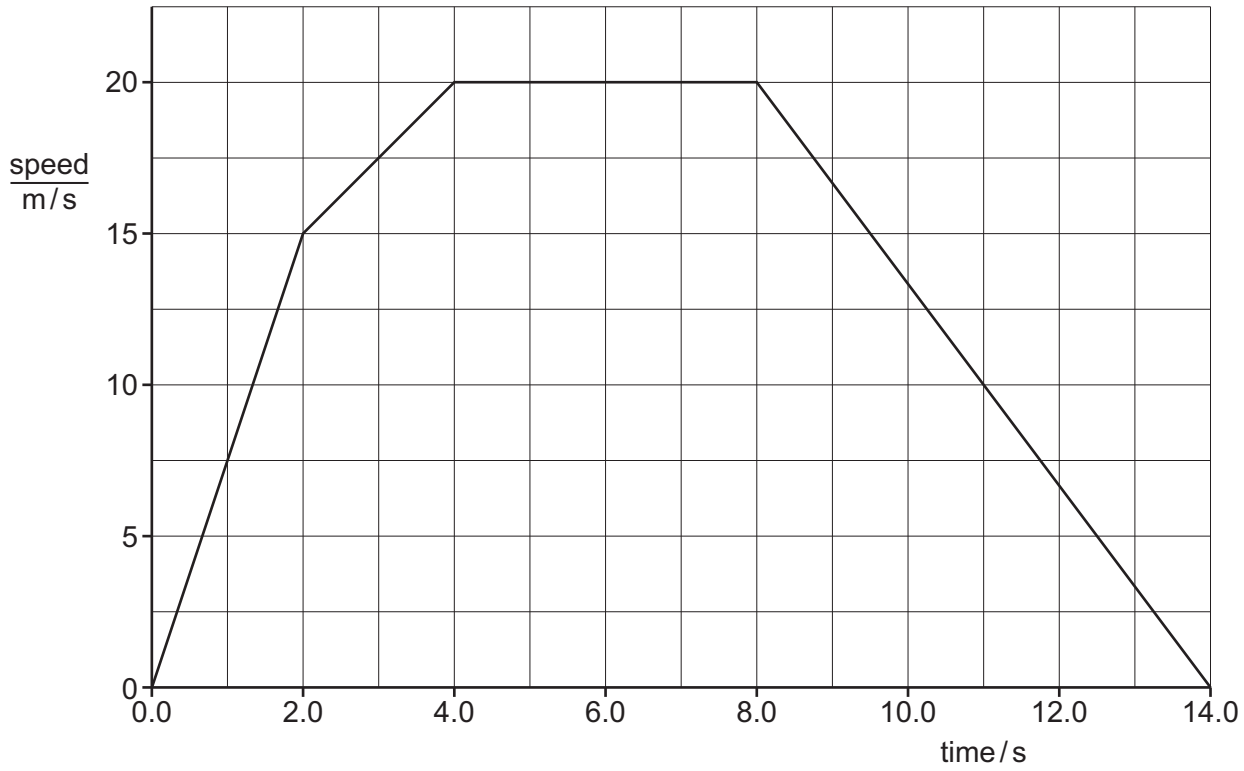

Fig. 1.1

(a) Describe the motion of the car between time = 0 and time = 2.0 s.

View solution

..... [1]

(b) State the value of the acceleration of the car between time = 4.0 s and time = 8.0 s.

View solution

..... [1]

(c) Calculate the distance travelled by the car between time = 8.0 s and time = 14.0 s.

View solution

distance travelled = ... m [3]

[Total: 5]

2 A student wants to find the volume of a piece of metal. The student can use any of the items of equipment shown in Fig. 2.1.

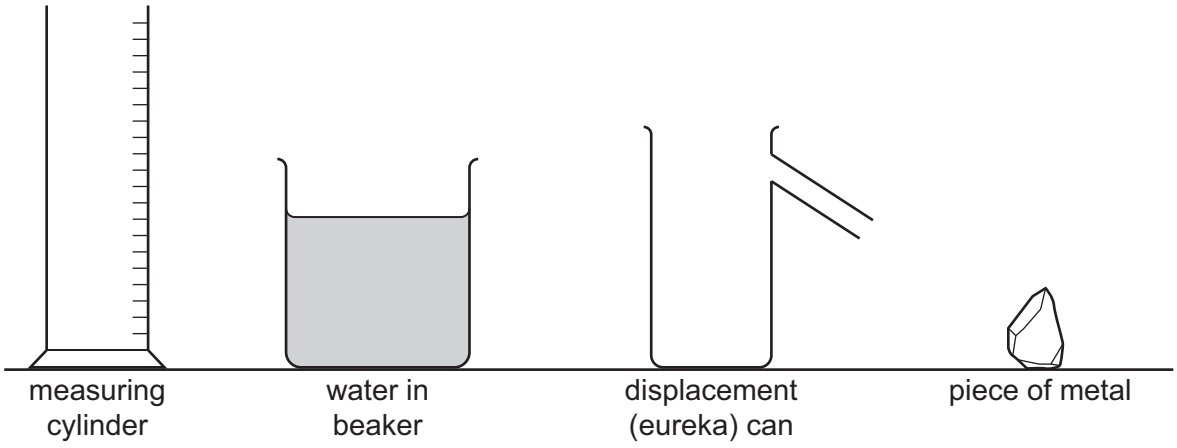

Fig. 2.1

View solution

(a) Describe how the student can find the volume of the piece of metal by using equipment from Fig. 2.1.

.....

.....

.....

.....

.....

..... [4]

(b) The volume of a different piece of metal is 30 cm^3. The mass of this piece of metal is 192 g.

Calculate the density of the metal. Include the unit.

View solution

density of the metal = ...

unit .....

[4]

[Total: 8]

© UCLES 2024

3 Fig. 3.1 shows two solid shapes, a cylinder and a cone, which are made from the same material.

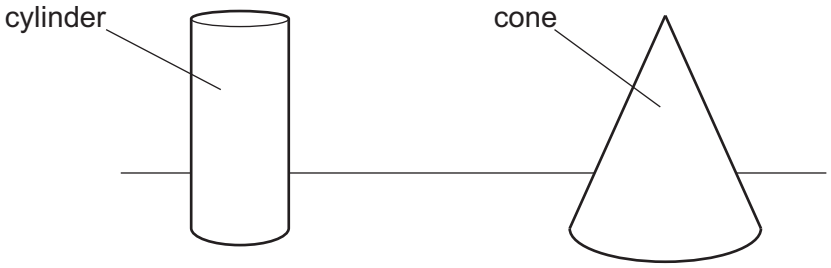

Fig. 3.1

(a) State and explain which shape is the more stable.

View solution

the more stable shape is .....

explanation .....

.....

[1]

(b) The mass of the cylinder is 0.25 kg.

View solution

Calculate the weight of the cylinder.

weight = ... N [2]

(c) A horizontal force of 3.0 N tilts the cone. The cone balances on one edge, as shown in Fig. 3.2.

View solution

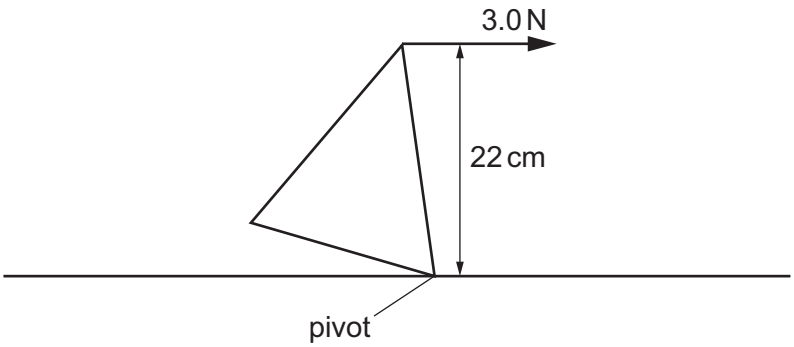

Fig. 3.2

(i) Calculate the moment of the 3.0 N force about the pivot in Fig. 3.2.

moment = ... N cm [3]

© UCLES 2024

(ii) Determine the moment of the weight of the cone about the pivot.
Use ideas about the principle of moments.

View solution

moment of weight about pivot = ... N cm [1]

[Total: 7]

© UCLES 2024

4 Fig. 4.1 shows a flow diagram for the energy transferred in a television.

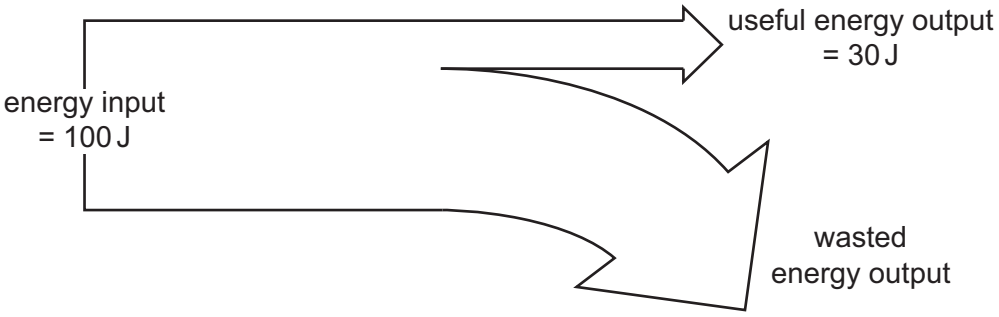

Fig. 4.1

(a) (i) State **two** ways in which **useful** energy is transferred from the television.

View solution

1 .....

2 .....

[2]

(ii) Determine the value of the wasted energy output from the television.

View solution

wasted energy = ... J [1]

(b) Fig. 4.2 represents a hydroelectric power station.

View solution

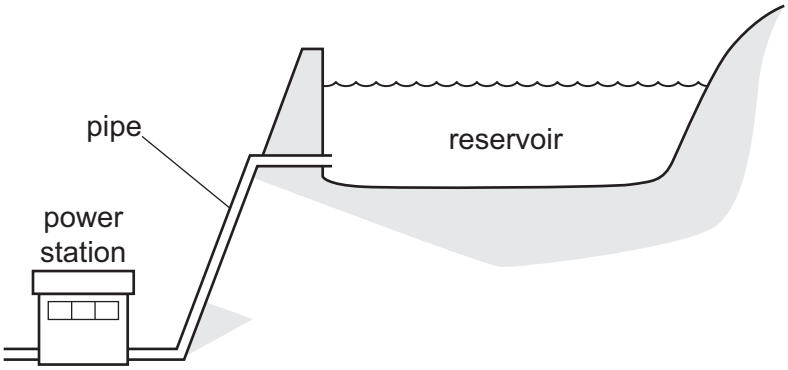

Fig. 4.2

(i) Describe how a hydroelectric power station generates electrical power.

.....

.....

.....

.....

..... [3]

(ii) Apart from cost, state **one** advantage and **one** disadvantage of generating electrical power using a hydroelectric power station compared to a coal-fired power station.

advantage .....

.....

disadvantage .....

.....

[2]

[Total: 8]

View solution

5 Fig. 5.1 shows a metal block at room temperature on a table.

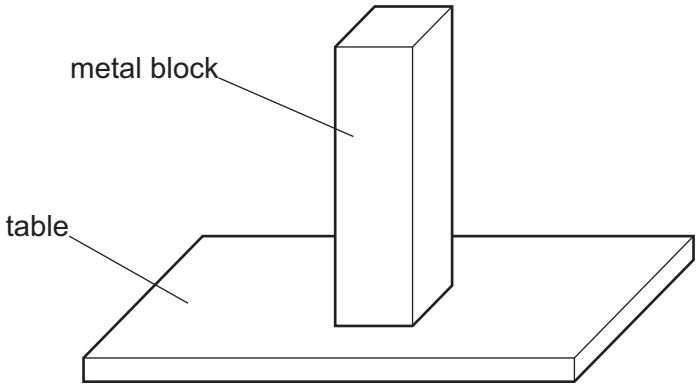

Fig. 5.1

(a) Describe the arrangement, separation and motion of the particles in the metal block.

View solution

.....

.....

.....

..... [3]

(b) **(i)** The temperature of the metal block decreases.

View solution

Describe any changes in the motion and separation of the particles in the metal block.

.....

..... [2]

(ii) A scientist cools the metal block until its temperature is close to absolute zero.

View solution

Describe the motion of the particles in the metal block.

.....

..... [1]

(c) The weight of the metal block is 26 N. The area of the metal block in contact with the table is 42 cm^2.

View solution

Calculate the pressure on the table due to the metal block.

pressure = ... N/cm^2 [3]

[Total: 9]

© UCLES 2024

6 A student studies different types of wave.

(a) She studies waves on the surface of water in a ripple tank. The frequency of the waves is 4.0 Hz. The wavelength of the waves is 5.0 cm.

Calculate the speed of the waves.

View solution

speed = ... cm / s [3]

(b) The student puts a block into the ripple tank, as shown in Fig. 6.1. The block sinks. The waves travel towards the block and then over the block.

View solution

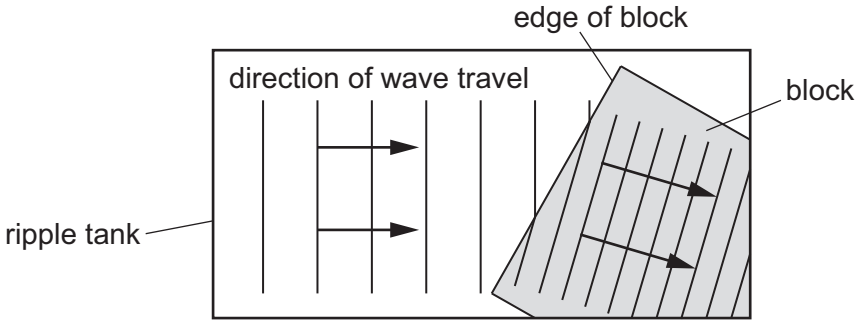

Fig. 6.1

State and explain what happens to the waves as they travel over the edge of the block.

.....

.....

..... [3]

(c) The chart in Fig. 6.2 shows the main regions of the electromagnetic spectrum.

radio waves	microwaves	infrared	visible light	ultraviolet	X-rays	gamma rays

Fig. 6.2

(i) State the name of **one** region in Fig. 6.2 that has longer wavelengths than visible light.

..... [1]

(ii) Describe **one** use of ultraviolet radiation.

View solution

..... [1]

(iii) Compare the speed of radio waves with the speed of gamma rays as they both travel through a vacuum.

..... [1]

[Total: 9]

© UCLES 2024

7 A battery, a lamp L, a fixed resistor R and a switch S are connected as shown in Fig. 7.1.

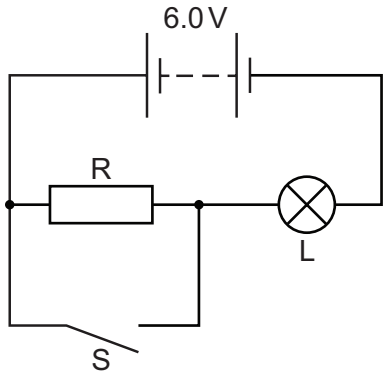

Fig. 7.1

(a) The potential difference (p.d.) across lamp L is 4.8 V and the current in lamp L is 0.40 A.

View solution

Calculate the resistance of lamp L.

resistance = ... Ω [3]

(b) State and explain how closing switch S affects the brightness of lamp L.

View solution

.....

.....

.....

..... [3]

[Total: 6]

8 **(a)** The battery in a laptop computer is connected to a battery charger for 20 minutes. The potential difference (p.d.) across the battery is 14 V. The current in the battery is 1.8 A.

Calculate the energy transferred to the battery in 20 minutes.

View solution

energy transferred = ... J [4]

(b) The battery charger includes a transformer. Fig. 8.1 shows the transformer.

View solution

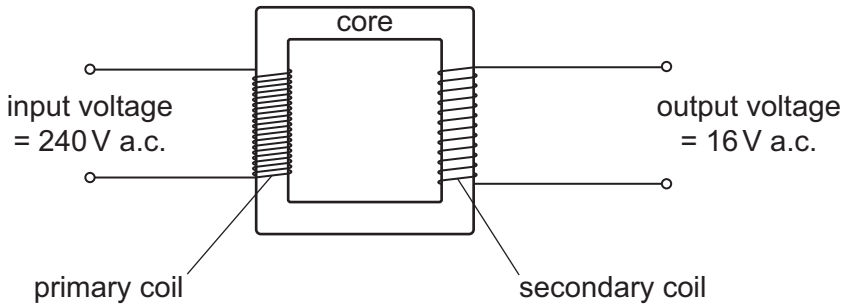

Fig. 8.1 (not to scale)

(i) State the name of the material used for the core of the transformer.

..... [1]

(ii) The transformer has 4800 turns on the primary (input) coil.

View solution

Calculate the number of turns on the secondary (output) coil.

Use information from Fig. 8.1.

number of turns = ... [3]

[Total: 8]

© UCLES 2024

9 **(a)** Fig. 9.1 shows an electricity cable that has a fault.

View solution

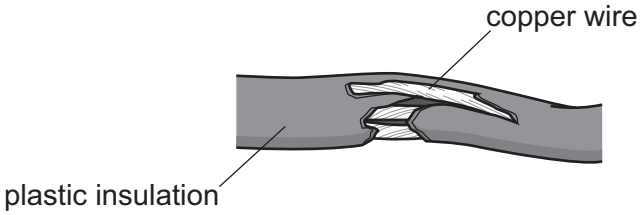

Fig. 9.1

The cable is used for supplying electricity at a high voltage.

State the fault and describe the hazard shown in Fig. 9.1.

fault .....

hazard .....

[2]

(b) Fig. 9.2 shows a piece of cable used in a mains circuit.

View solution

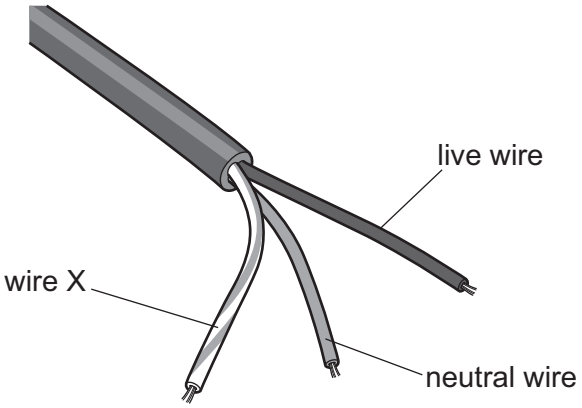

Fig. 9.2

(i) State the name of wire X in Fig. 9.2.

..... [1]

(ii) An electrical appliance is connected in the mains circuit. One of the wires in the cable is connected to the switch for the appliance.

View solution

State and explain which wire is connected to the switch.

.....

.....

..... [2]

[Total: 5]

© UCLES 2024

View solution

10 (a) U-235 and U-238 are isotopes of uranium.

Fig. 10.1 shows the nuclide notation for U-235 and for U-238.

$^{235}_{92}U$ $^{238}_{92}U$

Fig. 10.1

(i) Compare the number of **protons** in one nucleus of U-235 with the number of protons in one nucleus of U-238.

.....

..... [1]

(ii) Compare the number of **neutrons** in one nucleus of U-235 with the number of neutrons in one nucleus of U-238.

.....

..... [1]

(b) A sample contains another isotope of uranium. The half-life of this isotope is 24 minutes.

Calculate the time taken for the mass of this isotope in the sample to decay from 16.0 mg to 4.0 mg.

View solution

time taken = ... minutes [3]

[Total: 5]

© UCLES 2024

11 Table 11.1 shows some information about two of the planets in the Solar System.

Table 11.1

name of planet	mass of planet / kg	distance from the Sun / km	time for one rotation on its axis / hours
Venus	4.87×10^{24}	108.2×10^{6}	5832
Earth	5.97×10^{24}	149.6×10^{6}	24

(a) (i) Venus is a similar size to the Earth.

View solution

State why the gravitational field strength at the surface of the Earth is greater than the gravitational field strength at the surface of Venus.

..... [1]

(ii) Calculate the time, in Earth days, for **one** day on Venus.

View solution

time = ... Earth days [3]

(iii) Calculate the time taken for light to travel from the Sun to Venus. The speed of light is 3.0×10^{8} m / s.

View solution

time taken = ... s [4]

(b) The star nearest to the Sun is about 4.25 light-years from the Sun.

View solution

Explain what is meant by one light-year.

.....

..... [2]

[Total: 10]

BLANK PAGE

© UCLES 2024

BLANK PAGE

Permission to reproduce items where third-party owned material protected by copyright is included has been sought and cleared where possible. Every reasonable effort has been made by the publisher (UCLES) to trace copyright holders, but if any items requiring clearance have unwittingly been included, the publisher will be pleased to make amends at the earliest possible opportunity.

To avoid the issue of disclosure of answer-related information to candidates, all copyright acknowledgements are reproduced online in the Cambridge Assessment International Education Copyright Acknowledgements Booklet. This is produced for each series of examinations and is freely available to download at www.cambridgeinternational.org after the live examination series.

Cambridge Assessment International Education is part of Cambridge Assessment. Cambridge Assessment is the brand name of the University of Cambridge Local Examinations Syndicate (UCLES), which is a department of the University of Cambridge.

© UCLES 2024