Cambridge Assessment International Education

Cambridge IGCSE™

CANDIDATE NAME									
CENTRE NUMBER						CANDIDATE NUMBER				

PHYSICS **0625/52**

Paper 5 Practical Test **May/June 2024**

1 hour 15 minutes

You must answer on the question paper.

You will need: The materials and apparatus listed in the confidential instructions

INSTRUCTIONS

- Answer **all** questions.
- Use a black or dark blue pen. You may use an HB pencil for any diagrams or graphs.
- Write your name, centre number and candidate number in the boxes at the top of the page.
- Write your answer to each question in the space provided.
- Do **not** use an erasable pen or correction fluid.
- Do **not** write on any bar codes.
- You may use a calculator.
- You should show all your working and use appropriate units.

INFORMATION

- The total mark for this paper is 40.
- The number of marks for each question or part question is shown in brackets [ ].

For Examiner's Use	
1	
2	
3	
4	
Total	

This document has **16** pages. Any blank pages are indicated.

© UCLES 2024

BLANK PAGE

1 In this experiment, you will measure the spring constant k of a spring by two different methods.

The spring constant k of a spring is a measure of how difficult the spring is to stretch.

Method 1

View solution

(a) • Attach the spring to the clamp, as shown in Fig. 1.1.
• Suspend a mass m = 500 g from the spring.

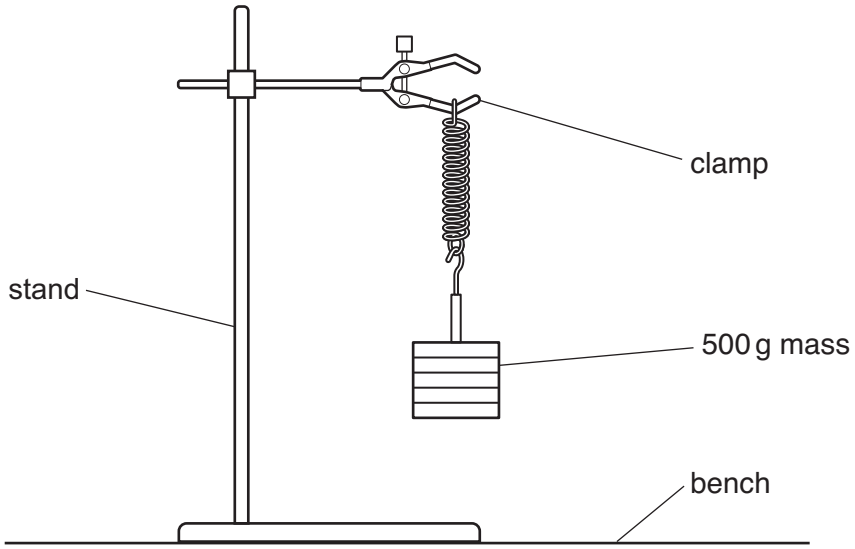

Fig. 1.1

• Pull the mass down a small distance (2–3 cm) from its rest position and release it.

The mass oscillates up and down.

The period T of the oscillations is the time taken for **one** oscillation.

One complete oscillation of the mass is shown in Fig. 1.2.

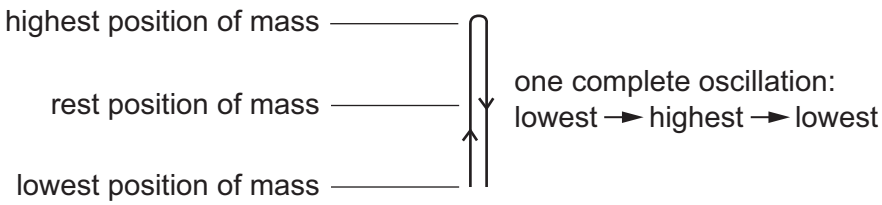

Fig. 1.2

(i) Measure the time t taken for 20 oscillations. Do **not** remove the mass from the spring.

Record t in Table 1.1. [1]

Table 1.1

m/g	t/s	T/s
500		

(ii) Calculate the period T of the oscillations.

View solution

Record your answer in Table 1.1. [1]

(iii) Suggest how the procedure can be improved to increase the accuracy of the result.

View solution

.....

..... [1]

(iv) Calculate a value k_1 for the spring constant of the spring.

Use the equation shown. Give your answer to an appropriate number of significant figures.

View solution

$$k_1 = \frac{19.7}{T^2}$$

k_1 = ... N/m [1]

Method 2

(b) (i) With the 500 g mass still suspended from the spring, measure the stretched length l of the spring in centimetres to the nearest 0.1 cm.

View solution

Do **not** include the loops at the ends of the spring in your measurement.

Record l in Table 1.2.

Table 1.2

m/g	l/cm
500	
400	
300	
200	
100	

[1]

(ii) Carefully remove the 100 g masses from the mass hanger, one at a time, and repeat the procedure in **(b)(i)** for m = 400 g, 300 g, 200 g and 100 g.

Record each value of l in Table 1.2. [1]

View solution

© UCLES 2024

(iii) Plot a graph of l/cm (y-axis) against m/g (x-axis). Start your axes at the origin $(0, 0)$.

View solution

Draw the best-fit line.

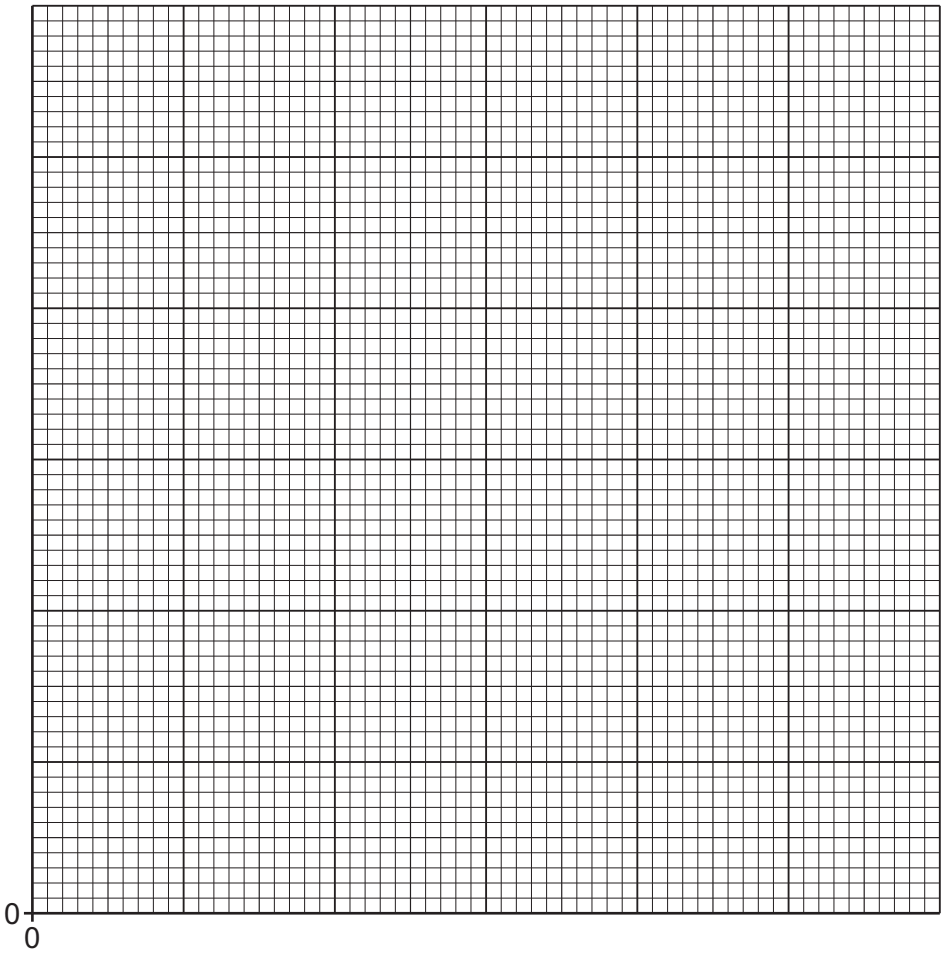

[3]

(iv) Determine the gradient G of your line. Show all working and indicate on the graph the values you use.

View solution

G = ... [1]

(v) An estimated value k_2 for the spring constant of the spring can be calculated using the equation

View solution

$$k_2 = \frac{1}{G}.$$

Calculate k_2 using your value of G from **(b)(iv)** and the equation shown.

k_2 = ... N/m [1]

© UCLES 2024

(c) Two quantities can be considered to be equal within the limits of experimental accuracy if their values are within 10% of each other.

View solution

Compare your values of k_1 from **(a)(iv)** and k_2 from **(b)(v)**.

State whether your results indicate that the values can be considered to be equal.

Support your statement with a calculation.

.....

.....

[2]

[Total: 13]

BLANK PAGE

© UCLES 2024

2 In this experiment, you will investigate the resistance R of a diode using the circuit shown in Fig. 2.1.

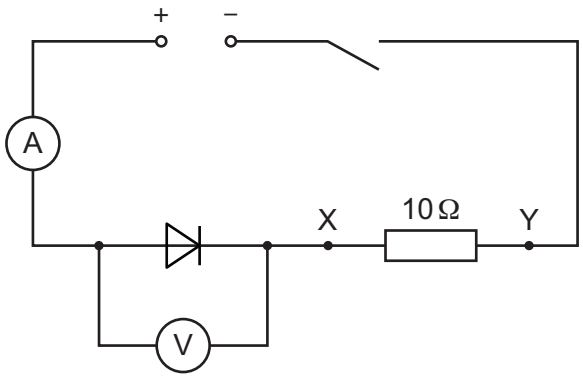

Fig. 2.1

View solution

(a)
- Close the switch.
- Record the voltmeter reading V in the first row of Table 2.1.
- Record the ammeter reading I in the first row of Table 2.1.
- Open the switch.

[1]

Table 2.1

resistance between X and Y / Ω	V / V	I / A	R / Ω
10			
13			
20			

(b)
- Use a spare connecting lead to connect the 3 Ω resistor in series with the 10 Ω resistor between terminals X and Y, as shown in Fig. 2.2.

View solution

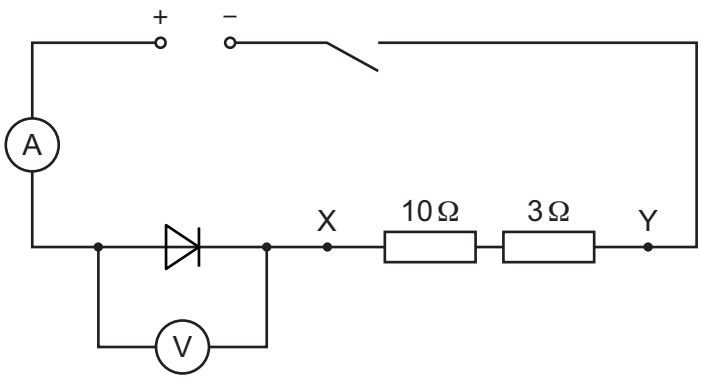

Fig. 2.2

- Record the voltmeter reading V in the second row of Table 2.1.
- Record the ammeter reading I in the second row of Table 2.1.
- Open the switch.

[2]

© UCLES 2024

(c) Connect the 7 Ω, 10 Ω and 3 Ω resistors in series between X and Y. Repeat the procedure in **(b)** with this arrangement of resistors. [1]

(d) Calculate the resistance R of the diode for each pair of readings of V and I from Table 2.1.

View solution

Use the equation $R = \frac{V}{I}$.

Record your answers in Table 2.1.

[2]

(e) As the resistance between terminals X and Y is increased, the current in the circuit changes.

Use your results in Table 2.1 to state the relationship between the current in the circuit and:

(i) the potential difference (p.d.) V across the diode

View solution

.....

..... [1]

(ii) the resistance R of the diode.

View solution

.....

..... [1]

(f) A student attempts to set up the circuit shown in Fig. 2.1. The student finds that the ammeter does **not** give a reading when the circuit is complete. The ammeter is **not** broken.

Suggest what the student may have done incorrectly while setting up the circuit.

View solution

..... [1]

(g) Name a single device that can be used to control the current in the circuit instead of adding extra resistors in series.

Draw the electrical symbol for the device.

View solution

name of device .....

electrical symbol

[1]

[Total: 10]

© UCLES 2024

3 In this experiment, you will investigate the deviation of a ray of light passing through a transparent block and determine a quantity called the refractive index *n* of the block.

View solution

(a) Fig. 3.2 is on page 11 of your question paper.

- On Fig. 3.2, draw a normal to the line **XY** at the point **E**. Extend your normal above and below **XY**.

Measure the angle θ between **FE** and the normal.

θ = ...° [1]

(b)
- Extend the line **FE** until it almost meets the right-hand side of the page and label the end of the line **G**.
- Place the block on Fig. 3.2 with one of the long sides of the block along the line **XY**. The top left-hand corner of the block must be at **A**, as shown in Fig. 3.1.

View solution

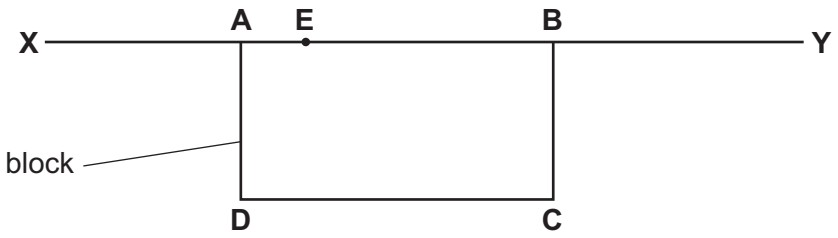

Fig. 3.1

- On Fig. 3.2, draw around the outline of the block.
- Remove the block.
- Label the outline of the block **ABCD**, as shown in Fig. 3.1.
- Mark the point where the normal crosses side **CD** of the block with the letter **H**.
- Replace the block.
- Switch on the lamp.
- Position the illuminated slit so that a ray of light passes along the line **FE** towards **E**.

On Fig. 3.2, mark and label with small crosses (x) **two** points on the ray that leaves side **CD** of the block.

Choose the position of the points so that the direction of the ray leaving the block can be accurately drawn. [1]

(c)
- Remove the block.
- Draw a straight line through the two crosses to meet side **CD** of the block.
- Label the point where the line meets **CD** with the letter **J** and label the other end of the line **K**.
- Draw a straight line from **E** to **J**. This shows the path of the ray of light through the block.

© UCLES 2024



Fig. 3.2

(i) Measure the length l of **EJ**.

View solution

l = ... cm [1]

(ii) Measure the perpendicular distance d between the line **JK** and the line **FG**.

View solution

d = ... cm [1]

(iii) Calculate $\frac{d}{l}$.

View solution

$\frac{d}{l}$ = ... [1]

© UCLES 2024

(d) Suggest **one** source of inaccuracy in this experiment, even if it is carried out very carefully.

.....

..... [1]

(e) The measurement of a quantity is reproducible if a similar result is obtained when the measurement is repeated by a different method or under different conditions.

Suggest how you can adapt this experiment to check if your value of $\frac{d}{l}$ is reproducible.

View solution

You are **not** required to do this experiment.

.....

.....

..... [1]

(f) **(i)** Measure the length *L* of **HJ**.

View solution

L = ... cm [1]

(ii) Use your value of l from **(c)(i)** and *L* from **(f)(i)** to calculate $\frac{l}{L}$.

View solution

$\frac{l}{L}$ = ... [1]

(iii) Calculate a value *n* for the refractive index of the block. Use the equation shown.

View solution

$$n = 0.866 \times \frac{l}{L}$$

n = ... [1]

[Total: 10]

© UCLES 2024

BLANK PAGE

4 A student sets up a flexible track at the edge of a bench. The student investigates a metal ball as it rolls from rest down the track and travels through the air. The metal ball travels a horizontal distance *d* through the air and lands in a tray of sand placed on the floor.

View solution

Plan an experiment to investigate how **one** variable affects the size of this distance *d*.

The apparatus available includes:

- flexible track
- clamp, boss and stand to support the track
- selection of metal balls.

Fig. 4.1 shows how the flexible track is supported.

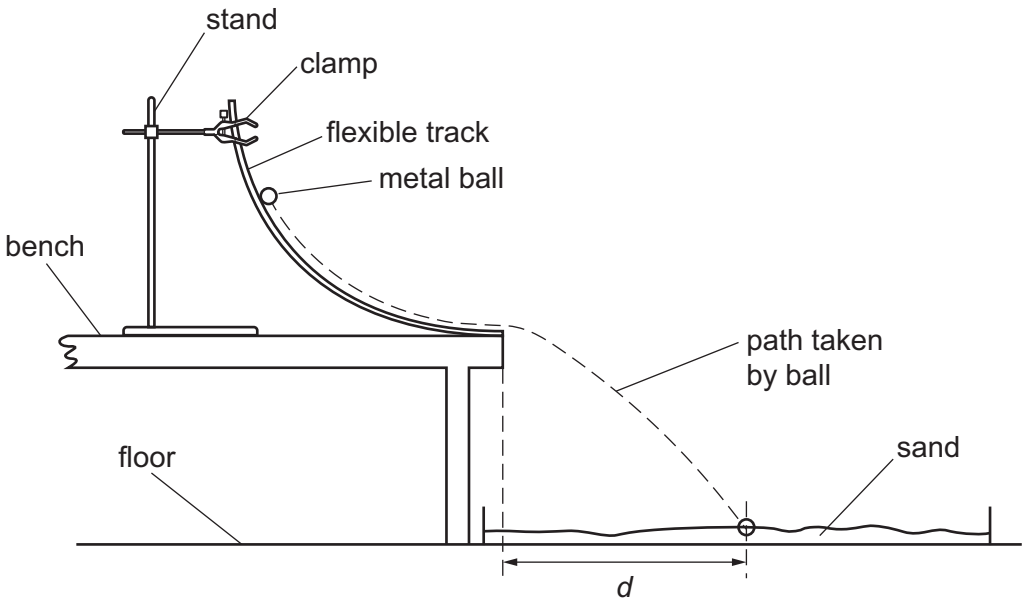

Fig. 4.1

You are **not** required to do this investigation.

In your plan:

- state the **one** variable you have chosen to investigate
- list any additional apparatus needed to measure this variable
- explain how to do the experiment
- state the key variables to be kept constant
- draw a table, with column headings, to show how to display the readings (you are **not** required to enter any readings in the table)
- explain how to use the readings to reach a conclusion.

© UCLES 2024

.....

.....

.....

.....

.....

.....

.....

.....

.....

.....

.....

.....

.....

.....

.....

.....

.....

..... [7]

BLANK PAGE

Permission to reproduce items where third-party owned material protected by copyright is included has been sought and cleared where possible. Every reasonable effort has been made by the publisher (UCLES) to trace copyright holders, but if any items requiring clearance have unwittingly been included, the publisher will be pleased to make amends at the earliest possible opportunity.

To avoid the issue of disclosure of answer-related information to candidates, all copyright acknowledgements are reproduced online in the Cambridge Assessment International Education Copyright Acknowledgements Booklet. This is produced for each series of examinations and is freely available to download at www.cambridgeinternational.org after the live examination series.

Cambridge Assessment International Education is part of Cambridge Assessment. Cambridge Assessment is the brand name of the University of Cambridge Local Examinations Syndicate (UCLES), which is a department of the University of Cambridge.

© UCLES 2024