Cambridge Assessment International Education

Cambridge IGCSE™

CANDIDATE NAME									
CENTRE NUMBER						CANDIDATE NUMBER				

PHYSICS **0625/53**

Paper 5 Practical Test **May/June 2024**

1 hour 15 minutes

You must answer on the question paper.

You will need: The materials and apparatus listed in the confidential instructions

INSTRUCTIONS

- Answer **all** questions.
- Use a black or dark blue pen. You may use an HB pencil for any diagrams or graphs.
- Write your name, centre number and candidate number in the boxes at the top of the page.
- Write your answer to each question in the space provided.
- Do **not** use an erasable pen or correction fluid.
- Do **not** write on any bar codes.
- You may use a calculator.
- You should show all your working and use appropriate units.

INFORMATION

- The total mark for this paper is 40.
- The number of marks for each question or part question is shown in brackets [ ].

For Examiner's Use	
1	
2	
3	
4	
Total	

This document has **12** pages. Any blank pages are indicated.

© UCLES 2024

1 In this experiment, you will determine the density of modelling clay by two methods.

Refer to Fig. 1.1.

Method 1

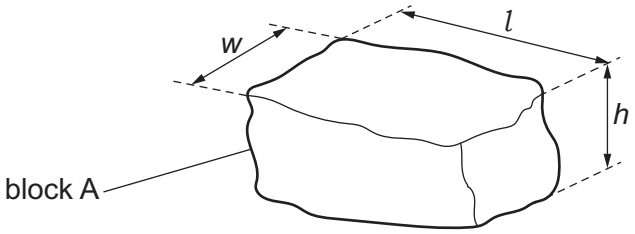

Fig. 1.1

(a) (i) Measure the length l, width w and height h of block A. Record your values in centimetres to the nearest millimetre.

View solution

l = ... cm

w = ... cm

h = ... cm
[1]

(ii) Calculate the volume V_A of block A. Use your measurements from **(a)(i)** and the equation $V_A = l \times w \times h$.

View solution

V_A = ... cm^3 [1]

(b) Suggest a possible source of inaccuracy in measuring the dimensions of the block.

View solution

Describe how the accuracy of these measurements can be improved.

You are **not** required to do this improved investigation.

suggestion .....

.....

improvement .....

.....
[2]

(c) Measure the mass m_A of block A. Use the top-pan balance.

m_A = ... g [1]

View solution

(d) Calculate a value ρ_A for the density of the modelling clay. Use your results from **(a)(ii)** and **(c)** and the equation $\rho_A = \frac{m_A}{V_A}$. Include the unit for the density.

View solution

ρ_A = ... [2]

Method 2

(e) Measure the weight W_B of block B, as shown in Fig. 1.2.

View solution

W_B = ... N [1]

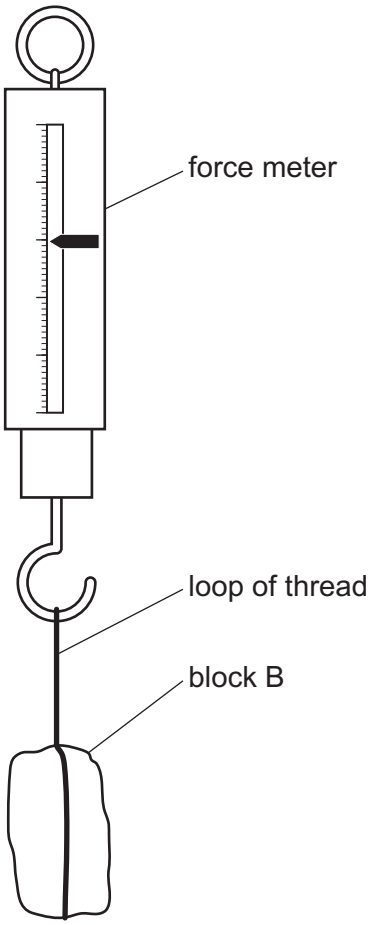

Fig. 1.2

© UCLES 2024

(f) (i) Pour approximately 60 cm^3 of water into the measuring cylinder.

View solution

Measure and record the actual volume V_1 of the water in the measuring cylinder.

V_1 = ... cm^3

Remove the loop of thread from the force meter and lower block B carefully into the water in the measuring cylinder, as shown in Fig. 1.3.

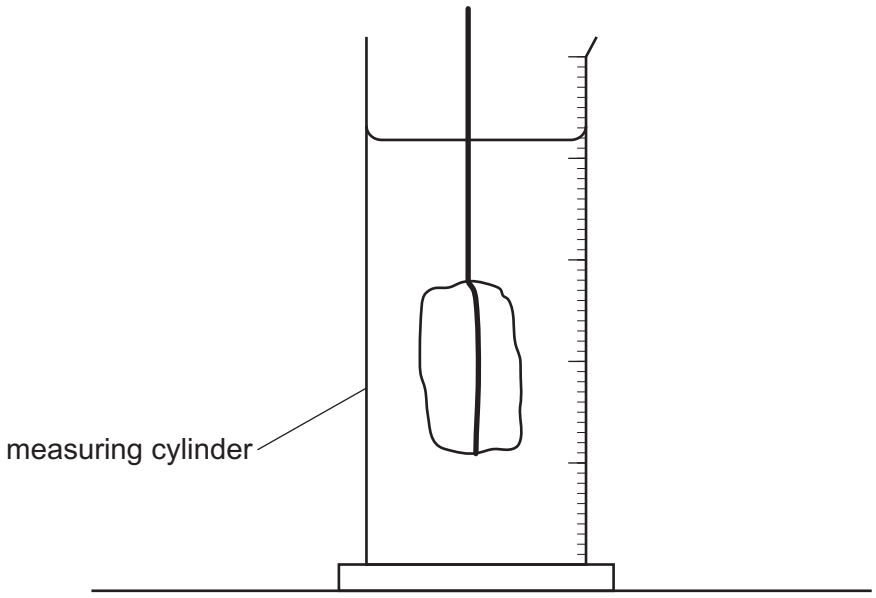

Fig. 1.3

Measure and record the new reading V_2 of the measuring cylinder.

V_2 = ... cm^3
[1]

(ii) Draw an arrow on Fig. 1.4 to show the correct line of sight to obtain the value for the volume of water in the measuring cylinder.

View solution

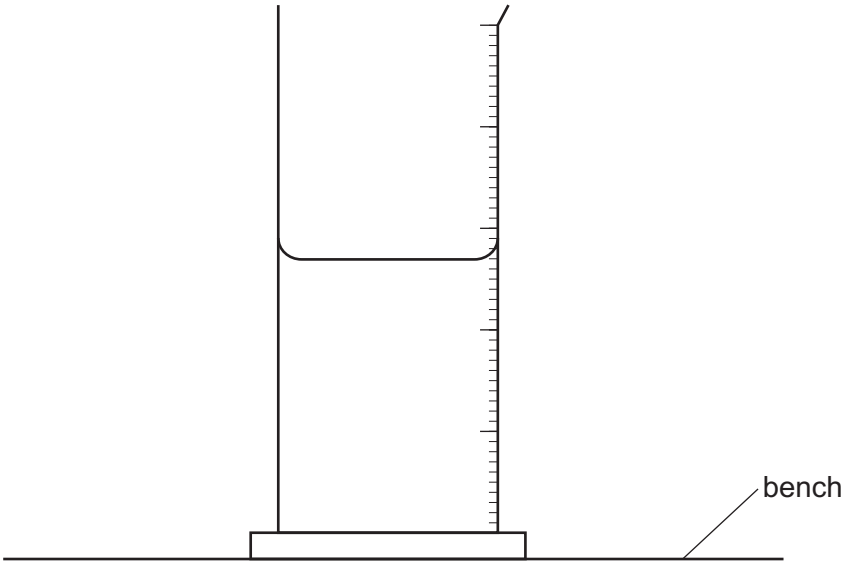

Fig. 1.4 [1]

(g) Calculate another value ρ_B for the density of modelling clay. Use your readings from **(e)** and **(f)** and the equation $\rho_B = \frac{W_B \times k}{(V_2 - V_1)}$, where $k = 100\,g/N$.

View solution

ρ_B = ... [1]

[Total: 11]

2 In this experiment, you will investigate how the volume of water affects the rate at which hot water in a beaker cools.

Refer to Fig. 2.1.

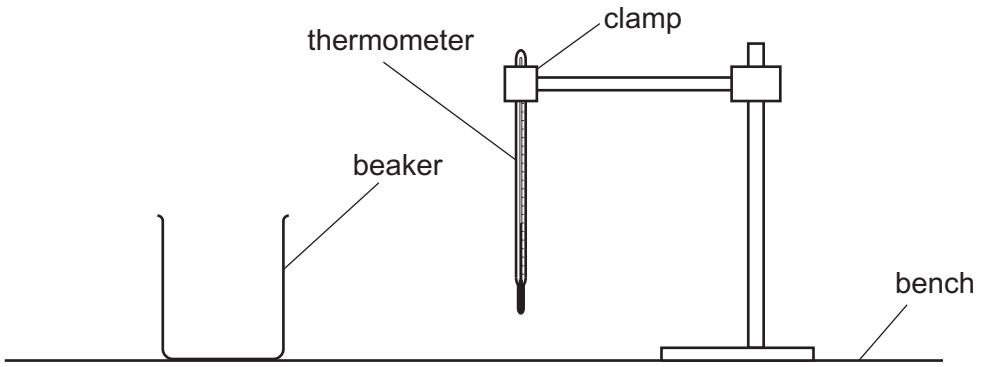

Fig. 2.1

(a) Pour 200 cm^3 of hot water into the beaker. Use the graduations on the beaker as a guide. Place the thermometer in the water.

View solution

In the first row of Table 2.1, record the temperature θ of the water at time t = 0 and immediately start the stop-watch.

Record the temperature θ of the water at times t = 30 s, 60 s, 90 s, 120 s, 150 s and 180 s.

Remove the thermometer from the beaker and pour out the water. [1]

(b) **(i)** Repeat **(a)**, using only 75 cm^3 of hot water. [2]

(ii) Add units to the column headings in Table 2.1.

View solution

Table 2.1

	beaker with 200 cm^3 of hot water	beaker with 75 cm^3 of hot water
t /	θ /	θ /
0		
30		
60		
90		
120		
150		
180		

[1]

© UCLES 2024

(c) Write a conclusion stating how the volume of hot water affects the rate of cooling of the water. Justify your answer by reference to your results.

.....

.....

.....

..... [2]

(d) **(i)** Using your values for 75 cm^3 of water, calculate the average cooling rate x_1 for the first 90 s of the experiment. Use your readings from Table 2.1 and the equation

View solution

$$x_1 = \frac{\theta_0 - \theta_{90}}{T}$$

where T = 90 s and θ_0 and θ_{90} are the temperatures at t = 0 and t = 90 s.
Include the unit for the cooling rate.

x_1 = ... [2]

(ii) Using your values for 75 cm^3 of water, calculate the average cooling rate x_2 for the last 90 s of the experiment. Use your readings from Table 2.1 and the equation

View solution

$$x_2 = \frac{\theta_{90} - \theta_{180}}{T}$$

where T = 90 s and θ_{90} and θ_{180} are the temperatures at t = 90 s and t = 180 s.

x_2 = ... [1]

(iii) A student states that it is important to start the two experiments in **(a)** and **(b)** with water at the same initial temperature.

View solution

Explain whether your values for x_1 and x_2 support this statement.

.....

.....

..... [1]

(e) Another student repeats the experiment.

View solution

State **one** variable, other than initial water temperature, that she should control to obtain readings that are as close as possible to those in Table 2.1.

.....

..... [1]

[Total: 11]

3 In this experiment, you will determine the focal length of a converging lens.

Refer to Fig. 3.1.

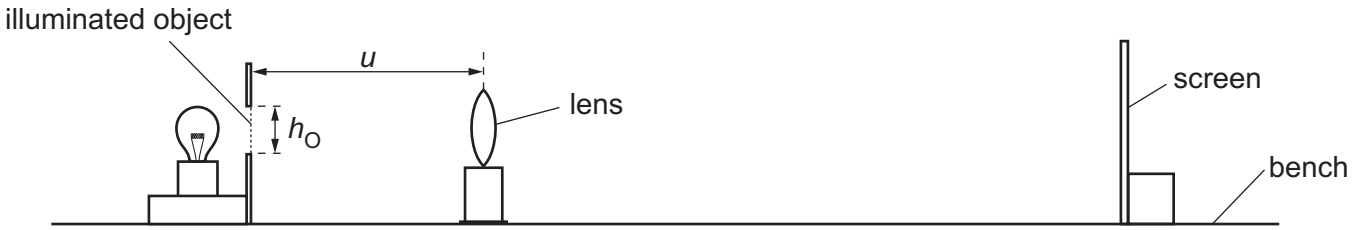

Fig. 3.1

(a) Set up the apparatus as shown in Fig. 3.1.

View solution

(i) Measure the height h_O of the illuminated object. Fig. 3.1 shows the height to measure on the illuminated object provided.

h_O = ... cm [1]

View solution

(ii) Place the lens a distance u = 20.0 cm from the illuminated object.
Place the screen near the lens.
Switch on the lamp.
Move the screen until a focused image of the illuminated object is seen on the screen.

Measure, and record in Table 3.1, the height h_I of the image on the screen.

Repeat the procedure for u = 25.0 cm, 30.0 cm, 35.0 cm and 40.0 cm.

Switch off the lamp.

Table 3.1

u / cm	h_I / cm	W
20.0		
25.0		
30.0		
35.0		
40.0		

[1]

View solution

(iii) Describe a technique for obtaining an image that is as sharp as possible.

.....

.....

..... [1]

(b) For each distance u, calculate, and record in Table 3.1, a value W. Use your results from **(a)** and the equation $W = \frac{h_O}{h_I}$.

View solution

[1]

(c) Plot a graph of u/cm (y-axis) against W (x-axis). You do **not** need to start your axes at the origin (0, 0). Draw the best-fit line.

View solution

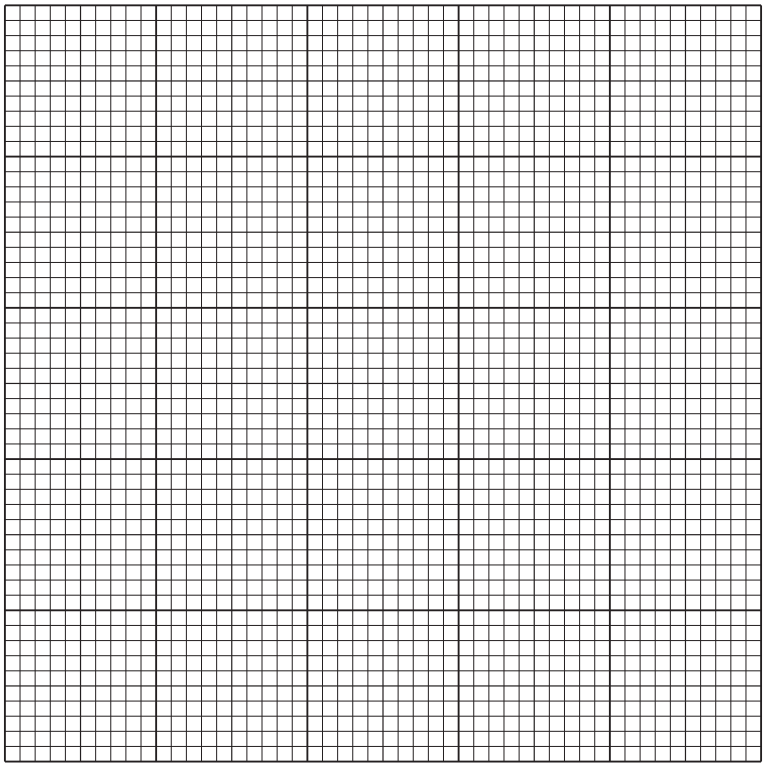

[4]

(d) **(i)** Determine the gradient G of the line. Show clearly on the graph how you obtained the necessary information.

View solution

G = ... [1]

(ii) The focal length f of the lens is numerically equal to the gradient G.

Record a value of f for this experiment.

View solution

f = ... cm [1]

(e) A student decides to continue the experiment using larger values of u.

Explain why this produces less accurate values for W.

View solution

.....

.....

..... [1]

[Total: 11]

© UCLES 2024

4 A student investigates the relationship between the diameter of a wire and the electrical resistance of the wire.

Plan an experiment which enables him to investigate how the diameter of a wire affects the resistance of the wire.

View solution

Resistance R is calculated from the equation $R = \frac{V}{I}$

where V is the potential difference (p.d.) across the wire and I is the current in the wire.

You are **not** required to do this experiment.

The apparatus available includes wires of different known diameters.

In your plan:

- list any additional apparatus needed
- complete Fig. 4.1 to show a circuit suitable for measuring the resistance of a wire
- explain briefly how to do the experiment, including the measurements to take so that the resistance can be determined
- state the key variables to keep constant
- draw a table, or tables, with column headings, to show how to display the readings (you are **not** required to enter any readings in the table)
- explain how to use the readings to reach a conclusion.

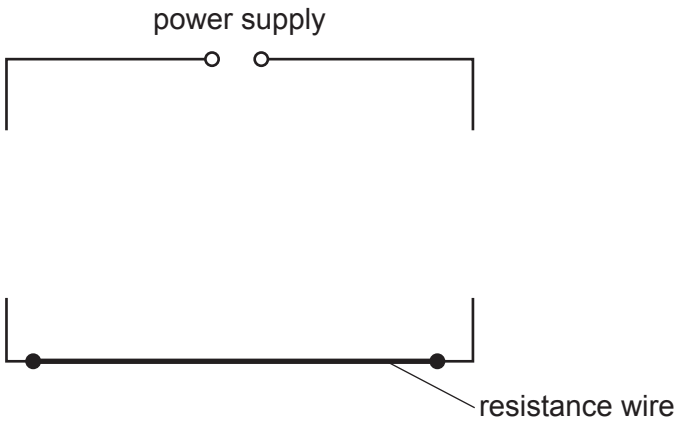

Fig. 4.1

© UCLES 2024

.....

.....

.....

.....

.....

.....

.....

.....

.....

.....

.....

.....

.....

.....

.....

.....

.....

..... [7]

BLANK PAGE

Permission to reproduce items where third-party owned material protected by copyright is included has been sought and cleared where possible. Every reasonable effort has been made by the publisher (UCLES) to trace copyright holders, but if any items requiring clearance have unwittingly been included, the publisher will be pleased to make amends at the earliest possible opportunity.

To avoid the issue of disclosure of answer-related information to candidates, all copyright acknowledgements are reproduced online in the Cambridge Assessment International Education Copyright Acknowledgements Booklet. This is produced for each series of examinations and is freely available to download at www.cambridgeinternational.org after the live examination series.

Cambridge Assessment International Education is part of Cambridge Assessment. Cambridge Assessment is the brand name of the University of Cambridge Local Examinations Syndicate (UCLES), which is a department of the University of Cambridge.

© UCLES 2024