Cambridge Assessment International Education

Cambridge IGCSE™

CANDIDATE NAME									
CENTRE NUMBER						CANDIDATE NUMBER				

PHYSICS **0625/61**

Paper 6 Alternative to Practical **May/June 2024**

1 hour

You must answer on the question paper.

No additional materials are needed.

INSTRUCTIONS

- Answer **all** questions.
- Use a black or dark blue pen. You may use an HB pencil for any diagrams or graphs.
- Write your name, centre number and candidate number in the boxes at the top of the page.
- Write your answer to each question in the space provided.
- Do **not** use an erasable pen or correction fluid.
- Do **not** write on any bar codes.
- You may use a calculator.
- You should show all your working and use appropriate units.

INFORMATION

- The total mark for this paper is 40.
- The number of marks for each question or part question is shown in brackets [ ].

This document has **12** pages. Any blank pages are indicated.

© UCLES 2024

BLANK PAGE

1 A student investigates the stretching of a spring.

Fig. 1.1 shows the set-up.

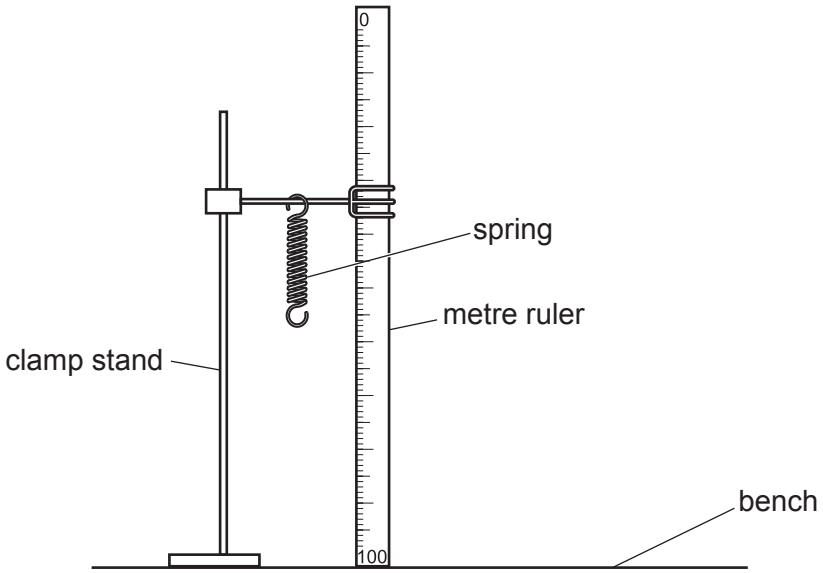

Fig. 1.1

(a) The student measures, and records in Table 1.1, the unstretched length l_0 of the spring. He does **not** include the loops at the ends of the spring in the measurement. The value l_0 is the length of the spring when the load *L* on the spring is 0.00 N.

Describe **one** technique you would use to obtain an accurate value for l_0. Draw a diagram to illustrate your answer.

View solution

.....

.....

..... [2]

(b) The student suspends a load *L* = 1.00 N from the spring. He records the new length l of the spring in Table 1.1.

He calculates the extension *e* of the spring using the equation $e = (l - l_0)$ and records the value of *e* in Table 1.1.

View solution

The student repeats the procedure using loads *L* = 2.00 N, 3.00 N, 4.00 N and 5.00 N. The readings and results are recorded in Table 1.1.

© UCLES 2024

Calculate the extension e of the spring using the equation $e = (l - l_0)$ when $L = 5.00\,\text{N}$. Record this value of e in Table 1.1.

Table 1.1

L / N	l / cm	e / cm
0.00	2.1	0.0
1.00	6.0	3.9
2.00	10.6	8.5
3.00	14.9	12.8
4.00	19.3	17.2
5.00	23.7	

[1]

(c) Plot a graph of L / N (y-axis) against e / cm (x-axis). Start both axes at the origin $(0, 0)$. Draw the best-fit line.

View solution

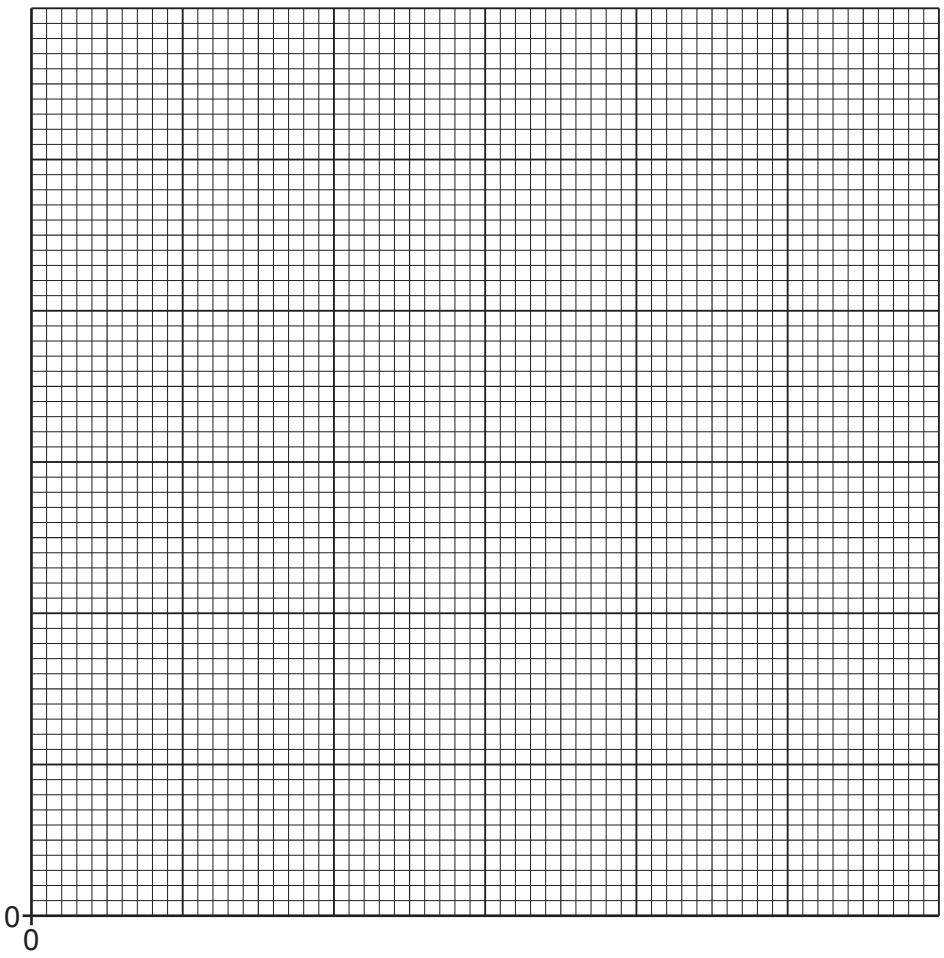

[4]

(d) Determine the gradient *G* of the graph. Show all your working and indicate on the graph the values you use.

View solution

G = ... [2]

(e) *G* is numerically equal to the spring constant *k*.

Record the value of *k* to a suitable number of significant figures for this experiment. Include the unit.

k = ... [2]

[Total: 11]

View solution

2 A student investigates the resistance of a wire.

Fig. 2.1 shows the circuit used.

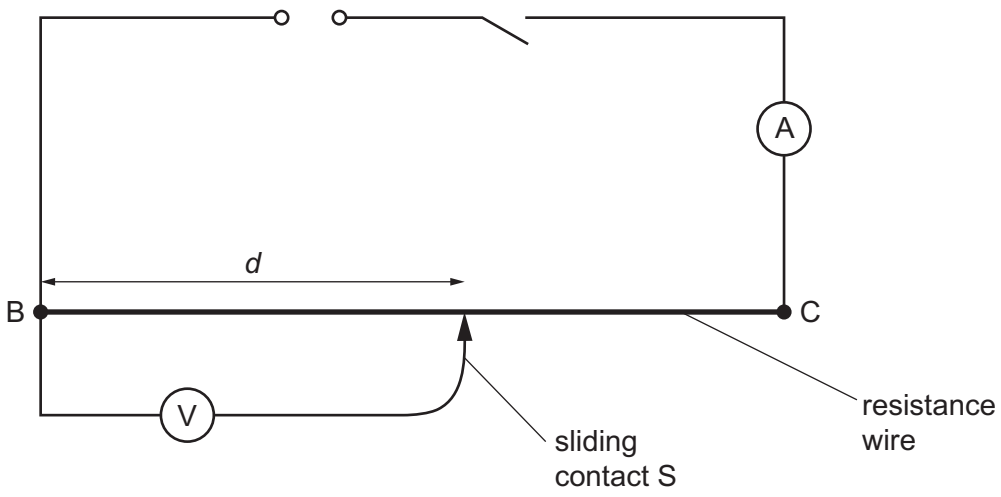

Fig. 2.1

View solution

(a) The student measures the current I in the circuit.

She places the sliding contact S at a distance d = 50.0 cm from B.

She measures the potential difference (p.d.) V_{50} across length d of the resistance wire.

Fig. 2.2 shows the ammeter and voltmeter.

(i) Record the readings on the ammeter and voltmeter. Include the units.

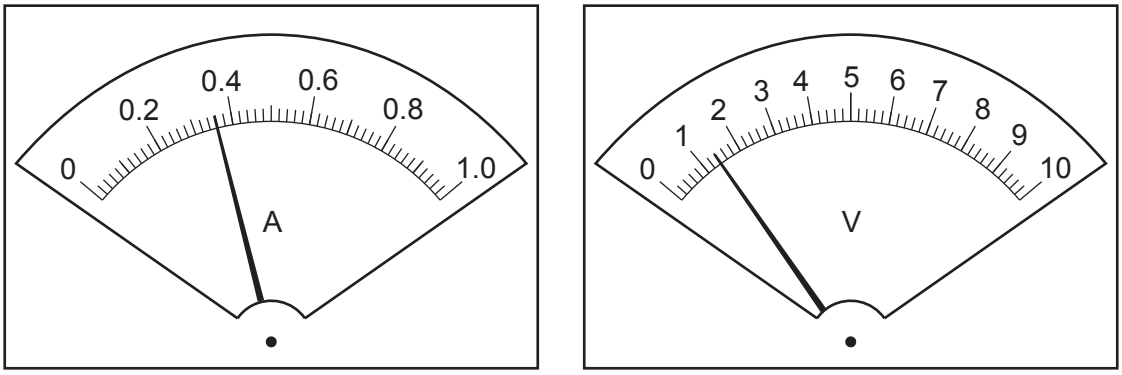

Fig. 2.2

I = ...

V_{50} = ...

[2]

(ii) Calculate the resistance R_{50} of 50.0 cm of the resistance wire using the equation

$$R_{50} = \frac{V_{50}}{I}.$$

View solution

Include the unit.

R_{50} = ... [2]

(iii) Calculate r_1, a value for the resistance per cm of the resistance wire, using the equation

$$r_1 = \frac{R_{50}}{d},$$

View solution

where d = 50.0 cm. Include the unit.

r_1 = ... [2]

(b) The student repeats the procedure in **(a)** using d = 75.0 cm and calculates r_2 using the equation

$$r_2 = \frac{R_{75}}{d}.$$

View solution

V_{75} = ... 2.2 .....

R_{75} = ... 6.1 .....

r_2 = ... 0.081 .....

A student suggests that the resistance per cm of the resistance wire is constant.

(i) State whether your results support this suggestion and justify your statement by reference to the results.

statement .....

justification .....

.....

.....

[2]

(ii) The student plans to plot a graph of resistance R against length d to test the suggestion.

Suggest suitable additional values of length d to use.

..... [2]

(c) A variable resistor is a circuit component that can be made using a coil of resistance wire.

View solution

Draw the electrical symbol for a variable resistor.

[1]

[Total: 11]

3 A student investigates the image produced by a lens.

Fig. 3.1 shows the set-up.

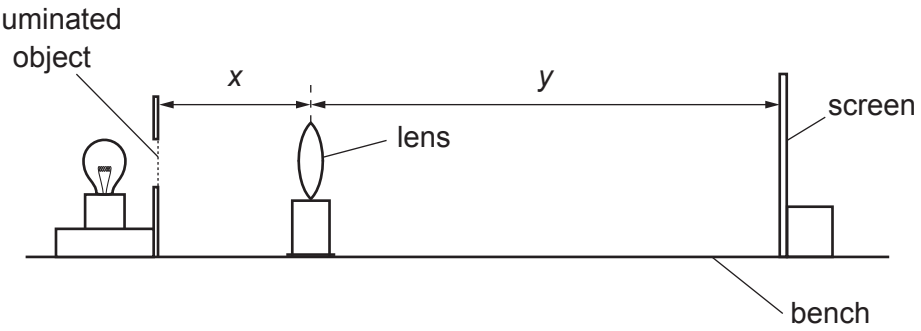

Fig. 3.1

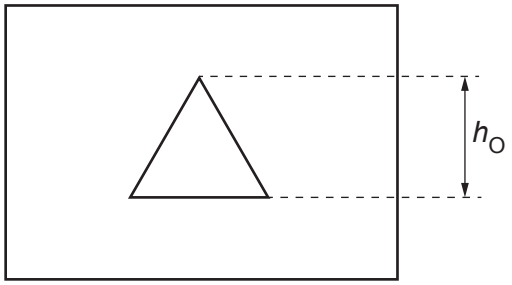

Fig. 3.2

(a) Fig. 3.2 shows the height h_O of the illuminated object.

On Fig. 3.2, measure h_O.

h_O = ... [2]

(b) Fig. 3.1 is drawn to scale. The actual distance u between the illuminated object and the lens is 20.0 cm.

(i) On Fig. 3.1, measure the distance x.

x = ... [1]

(ii) Calculate the scale ratio r using the equation

$$r = \frac{u}{x},$$

where u = 20.0 cm.

r = ... [1]

(c) The student moves the screen until a focused image is formed on the screen.

View solution

(i) On Fig. 3.1, measure the distance y.

y = ... cm [1]

(ii) Calculate the actual distance v between the lens and the screen using the equation $v = ry$. Use your value for r from **(b)(ii)**.

View solution

v = ... cm [1]

(d) Calculate the focal length f of the lens using the equation

View solution

$$f = \frac{uv}{(u + v)}.$$

Give your answer to a suitable number of significant figures for this type of experiment.

f = ... cm [2]

(e) In this type of experiment, it can be difficult to judge the screen position that produces the clearest image.

View solution

Suggest **two** precautions or techniques to overcome this difficulty.

1 .....

.....

2 .....

.....

[2]

(f) Fig. 3.2 shows the shape of the illuminated object. The image of the object is enlarged.

View solution

Draw a diagram to show the image that you would see on the screen.

[1]

[Total: 11]

© UCLES 2024

4 A student investigates the bending of composite strips of wood when they are loaded at one end. The composite strips are made from identical layers of wood stuck together, as shown in Fig. 4.1.

Plan an experiment to investigate how much composite strips bend when they are loaded at one end. Fig. 4.2 shows the set-up the student uses.

View solution

The student has a number of composite strips made with two or more layers of wood.

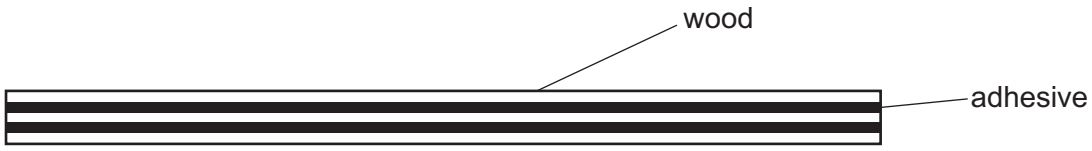

Fig. 4.1

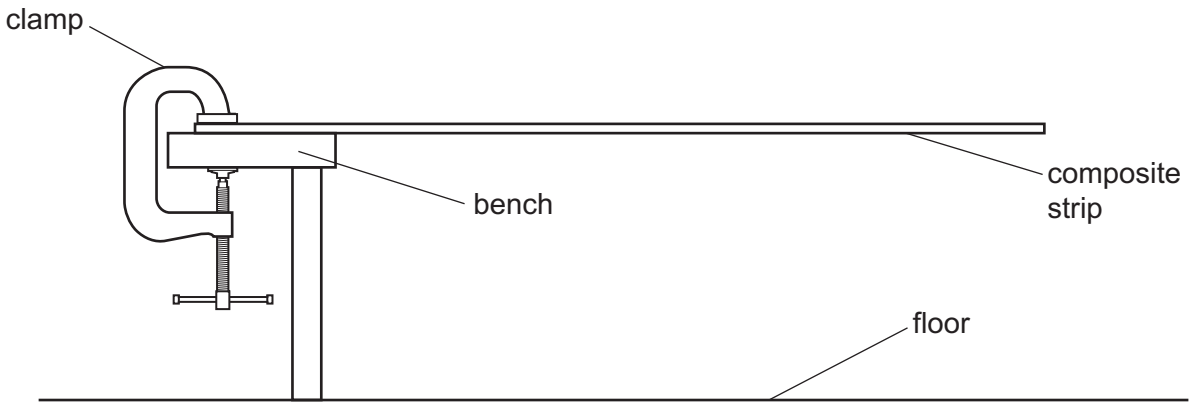

Fig. 4.2

In your plan:

- state the variable that you are testing
- list any additional apparatus that you would use
- explain briefly how to do the investigation
- state the key variables to keep constant
- draw a table, or tables, with column headings, to show how to display your readings (you are **not** required to enter any readings in the table)
- explain how to use your readings to reach a conclusion.

.....

.....

.....

.....

.....

.....

.....

.....

.....

.....

.....

.....

.....

.....

.....

.....

.....

..... [7]

BLANK PAGE

Permission to reproduce items where third-party owned material protected by copyright is included has been sought and cleared where possible. Every reasonable effort has been made by the publisher (UCLES) to trace copyright holders, but if any items requiring clearance have unwittingly been included, the publisher will be pleased to make amends at the earliest possible opportunity.

To avoid the issue of disclosure of answer-related information to candidates, all copyright acknowledgements are reproduced online in the Cambridge Assessment International Education Copyright Acknowledgements Booklet. This is produced for each series of examinations and is freely available to download at www.cambridgeinternational.org after the live examination series.

Cambridge Assessment International Education is part of Cambridge Assessment. Cambridge Assessment is the brand name of the University of Cambridge Local Examinations Syndicate (UCLES), which is a department of the University of Cambridge.

© UCLES 2024