Cambridge Assessment International Education

Cambridge IGCSE™

CANDIDATE NAME									
CENTRE NUMBER						CANDIDATE NUMBER			

PHYSICS **0625/62**

Paper 6 Alternative to Practical **May/June 2024**

1 hour

You must answer on the question paper.

No additional materials are needed.

INSTRUCTIONS

- Answer **all** questions.
- Use a black or dark blue pen. You may use an HB pencil for any diagrams or graphs.
- Write your name, centre number and candidate number in the boxes at the top of the page.
- Write your answer to each question in the space provided.
- Do **not** use an erasable pen or correction fluid.
- Do **not** write on any bar codes.
- You may use a calculator.
- You should show all your working and use appropriate units.

INFORMATION

- The total mark for this paper is 40.
- The number of marks for each question or part question is shown in brackets [ ].

This document has **16** pages. Any blank pages are indicated.

© UCLES 2024

1 A student measures the spring constant k of a spring by two different methods.

The spring constant k of a spring is a measure of how difficult the spring is to stretch.

Method 1

View solution

(a) The student:

- attaches the spring to a clamp, as shown in Fig. 1.1

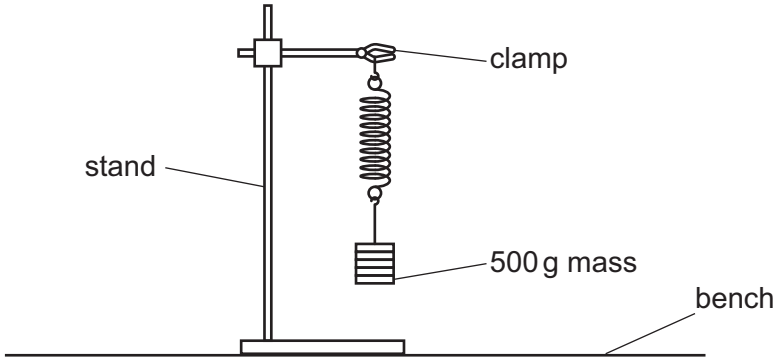

Fig. 1.1

- suspends a mass m = 500 g from the spring
- pulls the mass down a small distance and releases it.

The mass oscillates up and down.

(i) The student measures the time t taken for 20 oscillations of the mass.

The reading on the stop-watch is shown in Fig. 1.2.

Record t in Table 1.1.



Fig. 1.2

© UCLES 2024

Table 1.1

m/g	t/s	T/s
500		

[1]

(ii) The period T of the oscillations is the time taken for **one** oscillation.

Calculate the period T of the oscillations.

Record your answer in Table 1.1. [1]

View solution

(b) Suggest how the procedure can be improved to increase the accuracy of the result.

.....

..... [1]

View solution

(c) Calculate a value k_1 for the spring constant of the spring.

Use the equation shown.

$$k_1 = \frac{19.7}{T^2}$$

k_1 = ... N/m [1]

View solution

Method 2

(d) The student measures the stretched length l of the spring, with the 500 g mass still attached, in centimetres to the nearest 0.1 cm.
Fig. 1.3 shows the stretched spring drawn to a scale of one-quarter full size.

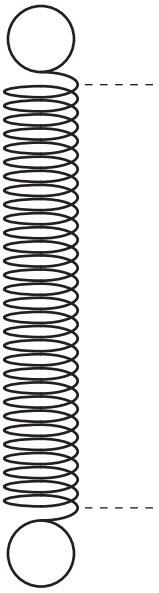

Fig. 1.3

© UCLES 2024

(i) The length L of the spring is the distance between the dotted lines in Fig. 1.3.

View solution

Measure L.

L = ... cm [1]

(ii) Calculate the actual stretched length l of the spring.

View solution

l = ... cm

Record l in Table 1.2.

Table 1.2

m/g	l/cm
500	
400	18.3
300	14.3
200	10.0
100	6.1

[1]

(e) The student removes the 100 g masses from the mass hanger, one at a time, and repeats the procedure for masses of m = 400 g, 300 g, 200 g and 100 g.

The student records each value of l in Table 1.2.

© UCLES 2024

(i) Plot a graph of l/cm (y-axis) against m/g (x-axis). Start your axes at the origin (0, 0).

View solution

Draw the best-fit line.

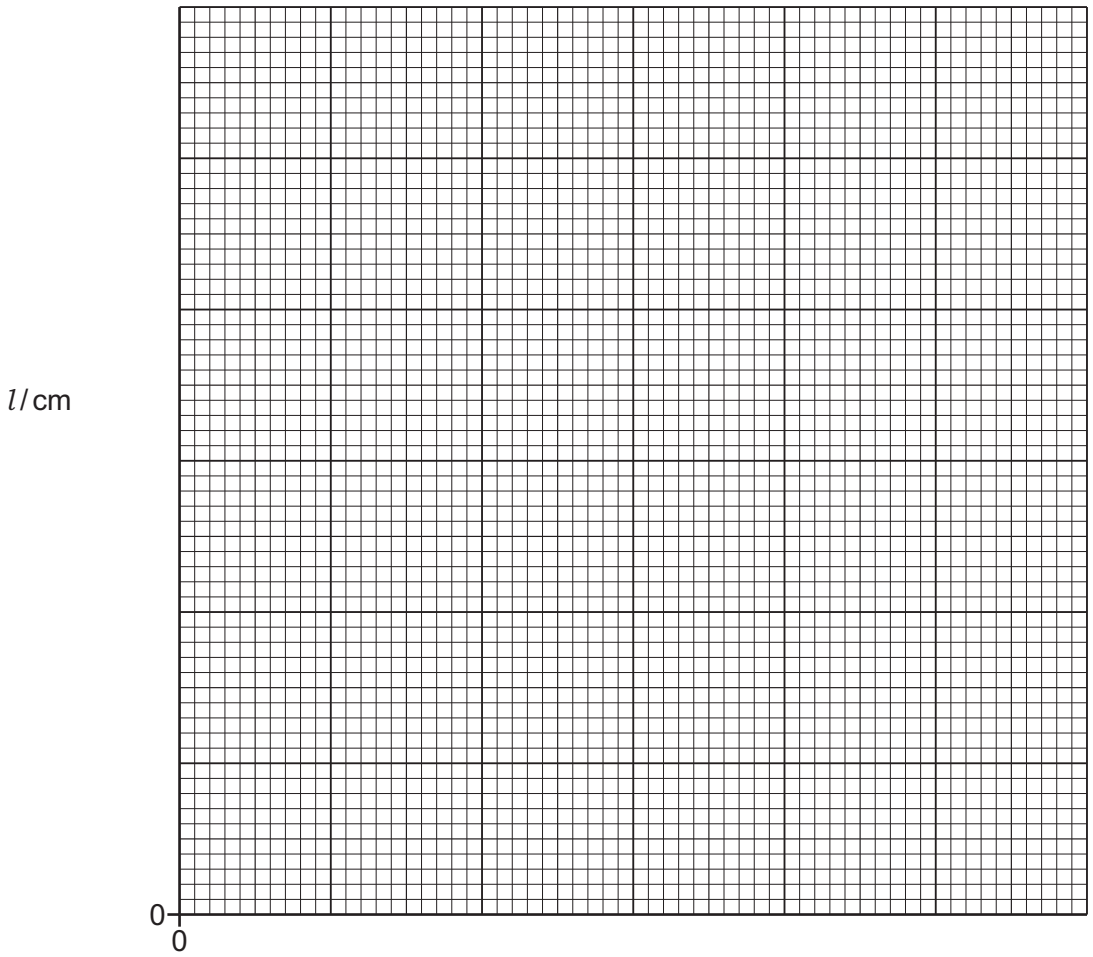

[3]

(ii) Calculate the gradient G of your line. Show all your working and indicate on the graph the values you use.

View solution

G = ... [1]

(iii) An estimated value k_2 for the spring constant of the spring can be calculated using the equation

$$k_2 = \frac{1}{G}.$$

View solution

Calculate k_2 using your value of G from **(e)(ii)** and the equation shown.

k_2 = ... N/m [1]

© UCLES 2024

(f) Two quantities can be considered to be equal within the limits of experimental accuracy if their values are within 10% of each other.

View solution

Compare your values of k_1 from **(c)** and k_2 from **(e)(iii)**.

State whether your results indicate that the values can be considered to be equal.

Support your statement with a calculation.

.....

.....

[2]

[Total: 13]

2 A student investigates the resistance R of a diode using the circuit shown in Fig. 2.1.

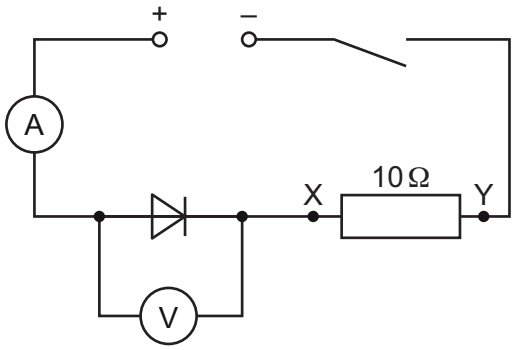

Fig. 2.1

View solution

(a) The student:

- closes the switch
- records the voltmeter reading V
- records the ammeter reading I
- opens the switch.

Fig. 2.2 shows the readings on the voltmeter and the ammeter.

Record the readings on the voltmeter and the ammeter in the first row of Table 2.1.

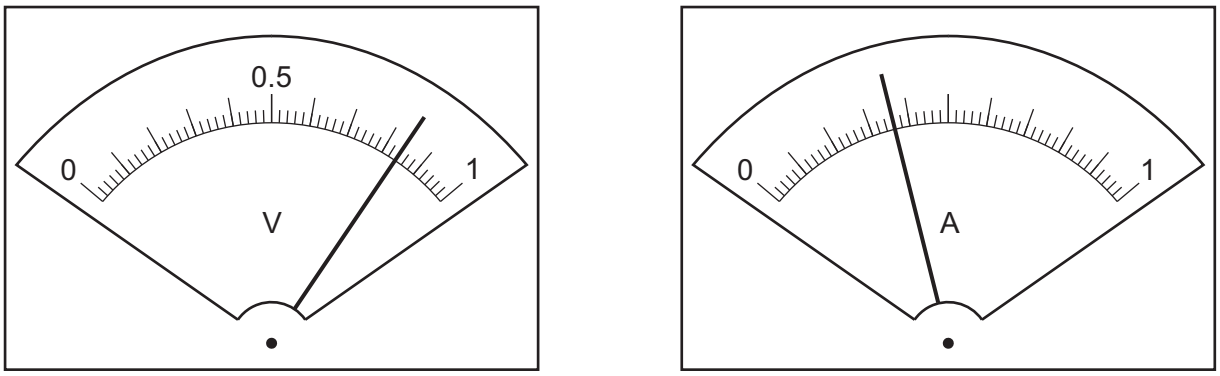

Fig. 2.2

Table 2.1

resistance between X and Y / Ω	V / V	I / A	R / Ω
10			
13	0.83	0.27	
20	0.81		4.5

[2]

(b) Calculate the resistance R of the diode using your meter readings from **(a)**.

View solution

Use the equation $R = \frac{V}{I}$.

Record your answer in the first row of Table 2.1 to an appropriate number of significant figures.

[2]

(c) The student:

- connects a 3 Ω resistor in series with the 10 Ω resistor between terminals X and Y, as shown in Fig. 2.3, and repeats the procedure in **(a)**

View solution

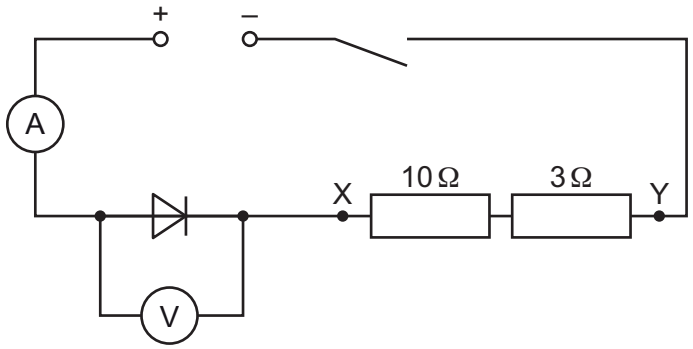

Fig. 2.3

- connects the 7 Ω, 10 Ω and 3 Ω resistors in series between X and Y, as shown in Fig. 2.4, and repeats the procedure in **(a)**.

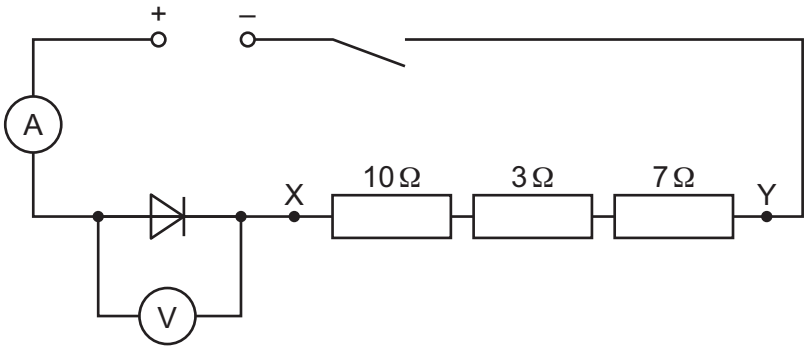

Fig. 2.4

© UCLES 2024

Table 2.1 is incomplete.

Complete Table 2.1 by adding the missing values of R and I. [2]

(d) As the resistance between terminals X and Y is increased, the current in the circuit changes.

Use your results in Table 2.1 to state the relationship between the current in the circuit and:

(i) the potential difference (p.d.) V across the diode

View solution

.....

..... [1]

(ii) the resistance R of the diode.

View solution

.....

..... [1]

(e) A student attempts to set up the circuit shown in Fig. 2.1. The student finds that the ammeter does **not** give a reading when the circuit is complete. The ammeter is **not** broken.

Suggest what the student may have done incorrectly while setting up the circuit.

View solution

..... [1]

(f) Name a single device that can be used to control the current in the circuit instead of adding extra resistors in series.

Draw the electrical symbol for the device.

View solution

name of device .....

electrical symbol

[1]

[Total: 10]

3 A student investigates the deviation of a ray of light passing through a transparent block **ABCD** and measures a quantity called the refractive index *n* of the block.

View solution

(a) The student's ray-trace sheet is shown full size in Fig. 3.1.

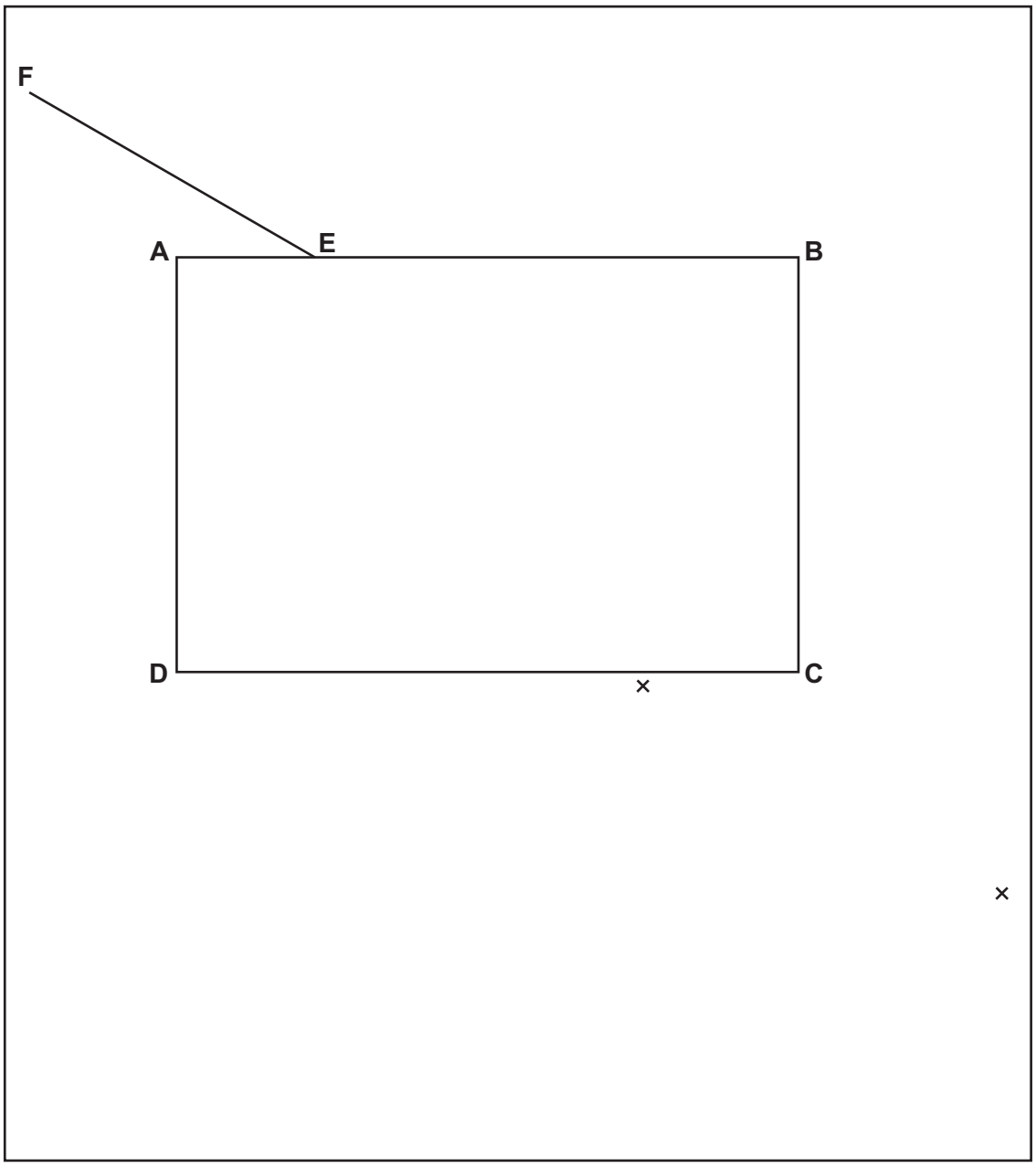

Fig. 3.1

(i) On Fig. 3.1, draw a normal at the point **E**. Extend the normal above **AB** and below **CD**. Label the upper end of the normal with the letter **N**, the lower end of the normal with the letter **M** and the point where the normal crosses side **CD** of the block with the letter **G**. [1]

(ii) Measure the angle θ between the lines **FE** and **EN**.

View solution

θ = ... ° [1]

(b) The student:

- positions an illuminated slit on the ray-trace sheet so that a ray of light passes along the line **FE** towards **E**
- marks and labels with small crosses (×) two points on the ray that leaves side **CD** of the block
- removes the transparent block.

View solution

On Fig. 3.1:

- extend the line **FE** until it meets the right-hand edge of the ray-trace sheet
- label the end of this line **Z**
- draw a straight line through the two crosses to meet side **CD** of the block
- label the point where the line meets **CD** with the letter **H**
- label the other end of the line with the letter **J**
- draw a straight line from **E** to **H**.

[1]

(c) **(i)** Measure the length l of **EH**.

View solution

l = ... cm [1]

(ii) Measure the perpendicular distance d between the line **HJ** and the line **FZ**.

View solution

d = ... cm [1]

(iii) Calculate $\frac{d}{l}$.

View solution

$\frac{d}{l}$ = ... [1]

(d) The measurement of a quantity is reproducible if a similar result is obtained when the measurement is repeated by a different method or under different conditions.

Suggest how the student can adapt this experiment to check if the value of $\frac{d}{l}$ is reproducible.

.....

.....

..... [1]

(e) Suggest **one** source of inaccuracy in this experiment, even if it is carried out very carefully.

.....

..... [1]

View solution

© UCLES 2024

(f) **(i)** Measure the length *L* of **GH**.

View solution

L = ... cm [1]

(ii) Use your value of l from **(c)(i)** and *L* from **(f)(i)** to calculate a value *n* for the refractive index of the block. Use the equation shown.

View solution

$$n = 0.866 \times \frac{l}{L}$$

n = ... [1]

[Total: 10]

BLANK PAGE

© UCLES 2024

4 A student sets up a flexible track at the edge of a bench. The student investigates a metal ball as it rolls from rest down the track and travels through the air. The metal ball travels a horizontal distance *d* through the air and lands in a tray of sand placed on the floor.

View solution

Plan an experiment to investigate how **one** variable affects the size of this distance *d*.

The apparatus available includes:

- flexible track
- clamp, boss and stand to support the track
- selection of metal balls.

Fig. 4.1 shows how the flexible track is supported.

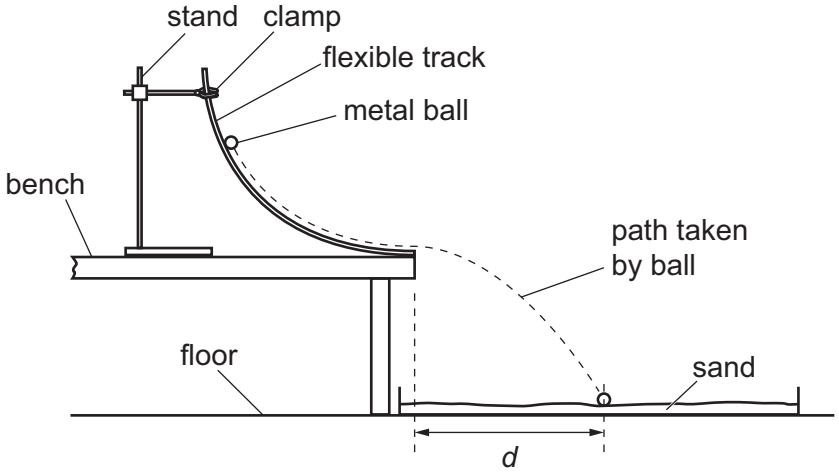

Fig. 4.1

In your plan:

- state the **one** variable you have chosen to investigate
- list any additional apparatus needed to measure this variable
- explain how to do the experiment
- state the key variables to be kept constant
- draw a table, with column headings, to show how to display the readings (you are **not** required to enter any readings in the table)
- explain how to use the readings to reach a conclusion.

© UCLES 2024

.....

.....

.....

.....

.....

.....

.....

.....

.....

.....

.....

.....

.....

.....

.....

.....

.....

.....

..... [7]

BLANK PAGE

Permission to reproduce items where third-party owned material protected by copyright is included has been sought and cleared where possible. Every reasonable effort has been made by the publisher (UCLES) to trace copyright holders, but if any items requiring clearance have unwittingly been included, the publisher will be pleased to make amends at the earliest possible opportunity.

To avoid the issue of disclosure of answer-related information to candidates, all copyright acknowledgements are reproduced online in the Cambridge Assessment International Education Copyright Acknowledgements Booklet. This is produced for each series of examinations and is freely available to download at www.cambridgeinternational.org after the live examination series.

Cambridge Assessment International Education is part of Cambridge Assessment. Cambridge Assessment is the brand name of the University of Cambridge Local Examinations Syndicate (UCLES), which is a department of the University of Cambridge.

© UCLES 2024