Cambridge Assessment International Education

Cambridge IGCSE™

CANDIDATE NAME									
CENTRE NUMBER						CANDIDATE NUMBER				

PHYSICS **0625/63**

Paper 6 Alternative to Practical **May/June 2024**

1 hour

You must answer on the question paper.

No additional materials are needed.

INSTRUCTIONS

- Answer **all** questions.
- Use a black or dark blue pen. You may use an HB pencil for any diagrams or graphs.
- Write your name, centre number and candidate number in the boxes at the top of the page.
- Write your answer to each question in the space provided.
- Do **not** use an erasable pen or correction fluid.
- Do **not** write on any bar codes.
- You may use a calculator.
- You should show all your working and use appropriate units.

INFORMATION

- The total mark for this paper is 40.
- The number of marks for each question or part question is shown in brackets [ ].

This document has **16** pages. Any blank pages are indicated.

© UCLES 2024

1 A student determines the density of modelling clay by two methods.

Method 1

He uses the block of modelling clay shown in Fig. 1.1.

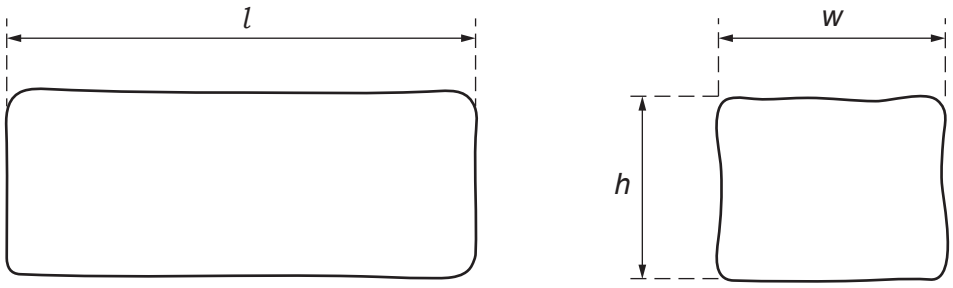

Fig. 1.1

(a) (i) Measure the dimensions of the block of modelling clay shown in Fig. 1.1. Record the values in centimetres to the nearest millimetre.

View solution

l = ... cm

w = ... cm

h = ... cm

[1]

(ii) Calculate the volume V_A of the block. Use your measurements from **(a)(i)** and the equation $V_A = l \times w \times h$.

View solution

V_A = ... cm^3 [1]

(b) Suggest why the value of V_A is only an approximation of the volume of the block.

View solution

Describe how the accuracy of V_A can be improved.

suggestion .....

.....

improvement .....

.....

.....

[2]

(c) Record the mass m_A of the block shown on the top-pan balance in Fig. 1.2.

m_A = ... g

View solution

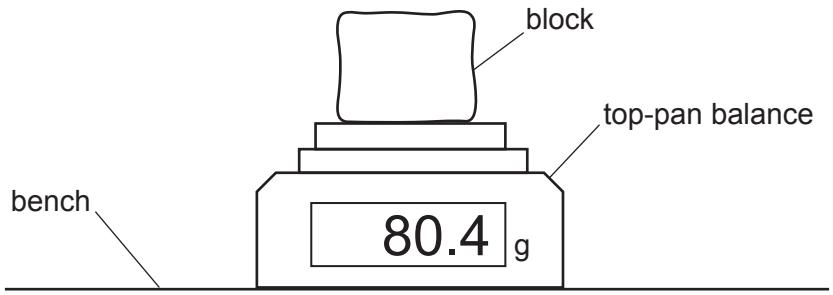

Fig. 1.2

Calculate a value ρ_A for the density of the modelling clay. Use your results from **(a)(ii)** and **(c)** and the equation $\rho_A = \frac{m_A}{V_A}$. Include the unit for the density.

ρ_A = ...

[2]

Method 2

(d) The student then uses a smaller block of modelling clay.

View solution

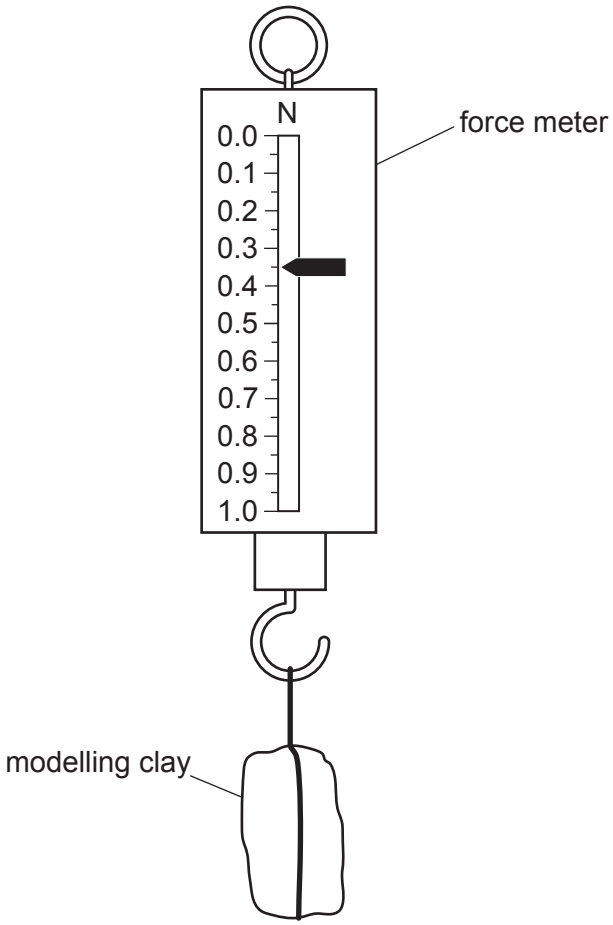

Fig. 1.3

Record the weight W_B of the block of modelling clay shown in Fig. 1.3.

W_B = ... N [1]

(e) (i) The student pours water into a measuring cylinder.

View solution

Record the volume V_1 of the water in the measuring cylinder shown in Fig. 1.4.

V_1 = ... cm^3 [1]

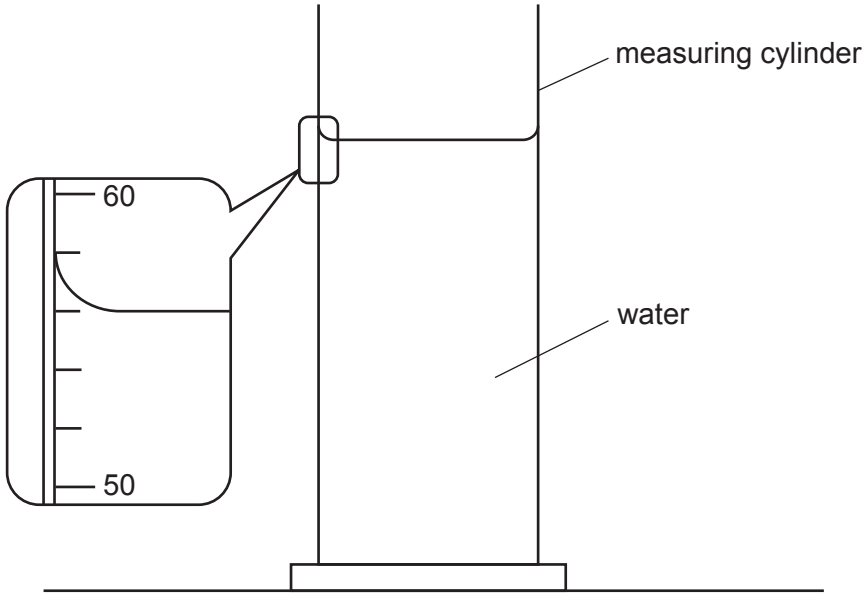

Fig. 1.4

(ii) Describe briefly how a measuring cylinder is read to obtain a value for the volume of water.

.....

.....

..... [1]

(f) **(i)** The student lowers the modelling clay into the water, as shown in Fig. 1.5.

View solution

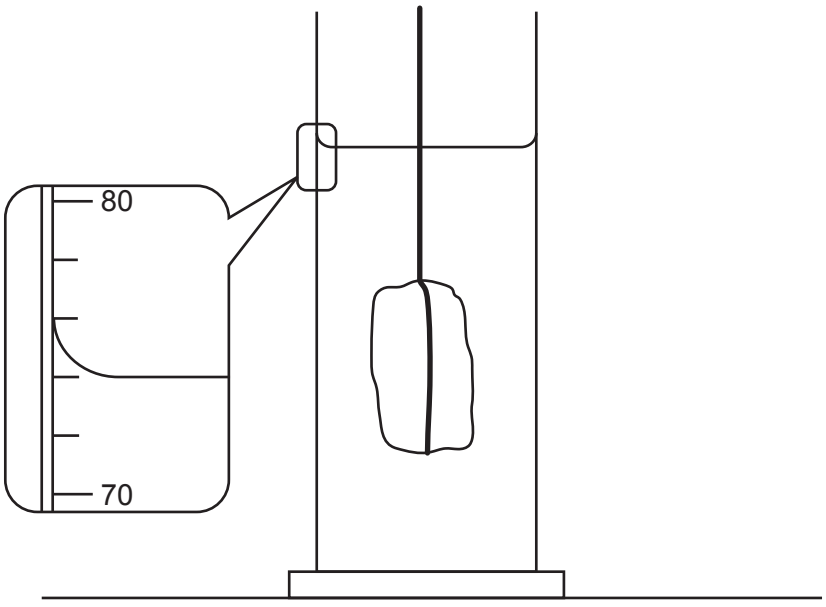

Fig. 1.5

Record the new reading V_2 of the measuring cylinder.

V_2 = ... cm^3

Calculate another value ρ_B for the density of modelling clay. Use your value for V_2, your readings from **(d)** and **(e)(i)** and the equation $\rho_B = \frac{W_B \times k}{(V_2 - V_1)}$, where $k = 100\,g/N$.

ρ_B = ...

[1]

(ii) Suggest which of ρ_A and ρ_B is likely to be the more accurate value.

View solution

Justify your answer by referring to method 1 and method 2.

.....

.....

..... [1]

[Total: 11]

2 A student investigates how the volume of water affects the rate at which water in a beaker cools.

She uses the apparatus shown in Fig. 2.1.

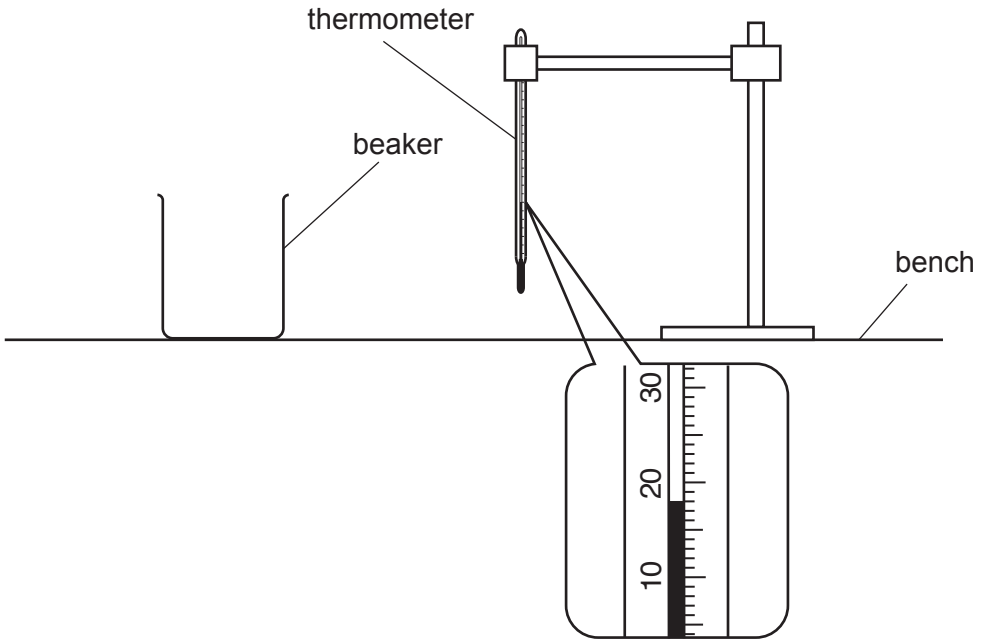

Fig. 2.1

(a) Record the room temperature θ_R shown on the thermometer in Fig. 2.1.

View solution

θ_R = ... [1]

(b) The student pours a volume of 200 cm^3 of hot water into the beaker and records the temperature θ of the water at time t = 0.

View solution

She records the temperature of the water in the beaker every 30 s.

She pours the water out and pours a volume of 75 cm^3 of hot water into the beaker.

The student repeats the temperature measurements for this volume of water.

© UCLES 2024

(i) Describe **two** precautions that can be taken to ensure that temperature readings in the experiment are as accurate as possible.

1 .....

.....

2 .....

.....

[2]

(ii) Her readings are shown in Table 2.1.

View solution

Add units to the column headings in Table 2.1.

Table 2.1

	beaker with 200 cm^3 of hot water	beaker with 75 cm^3 of hot water
t/	θ/	θ/
0	87.5	85.5
30	85.5	82.0
60	84.0	78.5
90	82.5	75.0
120	81.0	72.0
150	80.0	69.5
180	79.0	67.0

[1]

(c) Write a conclusion stating how the volume of water affects the rate of cooling of the water.

View solution

Justify your answer by reference to the results.

.....

.....

.....

..... [2]

(d) **(i)** Using the values for 75 cm^3 of water, calculate the average cooling rate x_1 for the first 90 s of the experiment. Use the readings from Table 2.1 and the equation

$$x_1 = \frac{\theta_0 - \theta_{90}}{T}$$

View solution

where T = 90 s and θ_0 and θ_{90} are the temperatures at t = 0 and t = 90 s.
Include the unit for the cooling rate.

x_1 = ...

Using the values for 75 cm^3 of water, calculate the average cooling rate x_2 for the last 90 s of the experiment. Use the readings from Table 2.1 and the equation

$$x_2 = \frac{\theta_{90} - \theta_{180}}{T}$$

where T = 90 s and θ_{90} and θ_{180} are the temperatures at t = 90 s and t = 180 s.

x_2 = ...
[2]

(ii) A student states that it is important to start the two experiments in **(b)** with water at the same initial temperature.

View solution

Explain whether your values for x_1 and x_2 support this statement.

.....

.....

..... [1]

(e) Another student repeats the experiment.

State **two** variables, other than initial water temperature, that he should control to obtain readings that are as close as possible to those in Table 2.1.

1 .....

.....

2 .....

.....
[2]

[Total: 11]

View solution

3 A student determines the focal length of a converging lens.

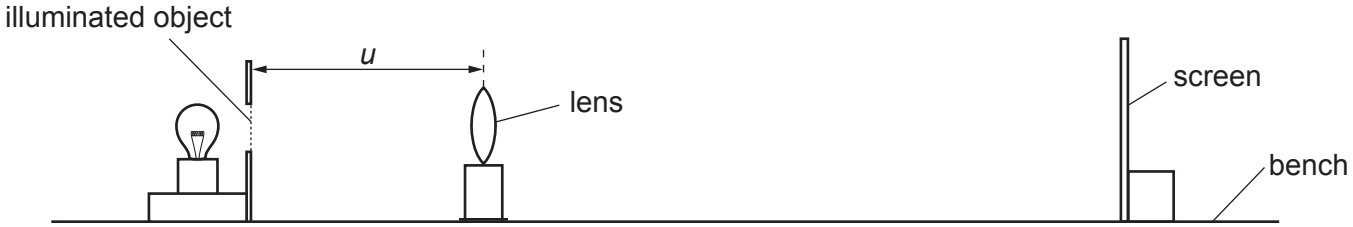

Fig. 3.1

(a) The student sets up the apparatus as shown in Fig. 3.1.

View solution

He sets the distance u between the illuminated object and the lens to 25.0 cm.

He places the screen near the lens and moves the screen until a focused image of the illuminated object is seen on the screen.

Describe a technique for obtaining an image that is as sharp as possible.

.....

.....

..... [1]

(b) The shapes of the illuminated object and the image seen on the screen are shown full size in Fig. 3.2 and Fig. 3.3.

View solution

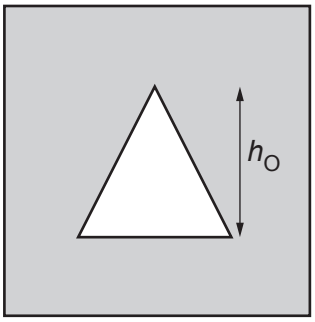

Fig. 3.2

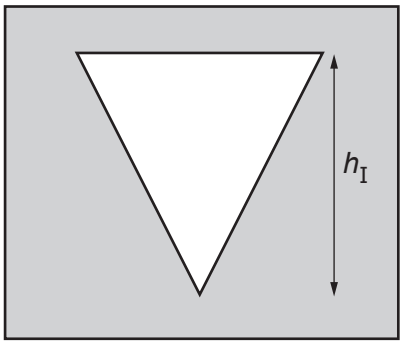

Fig. 3.3

(i) Measure h_O, the height of the illuminated object, as shown in Fig. 3.2.

h_O = ... cm

Measure h_I, the height of the image on the screen, as shown in Fig. 3.3.

h_I = ... cm
[2]

(ii) Calculate a value W using your measurements from **(b)(i)** and the equation $W = \frac{h_O}{h_I}$.

View solution

W = ... [1]

(c) The student repeats this procedure for u = 20.0 cm, 30.0 cm, 40.0 cm, 50.0 cm and 60.0 cm. His results are shown in Table 3.1.

View solution

Table 3.1

u / cm	h_I / cm	W
20.0	5.0	0.4
30.0	2.0	1.0
40.0	1.3	1.6
50.0	0.8	2.4
60.0	0.7	2.9

Plot a graph of u / cm (y-axis) against W (x-axis). Use the results from Table 3.1. You do **not** need to start your axes at the origin (0, 0). Draw the best-fit line.

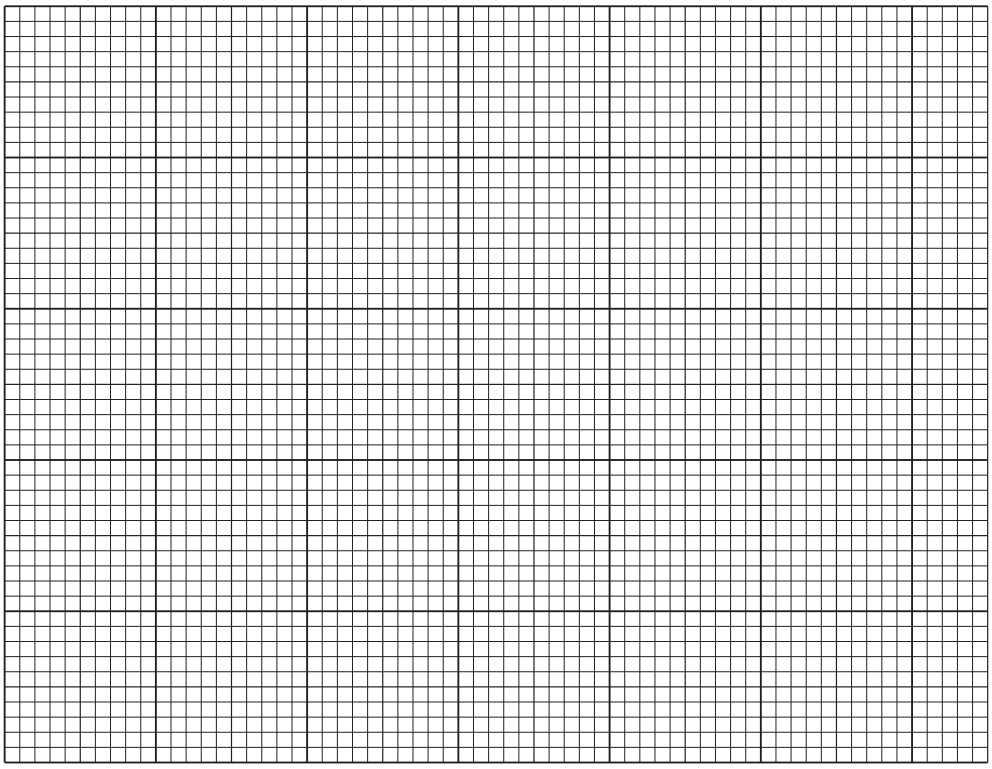

[4]

(d) (i) Determine the gradient G of the line. Show clearly on the graph how you obtained the necessary information.

View solution

G = ... [1]

(ii) The focal length f of the lens is numerically equal to the gradient G.

Record a value of f for this experiment.

View solution

f = ... cm [1]

(e) A student decides to continue the experiment using larger values of *u*.

Explain why this produces less accurate values for *W*.

View solution

.....

.....

..... [1]

[Total: 11]

BLANK PAGE

4 A student investigates the relationship between the diameter of a wire and the electrical resistance of the wire.

Plan an experiment which enables her to investigate how the diameter of a wire affects the resistance of the wire.

View solution

Resistance R is calculated from the equation $R = \frac{V}{I}$

where V is the potential difference (p.d.) across the wire and I is the current in the wire.

The apparatus available includes wires of different known diameters.

In your plan:

- list any additional apparatus needed
- complete Fig. 4.1 to show a circuit suitable for measuring the resistance of a wire
- explain briefly how to do the experiment, including the measurements to take so that the resistance can be determined
- state the key variables to keep constant
- draw a table, or tables, with column headings, to show how to display the readings (you are **not** required to enter any readings in the table)
- explain how to use the readings to reach a conclusion.

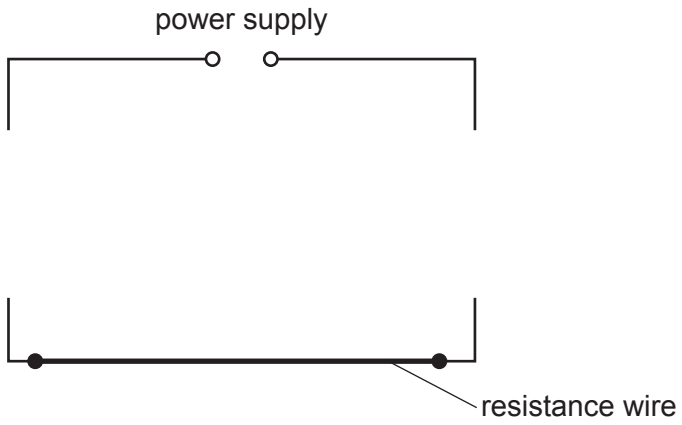

Fig. 4.1

© UCLES 2024

.....

.....

.....

.....

.....

.....

.....

.....

.....

.....

.....

.....

.....

.....

.....

.....

.....

..... [7]

BLANK PAGE

Permission to reproduce items where third-party owned material protected by copyright is included has been sought and cleared where possible. Every reasonable effort has been made by the publisher (UCLES) to trace copyright holders, but if any items requiring clearance have unwittingly been included, the publisher will be pleased to make amends at the earliest possible opportunity.

To avoid the issue of disclosure of answer-related information to candidates, all copyright acknowledgements are reproduced online in the Cambridge Assessment International Education Copyright Acknowledgements Booklet. This is produced for each series of examinations and is freely available to download at www.cambridgeinternational.org after the live examination series.

Cambridge Assessment International Education is part of Cambridge Assessment. Cambridge Assessment is the brand name of the University of Cambridge Local Examinations Syndicate (UCLES), which is a department of the University of Cambridge.

© UCLES 2024