Cambridge Assessment International Education

Cambridge IGCSE™

PHYSICS **0625/12**

Paper 1 Multiple Choice (Core) **May/June 2025**

45 minutes

You must answer on the multiple choice answer sheet.

You will need: Multiple choice answer sheet
Soft clean eraser
Soft pencil (type B or HB is recommended)

INSTRUCTIONS

- There are **forty** questions on this paper. Answer **all** questions.
- For each question there are four possible answers **A**, **B**, **C** and **D**. Choose the **one** you consider correct and record your choice in soft pencil on the multiple choice answer sheet.
- Follow the instructions on the multiple choice answer sheet.
- Write in soft pencil.
- Write your name, centre number and candidate number on the multiple choice answer sheet in the spaces provided unless this has been done for you.
- Do **not** use correction fluid.
- Do **not** write on any bar codes.
- You may use a calculator.
- Take the weight of 1.0 kg to be 9.8 N (acceleration of free fall = 9.8 m / s^2).

INFORMATION

- The total mark for this paper is 40.
- Each correct answer will score one mark.
- Any rough working should be done on this question paper.

This document has **16** pages. Any blank pages are indicated.

© UCLES 2025

1 A pendulum starts swinging and its motion is timed. The time measured for 20 complete swings is 30 s.

View solution

What is the time for **one** complete swing of the pendulum?

A 0.67 s **B** 0.75 s **C** 1.5 s **D** 3.0 s

2 Which piece of apparatus is used to determine the volume of an irregularly shaped solid?

View solution

A balance

B measuring cylinder

C ruler

D thermometer

3 A speed–time graph is plotted for the motion of a car.

View solution

Which quantity does the area under the speed–time graph represent?

A acceleration of the car

B average speed of the car

C distance travelled by the car

D final velocity of the car

4 Which quantity is an example of a force?

View solution

A density

B mass

C volume

D weight

5 Four hollow glass balls, P, Q, R and S, each have a volume of 30 cm^3.

View solution

The mass of each ball is shown.

ball	mass / g
P	15
Q	25
R	35
S	45

Which balls will float in a liquid of density 0.95 g / cm^3?

A P and Q **B** P only **C** R and S **D** S only

© UCLES 2025

6 A car travels at constant speed along a straight road that has a slight downwards slope.

View solution

Which statement is correct?

A There is a resultant force on the car down the slope.

B There is a resultant force on the car up the slope.

C There is a resultant force on the car vertically downwards.

D There is no resultant force on the car.

7 A torque wrench is a tool that ensures nuts or bolts are tightened to the required amount.

View solution

A mechanic sets the torque wrench to produce a moment of 50 N m.

The torque wrench has a length from the centre of the bolt to the handle of 600 mm.

What is the smallest force the mechanic needs to apply to tighten the bolt correctly?

A 0.080 N **B** 30 N **C** 83 N **D** 30 kN

8 The work done W by a force is related to the magnitude F of the force and the distance d moved in the direction of the force.

View solution

Which equation for W is correct?

A $W = d \div F$ **B** $W = d + F$ **C** $W = F \div d$ **D** $W = F \times d$

9 Which energy resource requires a power station with a boiler to produce steam when generating electricity?

View solution

A coal

B tides

C water behind a dam

D wind

10 A scientist heats a solid substance until it turns into a liquid, and then into a gas.

View solution

Which row describes the two changes of state of the substance as it is heated?

	change of state 1	change of state 2
A	freezing	condensing
B	freezing	boiling
C	melting	condensing
D	melting	boiling

© UCLES 2025

11 Gases can be compressed, but liquids cannot be compressed.

View solution

Which statement explains this difference?

A Each particle in a gas is more compressible than each particle in a liquid.

B Particles in a gas are further apart than particles in a liquid.

C Particles in a gas attract each other more strongly than particles in a liquid.

D Particles in a gas move more slowly than particles in a liquid.

12 A fixed mass of gas at a constant temperature is trapped in a cylinder which has a movable piston.

Which row states and explains what happens to the pressure of the gas in the cylinder when the volume of the gas increases?

View solution

	pressure	explanation
A	decreases	gas particles collide with the cylinder at a lower speed
B	decreases	gas particles collide with the cylinder less frequently
C	increases	gas particles collide with the cylinder at a higher speed
D	increases	gas particles collide with the cylinder more frequently

13 Which quantity does **not** change when there is an increase in temperature?

View solution

A the density of a steel block

B the diameter of the hole in a metal nut

C the length of an iron rod

D the mass of a metal coin

14 A person holds an empty glass beaker and pours hot water into it.

View solution

Why does it take a few seconds before his hand starts to feel hot?

A Glass is a poor thermal conductor.

B Water is a poor thermal conductor.

C Glass is a better thermal conductor than water.

D Water is a better thermal conductor than glass.

© UCLES 2025

15 A liquid is heated and it expands.

View solution

How does this lead to the formation of a convection current?

A The density of the heated liquid decreases.

B The density of the heated liquid increases.

C The mass of the heated liquid particles decreases.

D The mass of the heated liquid particles increases.

16 Some electric hotplates are metal and do **not** glow when hot.

View solution

Other hotplates are glass and have a heater underneath that glows red. The heater makes the glass hot.

With both hotplates, there is no air gap between the hotplate and a metal pan placed on the hotplate.

Which statement is correct?

A The glass hotplate transfers less energy by radiation to the base of the pan than the metal hotplate.

B The glass hotplate transfers energy by convection to the base of the pan.

C The metal hotplate transfers energy by conduction to the base of the pan.

D The metal hotplate transfers energy by convection to the base of the pan.

17 Twelve crests of a water wave pass a boat anchored at sea in a time of 180 s.

View solution

The distance between consecutive crests of the wave is 10 m.

What is the speed of the wave?

A 0.056 m / s **B** 0.67 m / s **C** 15 m / s **D** 18 m / s

© UCLES 2025

18 The diagrams show examples of wave motion.

View solution

waves on water

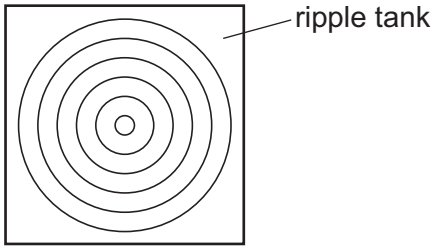

1

waves in air

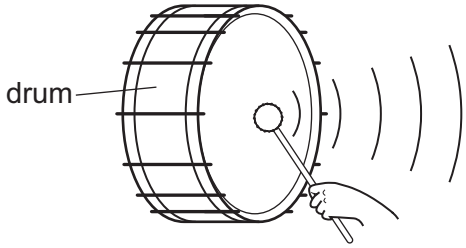

2

waves on a rope

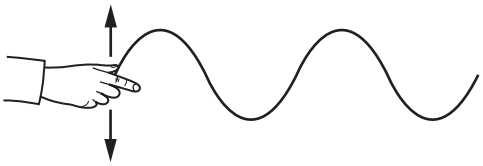

3

waves in a spring



4

Which waves are longitudinal?

A 1 only **B** 2, 3 and 4 **C** 2 and 3 only **D** 2 and 4 only

19 A ray of light passes through a glass block.

View solution

What is the path of the light?

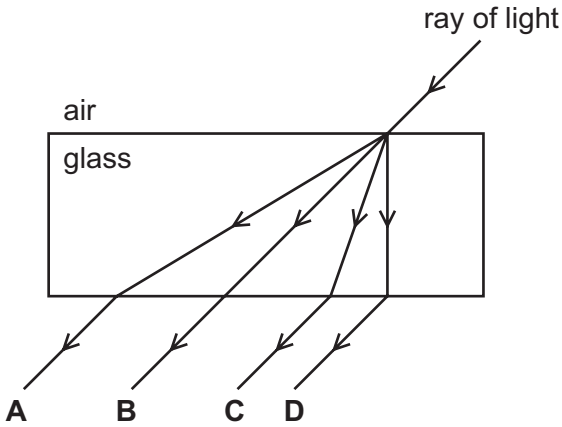

© UCLES 2025

20 The diagram shows a converging lens forming an image.

View solution

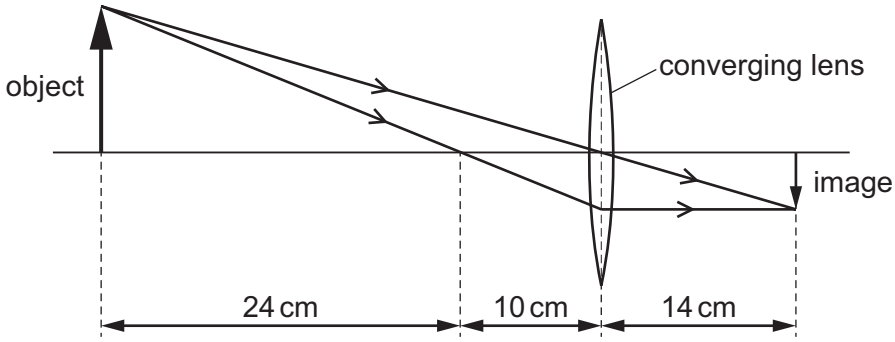

not to scale

What is the focal length of the converging lens?

A 10 cm **B** 14 cm **C** 24 cm **D** 34 cm

21 Which type of radiation does a remote controller use to send its instructions to a television (TV)?

View solution

A gamma rays

B infrared radiation

C ultraviolet radiation

D X-rays

22 A person exposed to excessive radiation from certain parts of the electromagnetic spectrum is likely to suffer cell damage.

View solution

Which radiations cause cell damage?

A gamma rays and ultraviolet

B gamma rays only

C green light and red light

D radio waves and green light

© UCLES 2025

23 The diagram shows the ranges of human hearing and of ultrasound waves.

View solution

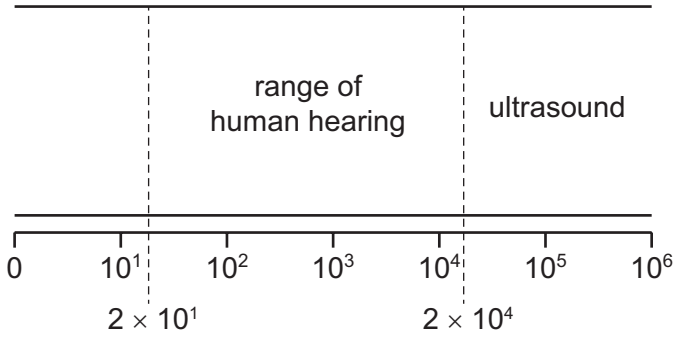

Which characteristic of sound waves do the numbers on the diagram refer to?

A amplitude in cm

B frequency in Hz

C speed in metres / second

D wavelength in metres

24 A student has a bar magnet and two metal blocks.

View solution

The student places the bar magnet next to end W and end X of metal block 1.

The student then places the bar magnet next to end Y and end Z of metal block 2.

The diagram shows which ends of the metal blocks are attracted or repelled by the bar magnet.

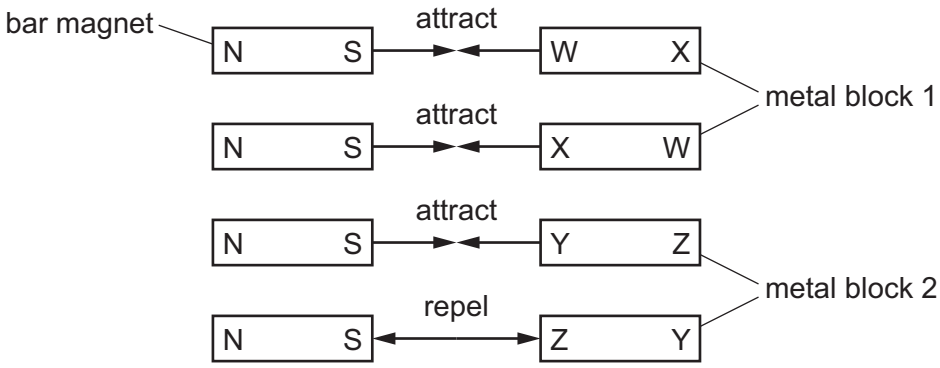

Which metal blocks are bar magnets?

A both metal block 1 and metal block 2

B metal block 1 only

C metal block 2 only

D neither metal block 1 nor metal block 2

© UCLES 2025

25 A glass rod is rubbed with a silk cloth. The glass rod becomes positively charged.

View solution

Which statement explains how this happens?

A Negative charges move from the glass rod to the silk cloth.

B Negative charges move from the silk cloth to the glass rod.

C Positive charges move from the glass rod to the silk cloth.

D Positive charges move from the silk cloth to the glass rod.

26 Which statement describes what is happening when there is an electric current in a metal wire?

View solution

A Electrons in the wire vibrate.

B Electrons move along the wire.

C Positive charges in the wire vibrate.

D Positive charges move along the wire.

27 Which **two** electrical quantities have the same unit?

View solution

A current and charge

B electromotive force (e.m.f.) and potential difference (p.d.)

C potential difference (p.d.) and current

D resistance and electromotive force (e.m.f.)

28 A 10 V d.c. power supply is connected across a resistor.

View solution

The current in the resistor is 0.050 A.

What is the resistance of the resistor?

A 0.0050 Ω **B** 0.50 Ω **C** 2.0 Ω **D** 200 Ω

© UCLES 2025

29 A resistor and a thermistor are connected in a series circuit, as shown.

View solution

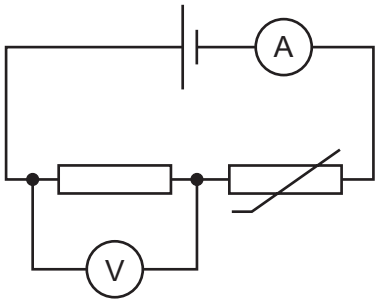

What happens to the readings on the ammeter and the voltmeter when the thermistor is heated?

	ammeter reading	voltmeter reading
A	decreases	decreases
B	decreases	increases
C	increases	decreases
D	increases	increases

30 In which circuit does the ammeter read 2.0 A?

View solution

A

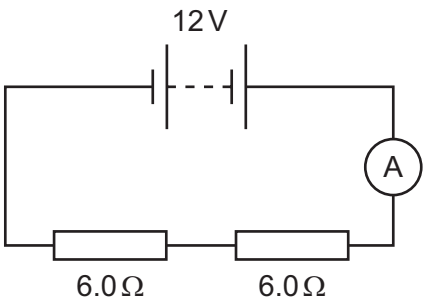

B

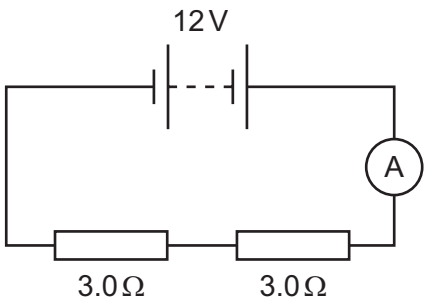

C

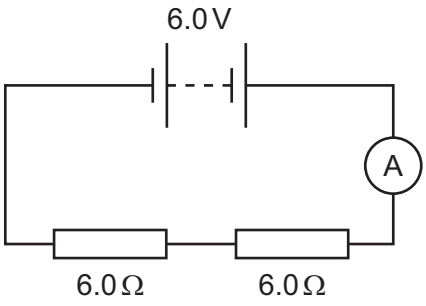

D

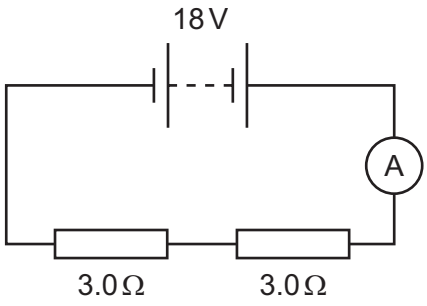

31 A 240 V mains-powered vacuum cleaner has a power output of 2700 W.

View solution

Which fuse is suitable for use in the plug of the vacuum cleaner?

A 3 A **B** 5 A **C** 10 A **D** 13 A

© UCLES 2025

32 The transformer in a laptop power supply is used to change mains voltage from 240 V to 20 V.

View solution

The transformer has 600 turns on the secondary coil.

Which type of transformer is it and how many turns does the transformer have on the primary coil?

	transformer type	number of turns on primary coil
A	step-down	50
B	step-down	7200
C	step-up	50
D	step-up	7200

33 An ion of the element oxygen is negatively charged.

View solution

Which change causes the ion to become a neutral oxygen atom?

A gain of electrons

B gain of protons

C loss of electrons

D loss of protons

34 A nuclide of nitrogen is represented as $^{15}_{7}\mathrm{N}$.

View solution

What is the number of neutrons in this nuclide?

A 7 **B** 8 **C** 15 **D** 22

35 Which list **only** includes sources of naturally occurring background radiation?

View solution

A cosmic rays, radon gas, nuclear power stations

B food and drink, mobile phones, cosmic rays

C rocks and buildings, food and drink, radon gas

D rocks and buildings, mobile phones, nuclear power stations

© UCLES 2025

36 A student compares alpha emissions, beta emissions and gamma emissions.

View solution

Which statement is correct?

A Alpha emissions are the most ionising.

B Beta emissions are the most penetrating.

C Beta emissions are part of the electromagnetic spectrum.

D Gamma emissions are streams of charged particles.

37 In school laboratories, radioactive sources are stored in lead-lined boxes.

View solution

Why is lead used?

A Lead neutralises radiation.

B Lead absorbs radiation.

C Lead repels radiation.

D Lead dissolves radiation.

38 The Sun, the Earth and the Moon are all bodies in the Solar System.

View solution

The Earth has a periodic cycle of day and night and a periodic cycle of seasons.

Which row relates the periods of these cycles to the motions of these bodies?

	period of day and night	period of the seasons
A	the Earth orbits the Sun	the Earth rotates about its axis
B	the Earth orbits the Sun	the Moon orbits the Earth
C	the Earth rotates about its axis	the Earth orbits the Sun
D	the Earth rotates about its axis	the Moon orbits the Earth

39 The strength of the gravitational field at the surface of a planet depends on the .....1..... .

View solution

The strength of the gravitational field .....2..... as the distance from the planet increases.

Which words correctly complete the sentences?

	1	2
A	atmospheric pressure	decreases
B	mass of the planet	decreases
C	atmospheric pressure	increases
D	mass of the planet	increases

© UCLES 2025

40 The Sun radiates most of its energy in three regions of the electromagnetic spectrum.

View solution

The diagram shows the proportion of the total energy radiated in each of these regions.

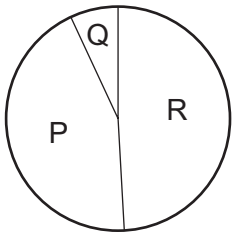

Region P is visible light and region Q is ultraviolet.

What is region R?

A infrared

B microwaves

C radio waves

D X-rays

© UCLES 2025

BLANK PAGE

BLANK PAGE

© UCLES 2025

BLANK PAGE

Permission to reproduce items where third-party owned material protected by copyright is included has been sought and cleared where possible. Every reasonable effort has been made by the publisher (UCLES) to trace copyright holders, but if any items requiring clearance have unwittingly been included, the publisher will be pleased to make amends at the earliest possible opportunity.

To avoid the issue of disclosure of answer-related information to candidates, all copyright acknowledgements are reproduced online in the Cambridge Assessment International Education Copyright Acknowledgements Booklet. This is produced for each series of examinations and is freely available to download at www.cambridgeinternational.org after the live examination series.

Cambridge Assessment International Education is part of Cambridge Assessment. Cambridge Assessment is the brand name of the University of Cambridge Local Examinations Syndicate (UCLES), which is a department of the University of Cambridge.

© UCLES 2025