Cambridge Assessment International Education

Cambridge IGCSE™

PHYSICS **0625/21**

Paper 2 Multiple Choice (Extended) **May/June 2025**

45 minutes

You must answer on the multiple choice answer sheet.

You will need: Multiple choice answer sheet
Soft clean eraser
Soft pencil (type B or HB is recommended)

INSTRUCTIONS

- There are **forty** questions on this paper. Answer **all** questions.
- For each question there are four possible answers **A**, **B**, **C** and **D**. Choose the **one** you consider correct and record your choice in soft pencil on the multiple choice answer sheet.
- Follow the instructions on the multiple choice answer sheet.
- Write in soft pencil.
- Write your name, centre number and candidate number on the multiple choice answer sheet in the spaces provided unless this has been done for you.
- Do **not** use correction fluid.
- Do **not** write on any bar codes.
- You may use a calculator.
- Take the weight of 1.0 kg to be 9.8 N (acceleration of free fall = 9.8 m / s^2).

INFORMATION

- The total mark for this paper is 40.
- Each correct answer will score one mark.
- Any rough working should be done on this question paper.

This document has **16** pages. Any blank pages are indicated.

© UCLES 2025

1 The speed–time graph for a racing car is divided into four sections, P, Q, R and S. The car starts the race but soon crashes into a wall of tyres.

View solution

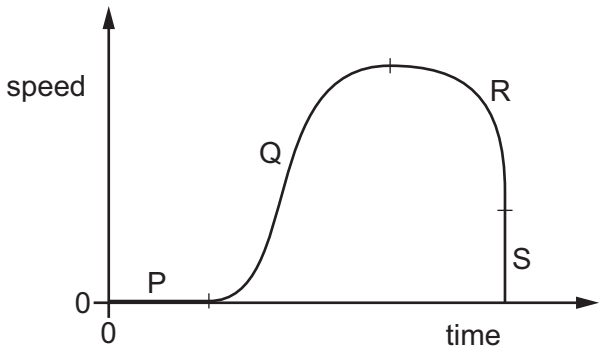

Which sections of the graph show that there is an acceleration that is changing?

A P, Q, R and S

B Q, R and S only

C Q and R only

D R and S only

2 The diagram shows the four forces acting on an aircraft in flight.

View solution

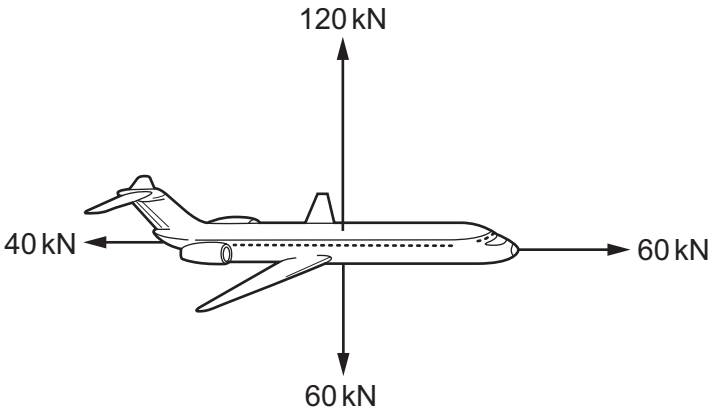

Which arrow shows the direction of the resultant of the four forces?

A **B** **C** **D**



3 The diagrams show two metal blocks, X and Y, suspended from identical force meters. X and Y have identical dimensions.

View solution

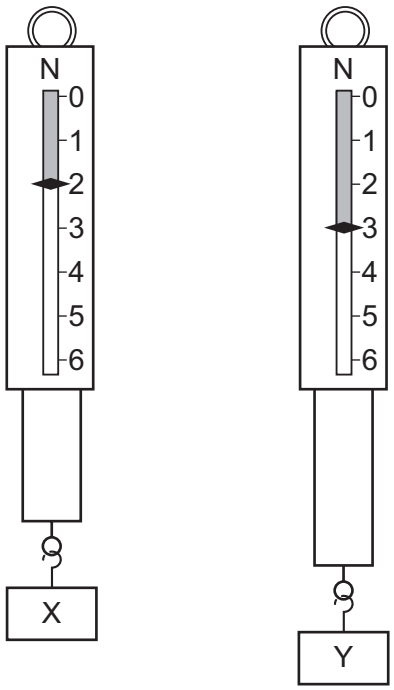

Which statement about X and Y is correct?

A They have different volumes and different weights.

B They have different volumes and equal weights.

C They have equal volumes and equal weights.

D They have equal volumes and different weights.

View solution

4 A girl has a gold necklace.

Which apparatus does she need to find the density of the gold?

	balance	measuring cylinder	thermometer	ruler
A	✓	✓	✓	✓
B	✓	✓	✓	✗
C	✓	✓	✗	✗
D	✓	✗	✗	✗

key

✓ = needed

✗ = **not** needed

View solution

5 A spring has a length of 25 cm when a load of 2.0 N is suspended from it.

The spring has a length of 35 cm when a 7.0 N load is used.

What is the spring constant of the spring?

A 0.20 N / cm **B** 0.50 N / cm **C** 2.0 N / cm **D** 5.0 N / cm

© UCLES 2025

6 The diagrams E–H show a block of wood on a frictionless surface. In each diagram, the block has two forces acting on its sides.

View solution

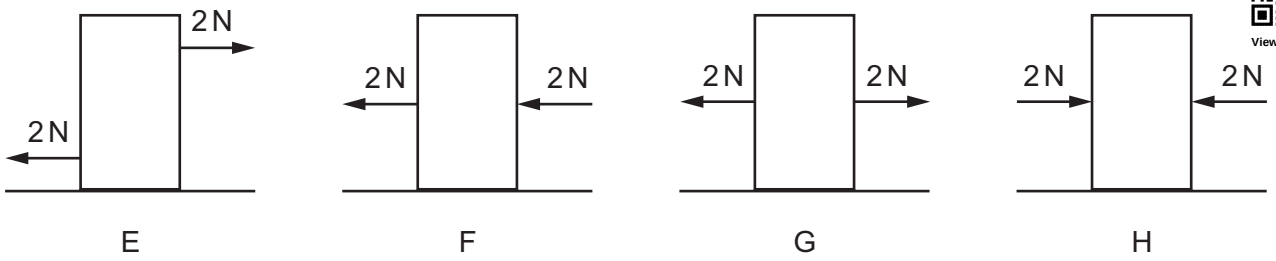

Which diagrams show the block in equilibrium?

A E, F, G and H

B E, G and H only

C E and F only

D G and H only

7 Which statement is **not** correct?

View solution

A the momentum of a system is conserved in all interactions

B impulse = change of momentum

C force acting = change of momentum × time

D momentum = mass × velocity

8 A force acting on a moving ball causes its motion to change. This force stays constant.

View solution

What makes the force produce a greater change in the motion of the ball?

A decreasing the total mass of the ball

B increasing the temperature of the ball

C using a ball with a hollow centre but the same mass

D using a different material for the ball so that it has a lower density but the same mass

© UCLES 2025

9 A farmer has two carts. The carts have the same weight, but one has four narrow wheels and the other has four wide wheels.

View solution

narrow wheel

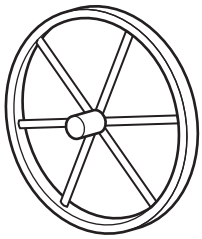

wide wheel

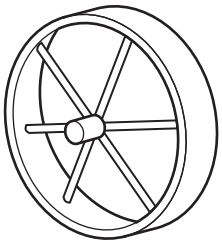

Which cart wheels sink less into soft ground and what is the reason?

	cart wheels	reason
A	narrow	greater pressure on the ground
B	narrow	less pressure on the ground
C	wide	greater pressure on the ground
D	wide	less pressure on the ground

10 A hot gas and a cool liquid are at the same pressure.

View solution

Which row describes the separation and the motion of the particles of a hot gas compared to those of a cool liquid?

	separation of gas particles	motion of gas particles
A	greater than a cool liquid	faster than a cool liquid
B	greater than a cool liquid	slower than a cool liquid
C	less than a cool liquid	faster than a cool liquid
D	less than a cool liquid	slower than a cool liquid

11 A fixed mass of gas has a volume of $1.2\,m^3$ and is at a pressure of 200 kPa. The gas expands at constant temperature to a volume of $1.8\,m^3$.

View solution

What is the new pressure of the gas?

A 120 kPa **B** 130 kPa **C** 300 kPa **D** 600 kPa

© UCLES 2025

12 The specific heat capacity of solid P is greater than that of solid Q.

View solution

What does this statement mean?

A Less energy is needed to raise the temperature by 1 °C of unit mass of solid P than unit mass of solid Q.

B Less energy is needed to melt unit mass of solid P than unit mass of solid Q.

C More energy is needed to raise the temperature by 1 °C of unit mass of solid P than unit mass of solid Q.

D More energy is needed to melt unit mass of solid P than unit mass of solid Q.

13 When water evaporates, what escapes from the surface of the water?

View solution

A individual atoms

B individual molecules

C individual protons

D tiny drops of water

14 A sealed container of gas is heated. The pressure of the gas increases.

View solution

Which statement explains this increase in pressure?

A The forces of the gas particles striking the walls of the container increase.

B The forces of attraction between the gas particles and the walls of the container increase.

C The gas particles collide with each other more frequently.

D The gas particles lose more energy when they strike the walls of the container.

15 A student has a copper rod and a wooden rod. Both rods have the same dimensions.

View solution

The student puts one end of each rod into a beaker of crushed ice.

After a few minutes, the student picks up the rods by the ends **not** in the ice.

Which statement is correct?

A The copper rod feels colder than the wooden rod because copper is a better conductor than wood.

B The copper rod feels warmer than the wooden rod because copper is a better conductor than wood.

C The wooden rod feels colder than the copper rod because wood is a better conductor than copper.

D The wooden rod feels warmer than the copper rod because wood is a better conductor than copper.

© UCLES 2025

16 The diagram shows a black object X at constant temperature.

View solution

The arrows represent the absorption and emission of thermal radiation at the surface.

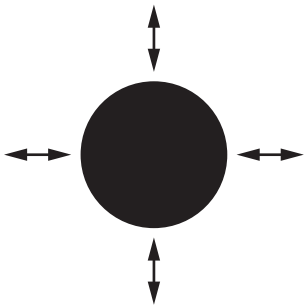

Object Y is at the same constant temperature as X and is identical except that it has a white surface.

Which row correctly compares object X with object Y?

	rate of absorption for X	rate of emission for X
A	higher	higher
B	lower	higher
C	higher	lower
D	lower	lower

© UCLES 2025

17 The diagram shows a cork with a weight attached so that the cork floats upright in water.

View solution

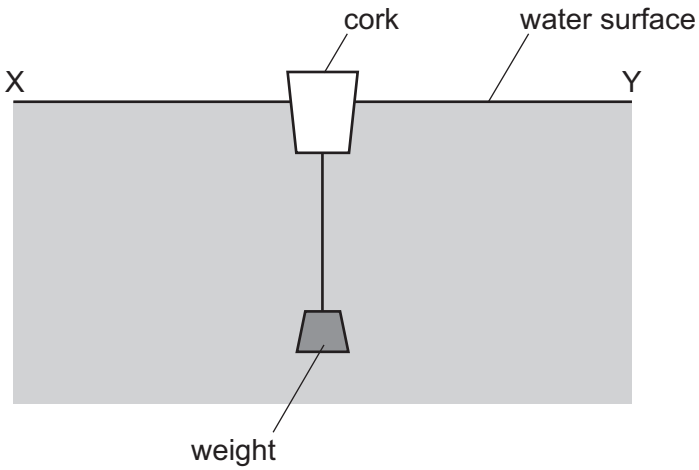

Transverse waves travel across the water from X to Y.

In which direction do the waves make the cork move?

A $\rightarrow \leftarrow$ right and left

B $\uparrow\downarrow$ up and down

C $\rightarrow$ only to the right

D $\leftarrow$ only to the left

18 A thin converging lens is used as a magnifying glass.

View solution

How does the image compare with the object?

A real and inverted

B real and upright

C virtual and inverted

D virtual and upright

© UCLES 2025

19 The diagram shows two plane mirrors at 90° to each other. A ray of light is incident on one of the mirrors. The ray reflects off both mirrors before reaching a screen.

View solution

At which labelled point does the ray reach the screen?

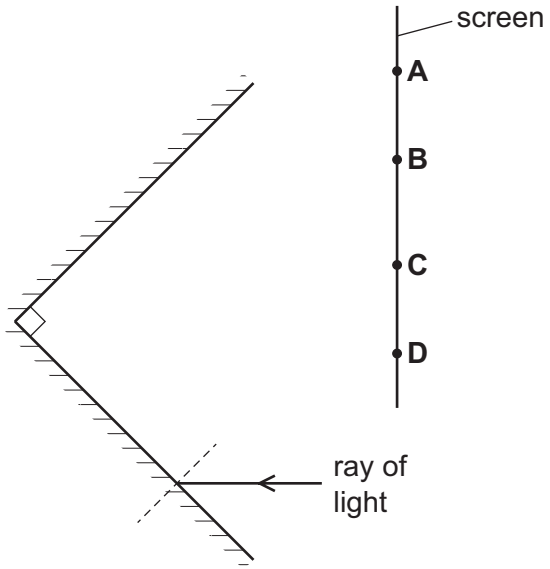

20 The speed of light in a material is 50% of the speed of light in air.

View solution

What is the refractive index of the material?

A 0.5 **B** 2.0 **C** 6.0×10^8 **D** 1.5×10^8

21 A beam of white light is split into a spectrum of seven colours.

View solution

Which name is given to this process?

A diffraction

B dispersion

C reflection

D refraction

22 Satellites are sometimes used to receive and re-transmit television signals.

View solution

Which row shows the type of satellite and the electromagnetic waves used?

	type of satellite	electromagnetic waves used
A	low orbit	infrared
B	low orbit	microwaves
C	geostationary	infrared
D	geostationary	microwaves

23 A sound wave travels through the air and strikes a solid block of steel.

View solution

Some of the sound is reflected from the steel, and some is transmitted through the steel.

How does the speed and the wavelength of the sound in steel compare to the speed and the wavelength of the sound in air?

	speed in steel	wavelength in steel
A	less than in air	less than in air
B	less than in air	greater than in air
C	greater than in air	less than in air
D	greater than in air	greater than in air

24 The diagram shows a bracelet containing two magnets. The arrows represent the pattern and the direction of the magnetic field due to the magnets.

View solution

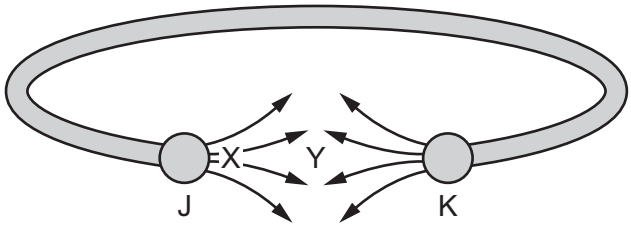

Which row identifies the magnetic pole at J, the magnetic pole at K and where the magnetic field is the strongest?

	magnetic pole at J	magnetic pole at K	where the magnetic field is the strongest
A	N	N	X
B	N	N	Y
C	S	S	X
D	S	S	Y

© UCLES 2025

25 Which row describes an electric field and its direction?

View solution

	description of electric field	direction of electric field
A	region in which an electric charge experiences a force	direction of the force on a positive charge
B	region in which an electric charge experiences a force	direction of the force on a negative charge
C	region in which an electric charge produces a current	direction of the force on a positive charge
D	region in which an electric charge produces a current	direction of the force on a negative charge

26 Copper wire is available in fixed lengths but in various diameters d. Each wire has a different resistance R.

View solution

Which relationship between R and d is correct?

A R is directly proportional to d.

B R is directly proportional to d^2.

C R is inversely proportional to d.

D R is inversely proportional to d^2.

27 The diagram shows three 20 Ω resistors, R_1, R_2 and R_3, and a switch S connected to a d.c. power supply.

View solution

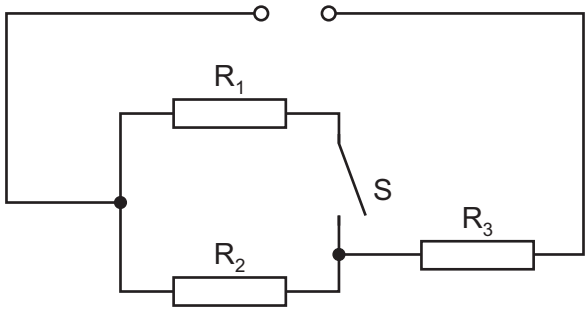

Switch S is open.

The potential difference (p.d.) across R_3 is 9.0 V.

What is the p.d. across R_3 when switch S is closed?

A 3.0 V **B** 6.0 V **C** 12 V **D** 27 V

28 The circuits shown all include a d.c. power supply, one diode and two light-emitting diodes (LEDs).

View solution

In which circuit will both LEDs be turned on?

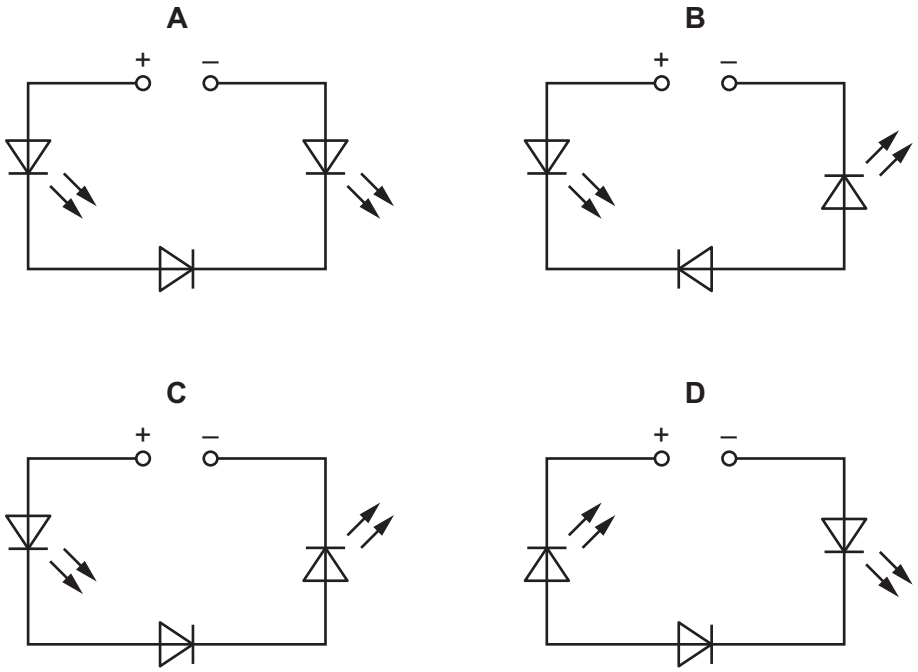

29 A wire connected to a resistor R is moved in a magnetic field. A current is induced in the direction shown.

View solution

In which direction is the wire moved?

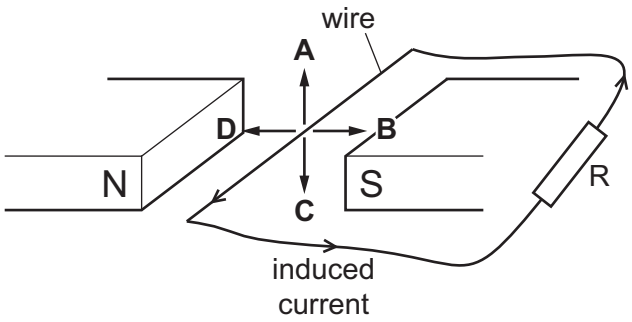

30 Which component is **not** found in an a.c. generator?

View solution

A coil of wire

B split-ring commutator

C magnetic poles

D slip rings

31 There is a current in a straight metal wire in the direction shown.

View solution

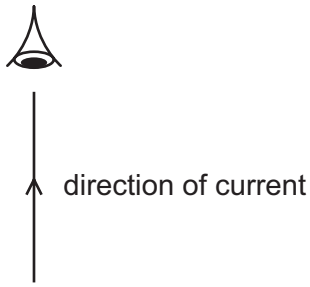

Which row describes the direction and the pattern of the magnetic field due to the wire when looking from vertically above the wire?

	direction	pattern
A	anticlockwise	circular
B	left to right	parallel lines
C	clockwise	circular
D	right to left	parallel lines

View solution

32 A simple transformer contains an iron core.

What is the function of the iron core in the transformer?

A to conduct current from the primary coil to the secondary coil

B to enable the secondary coil to act as an electromagnet

C to ensure there is a high voltage between the primary coil and the secondary coil

D to link the magnetic field in the primary coil to the secondary coil

33 In an alpha particle scattering experiment, a beam of alpha particles is fired at a very thin piece of gold foil.

View solution

In which direction do most of the alpha particles travel after hitting the foil?

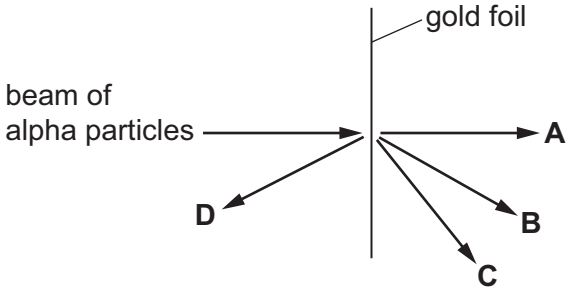

34 An atom of boron contains 5 protons and 5 electrons. The nucleon number of the atom is 11.

View solution

How many neutrons are there in the atom?

A 5 **B** 6 **C** 11 **D** 16

35 A detector placed near a radioactive isotope gives a measured count rate of 800 counts / minute. The half-life of the isotope is three hours.

View solution

The background count rate is 32 counts / minute.

What is the count rate on the detector after six hours?

A 192 counts / minute

B 200 counts / minute

C 224 counts / minute

D 232 counts / minute

36 Sodium-24 is a radioactive isotope that emits beta radiation.

View solution

Which nuclear equation shows how sodium-24 decays?

A $^{24}_{11}\text{Na} \rightarrow {}^{24}_{12}\text{Mg} + {}^{0}_{-1}\beta$

B $^{24}_{11}\text{Na} \rightarrow {}^{24}_{10}\text{Ne} + {}^{0}_{-1}\beta$

C $^{24}_{11}\text{Na} \rightarrow {}^{20}_{9}\text{F} + {}^{4}_{2}\beta$

D $^{24}_{11}\text{Na} \rightarrow {}^{20}_{13}\text{A}l + {}^{4}_{2}\beta$

37 Which safety precautions must be taken when using a source of gamma radiation?

View solution

1 Reduce the distance between the source and the person.

2 Reduce the time of exposure to the radiation.

3 Use a suitable shielding material between the source and the person.

A 1, 2 and 3 **B** 1 and 2 only **C** 1 and 3 only **D** 2 and 3 only

© UCLES 2025

38 A student defines three periods of time:

View solution

- the time T_S taken for the Earth to orbit the Sun
- the time T_R taken for the Earth to rotate once on its axis
- the time T_M taken for the Moon to orbit the Earth.

Which row shows the shortest period of time and the longest period of time?

	shortest period of time	longest period of time
A	T_S	T_R
B	T_R	T_S
C	T_R	T_M
D	T_M	T_S

39 Which statement about the Universe is correct?

View solution

A The Universe consists of 100 000 galaxies.

B Redshift is a decrease in the observed wavelength of electromagnetic radiation emitted from receding galaxies.

C Light emitted from distant galaxies appears redshifted.

D Redshift of the light from distant galaxies gives evidence that the Universe is contracting.

40 Which statement about the cosmic microwave background radiation (CMBR) is correct?

View solution

A CMBR now has a frequency higher than that of infrared radiation.

B CMBR has always had exactly the same frequency.

C CMBR had a shorter wavelength in the past.

D CMBR was produced a long time after the Universe was formed.

© UCLES 2025

BLANK PAGE

Permission to reproduce items where third-party owned material protected by copyright is included has been sought and cleared where possible. Every reasonable effort has been made by the publisher (UCLES) to trace copyright holders, but if any items requiring clearance have unwittingly been included, the publisher will be pleased to make amends at the earliest possible opportunity.

To avoid the issue of disclosure of answer-related information to candidates, all copyright acknowledgements are reproduced online in the Cambridge Assessment International Education Copyright Acknowledgements Booklet. This is produced for each series of examinations and is freely available to download at www.cambridgeinternational.org after the live examination series.

Cambridge Assessment International Education is part of Cambridge Assessment. Cambridge Assessment is the brand name of the University of Cambridge Local Examinations Syndicate (UCLES), which is a department of the University of Cambridge.

© UCLES 2025