Cambridge Assessment International Education

Cambridge IGCSE™

CANDIDATE NAME									
CENTRE NUMBER						CANDIDATE NUMBER			

PHYSICS **0625/31**

Paper 3 Theory (Core) **May/June 2025**

1 hour 15 minutes

You must answer on the question paper.

No additional materials are needed.

INSTRUCTIONS

- Answer **all** questions.
- Use a black or dark blue pen. You may use an HB pencil for any diagrams or graphs.
- Write your name, centre number and candidate number in the boxes at the top of the page.
- Write your answer to each question in the space provided.
- Do **not** use an erasable pen or correction fluid.
- Do **not** write on any bar codes.
- You may use a calculator.
- You should show all your working and use appropriate units.
- Take the weight of 1.0 kg to be 9.8 N (acceleration of free fall = 9.8 m / s^2).

INFORMATION

- The total mark for this paper is 80.
- The number of marks for each question or part question is shown in brackets [ ].

This document has **16** pages. Any blank pages are indicated.

© UCLES 2025

1 Fig. 1.1 shows the speed–time graph for a car travelling along a flat, straight road.
The graph has four sections, labelled JK, KL, LM and MN.

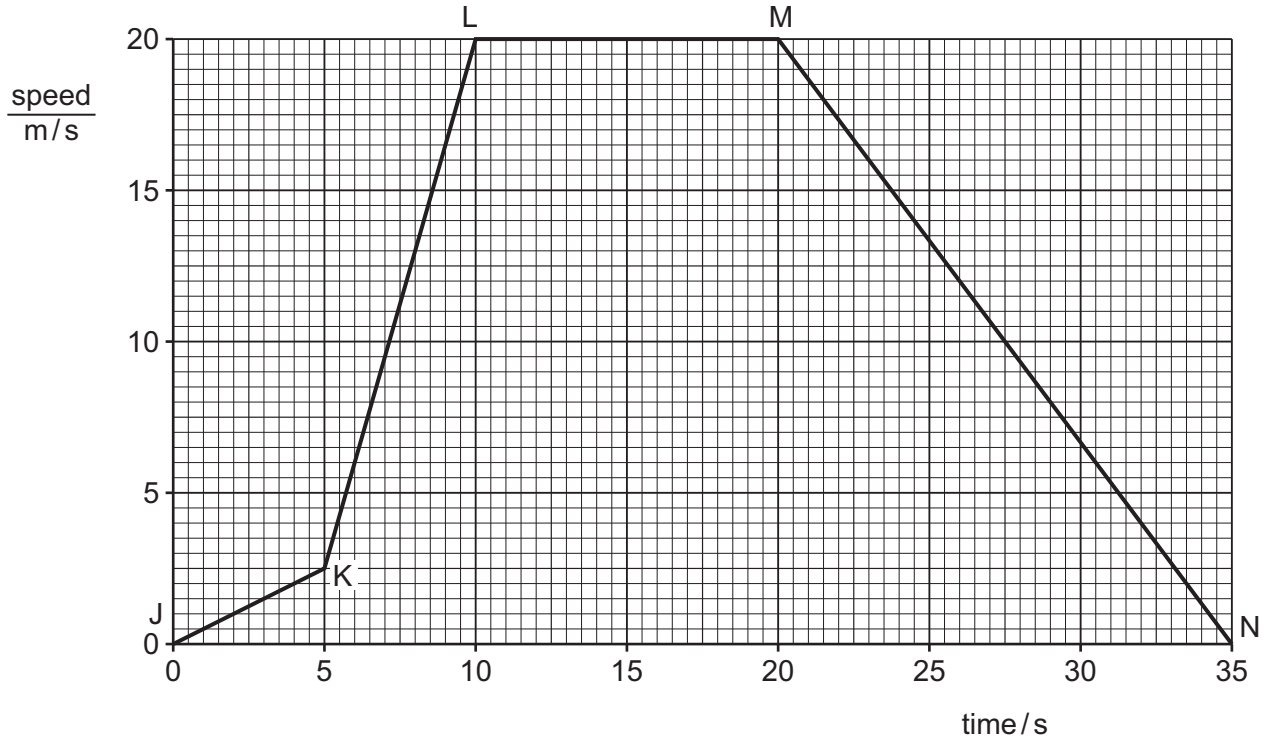

Fig. 1.1

(a) Complete the following sentence.

The car has the largest acceleration in section ..... . [1]

(b) Calculate the distance travelled by the car between time = 20 s and time = 35 s.

distance travelled = ... m [3]

(c) Describe the motion of the car during:

(i) section LM

..... [1]

(ii) section MN.

..... [1]

(d) Another car travels a distance of 500 m in a time of 20 s.

Calculate the average speed of this car.

View solution

average speed = ... m/s [3]

[Total: 9]

© UCLES 2025

2 A student uses a stop-watch to measure the time for one complete oscillation of a pendulum.

Fig. 2.1 shows his measurement.



Fig. 2.1

(a) State the time taken for **one** complete oscillation. Use the information in Fig. 2.1.

View solution

time for one complete oscillation = ... s [1]

(b) Another student uses a different pendulum and measures the time for 15 complete oscillations. The time for 15 complete oscillations is 11.7 s.

Calculate the average time for **one** complete oscillation.

View solution

average time for one complete oscillation = ... s [2]

(c) Fig. 2.2 represents a pendulum. P and Q are the extreme positions of the pendulum bob. R is the position of the bob when the string is vertical.

View solution

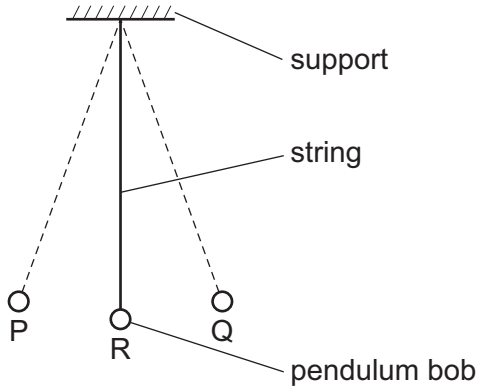

Fig. 2.2

A student holds the pendulum bob at P and then releases it.

Describe the movement of the pendulum bob during **one** complete oscillation of the pendulum. You may draw on Fig. 2.2 as part of your answer.

.....

.....

.....

..... [2]

[Total: 5]

3 A wooden beam is used in a see-saw.

View solution

(a) The mass of the wooden beam is 40 kg.

Calculate the weight of the wooden beam.

weight of beam = ... N [2]

(b) Two children balance the wooden beam horizontally on a log. The wooden beam pivots on the log to make the see-saw.
Fig. 3.1 shows the children on the see-saw.

View solution

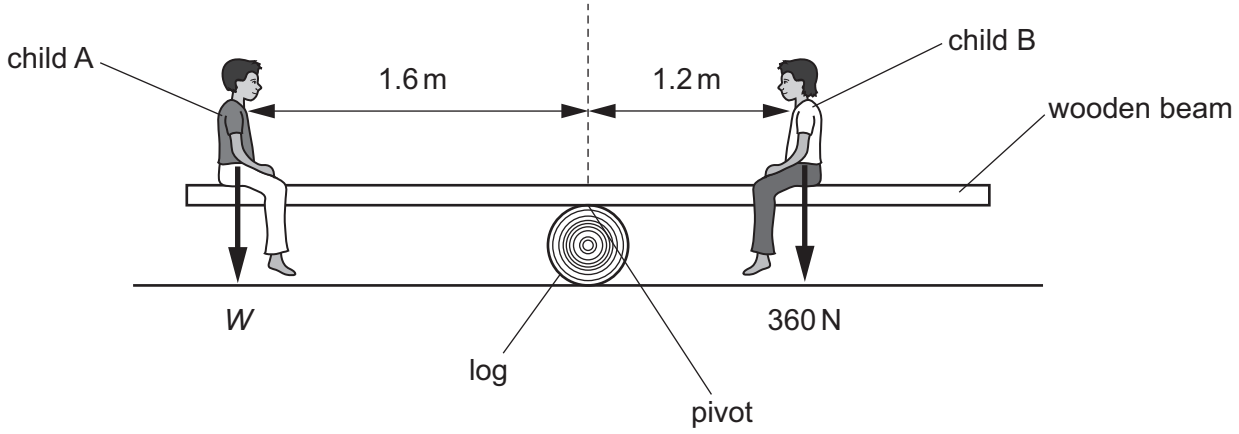

Fig. 3.1 (not to scale)

The see-saw balances horizontally, as shown in Fig. 3.1. The weight of child B is 360 N.

Calculate the weight *W* of child A.

State and use the principle of moments in your answer.

weight *W* of child A = ... N [4]

[Total: 6]

© UCLES 2025

4 An electric motor lifts a load.
Fig. 4.1 shows the arrangement.

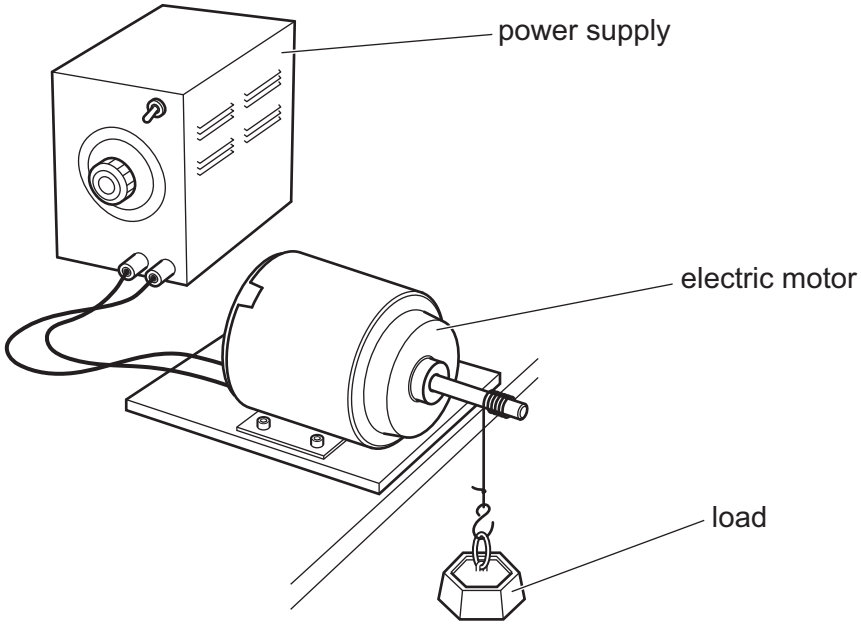

Fig. 4.1

(a) (i) The weight of the load is 15 N. The load is raised a vertical distance of 0.80 m.

View solution

Calculate the work done on the load.

work done on load = ... J [3]

(ii) Describe **one** way in which energy is wasted as the electric motor lifts the load.

View solution

.....

..... [2]

(b) A hydroelectric power station generates electrical power using the energy stored in water behind a dam.

View solution

Describe how a hydroelectric power station generates electrical power.

.....

.....

.....

..... [3]

[Total: 8]

5 **(a)** A student uses the apparatus in Fig. 5.1 to compare how different surfaces absorb infrared radiation.

View solution

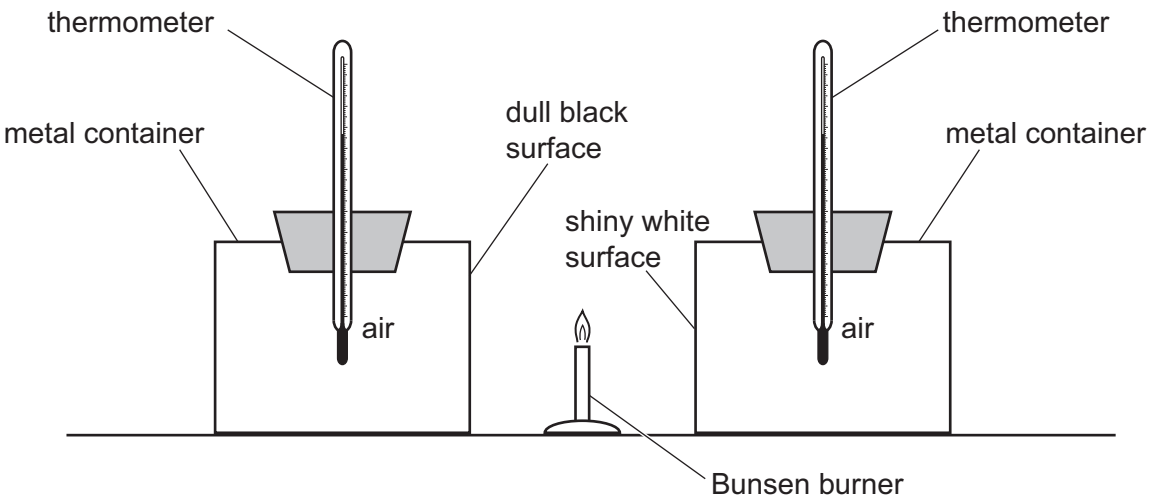

Fig. 5.1

There are two metal containers. One has a dull black surface and the other has a shiny white surface.

Before heating, the air inside the metal containers is at the same temperature.

The Bunsen burner flame is the same distance from each metal container. The Bunsen burner flame emits infrared radiation and heats the metal containers for three minutes.

Explain the difference between the temperatures of the air inside the two metal containers after heating for three minutes.

.....

.....

.....

.....

..... [2]

© UCLES 2025

(b) A teacher has some equipment for comparing thermal conductivity. The teacher has four metal rods and one glass rod. The metals are brass, copper, iron and steel. All five rods are the same size and shape.

Describe how the teacher may use the rods to compare the thermal conductivity of the five materials.

You may draw a labelled diagram as part of your answer.

View solution

.....

.....

.....

.....

.....

..... [4]

[Total: 6]

6 **(a)** Fig. 6.1 represents a ray of red light travelling into and through a glass block.

View solution

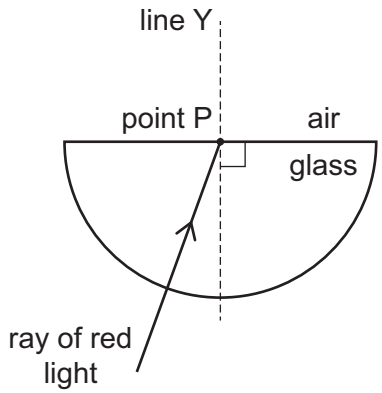

Fig. 6.1

(i) State the name of the dashed line labelled line Y in Fig. 6.1.

..... [1]

(ii) On Fig. 6.1, label the angle of incidence for the ray of red light at point P. Use the letter X. [1]

(iii) The ray of red light travels from the glass into the air at point P.

On Fig. 6.1, draw the path for the ray of red light after it leaves the glass at point P. [1]

(b) Fig. 6.2 represents a converging lens that is forming the image of an object.

View solution

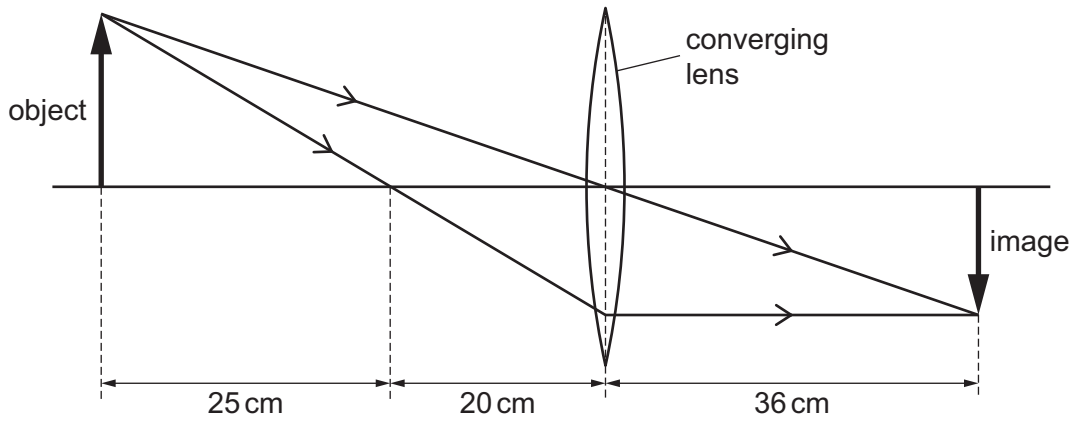

Fig. 6.2 (not to scale)

(i) Use the information on Fig. 6.2 to determine the focal length of the lens.

focal length of lens = ... cm [1]

(ii) State **two** characteristics of the image in Fig. 6.2.

View solution

1 .....

2 .....

[2]

[Total: 6]

© UCLES 2025

7 **(a)** A transverse wave passes through a medium. Fig. 7.1 shows the displacement of particles in the medium.

View solution

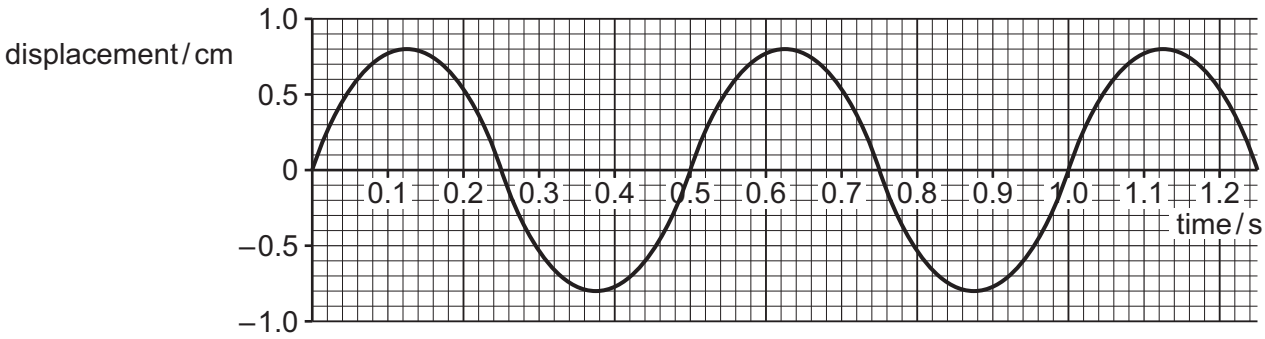

Fig. 7.1

Using the information in Fig. 7.1, determine:

(i) the amplitude of the wave

amplitude of wave = ... cm [1]

(ii) the frequency of the wave.

View solution

frequency of wave = ... Hz [2]

(b) Fig. 7.2 shows the regions of the electromagnetic spectrum in order of increasing frequency. Two of the regions are **not** labelled.

radio waves	microwaves	.....	visible light	.....	X-rays	gamma rays

Fig. 7.2

(i) Complete the chart in Fig. 7.2 by adding the names of the missing regions. [2]

(ii) The speed of yellow light is 3.0×10^{8} m / s. The wavelength of yellow light is 5.8×10^{-7} m.

Calculate the frequency of yellow light.

View solution

frequency = ... Hz [3]

[Total: 8]

© UCLES 2025

8 Fig. 8.1 shows the circuit diagram for a 16 Ω resistor and an 8.0 Ω resistor connected to a 6.0 V battery.

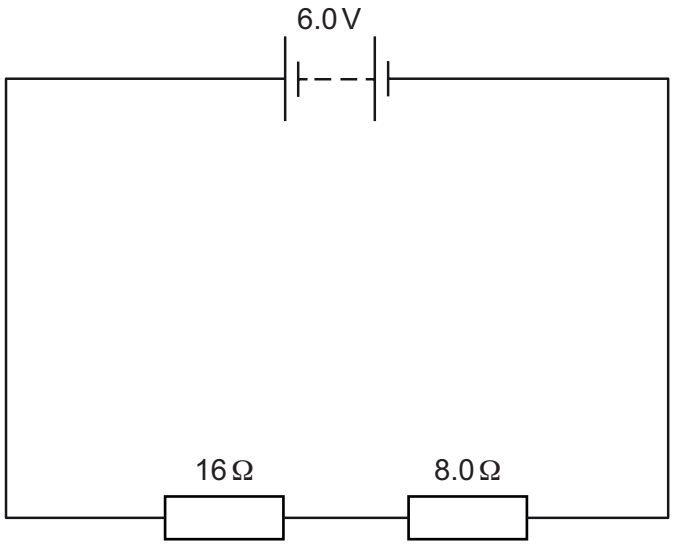

Fig. 8.1

(a) Calculate the combined resistance of the two resistors shown in Fig. 8.1.

View solution

combined resistance = ... Ω [2]

(b) The potential difference across the 8.0 Ω resistor is 2.0 V.

View solution

Calculate the current in the resistor.

current = ... A [3]

(c) State the name of the particles that move through the metal wires when there is a current in the circuit.

..... [1]

(d) A student measures the potential difference across the 16 Ω resistor by using a meter.

On Fig. 8.1, draw the electrical symbol for this meter and its connections. [2]

[Total: 8]

View solution

© UCLES 2025

9 Fig. 9.1 shows a router. The router emits Wi-Fi signals.

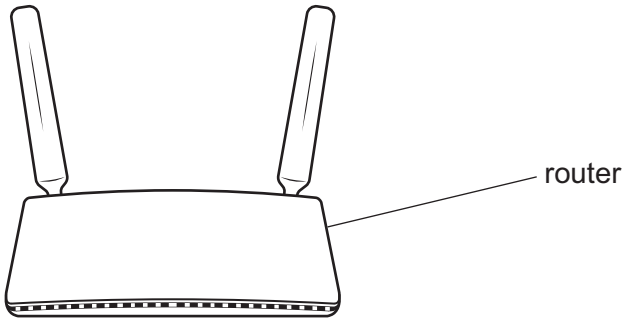

Fig. 9.1

(a) The power input to the router circuit is 9.0 W. The potential difference across the router circuit is 12 V.

Calculate the current in the router circuit.

View solution

current in router circuit = ... A [3]

(b) The energy used by the router each hour is 0.0090 kW h. One unit (kW h) of energy costs 50 cents.

Calculate the cost of using the router for 24 hours.

View solution

cost for 24 hours = ... cents [3]

(c) The router uses a transformer. The number of turns N_p on the primary coil of the transformer is 3600. The primary voltage V_p to the transformer is 240 V. The secondary voltage V_s of the transformer is 12 V.

Calculate the number of turns N_s on the secondary coil of the transformer.

View solution

number of turns on secondary coil = ... [3]

(d) The mains plug for the router includes a fuse that protects the router.

Explain how a fuse works.

View solution

.....

.....

..... [3]

[Total: 12]

© UCLES 2025

10 **(a)** Table 10.1 describes four nuclides.

View solution

Table 10.1

	americium-241	plutonium-239	plutonium-241	uranium-238
nuclide notation	$^{241}_{95}Am$	$^{239}_{94}Pu$	$^{241}_{94}Pu$	$^{238}_{92}U$

(i) Determine which **two** nuclides have the same number of nucleons.

..... [1]

(ii) Determine which nuclide has the largest number of neutrons.

View solution

..... [2]

(b) Plutonium-241 has a half-life of 14 years.

View solution

A sample of radioactive material contains 72 mg of plutonium-241.

Calculate the mass of plutonium-241 remaining in the sample after 42 years.

mass of plutonium-241 remaining = ... mg [3]

[Total: 6]

© UCLES 2025

11 **(a)** The Solar System includes the Sun and eight planets.

View solution

(i) State the name of the force that keeps the planets in orbit around the Sun.

..... [1]

View solution

(ii) State the name of the galaxy that includes the Solar System.

..... [1]

(b) State the meaning of the term light-year.

View solution

.....

..... [1]

(c) Describe the evidence for an expanding Universe.

View solution

.....

.....

.....

.....

..... [3]

[Total: 6]

BLANK PAGE

Permission to reproduce items where third-party owned material protected by copyright is included has been sought and cleared where possible. Every reasonable effort has been made by the publisher (UCLES) to trace copyright holders, but if any items requiring clearance have unwittingly been included, the publisher will be pleased to make amends at the earliest possible opportunity.

To avoid the issue of disclosure of answer-related information to candidates, all copyright acknowledgements are reproduced online in the Cambridge Assessment International Education Copyright Acknowledgements Booklet. This is produced for each series of examinations and is freely available to download at www.cambridgeinternational.org after the live examination series.

Cambridge Assessment International Education is part of Cambridge Assessment. Cambridge Assessment is the brand name of the University of Cambridge Local Examinations Syndicate (UCLES), which is a department of the University of Cambridge.

© UCLES 2025