Cambridge Assessment International Education

Cambridge IGCSE™

CANDIDATE NAME									
CENTRE NUMBER						CANDIDATE NUMBER				

PHYSICS **0625/32**

Paper 3 Theory (Core) **May/June 2025**

1 hour 15 minutes

You must answer on the question paper.

No additional materials are needed.

INSTRUCTIONS

- Answer **all** questions.
- Use a black or dark blue pen. You may use an HB pencil for any diagrams or graphs.
- Write your name, centre number and candidate number in the boxes at the top of the page.
- Write your answer to each question in the space provided.
- Do **not** use an erasable pen or correction fluid.
- Do **not** write on any bar codes.
- You may use a calculator.
- You should show all your working and use appropriate units.
- Take the weight of 1.0 kg to be 9.8 N (acceleration of free fall = 9.8 m / s^2).

INFORMATION

- The total mark for this paper is 80.
- The number of marks for each question or part question is shown in brackets [ ].

This document has **16** pages.

© UCLES 2025

1 **(a)** Fig. 1.1 shows the speed–time graphs for two racing cars, X and Y, at the beginning of a race.

View solution

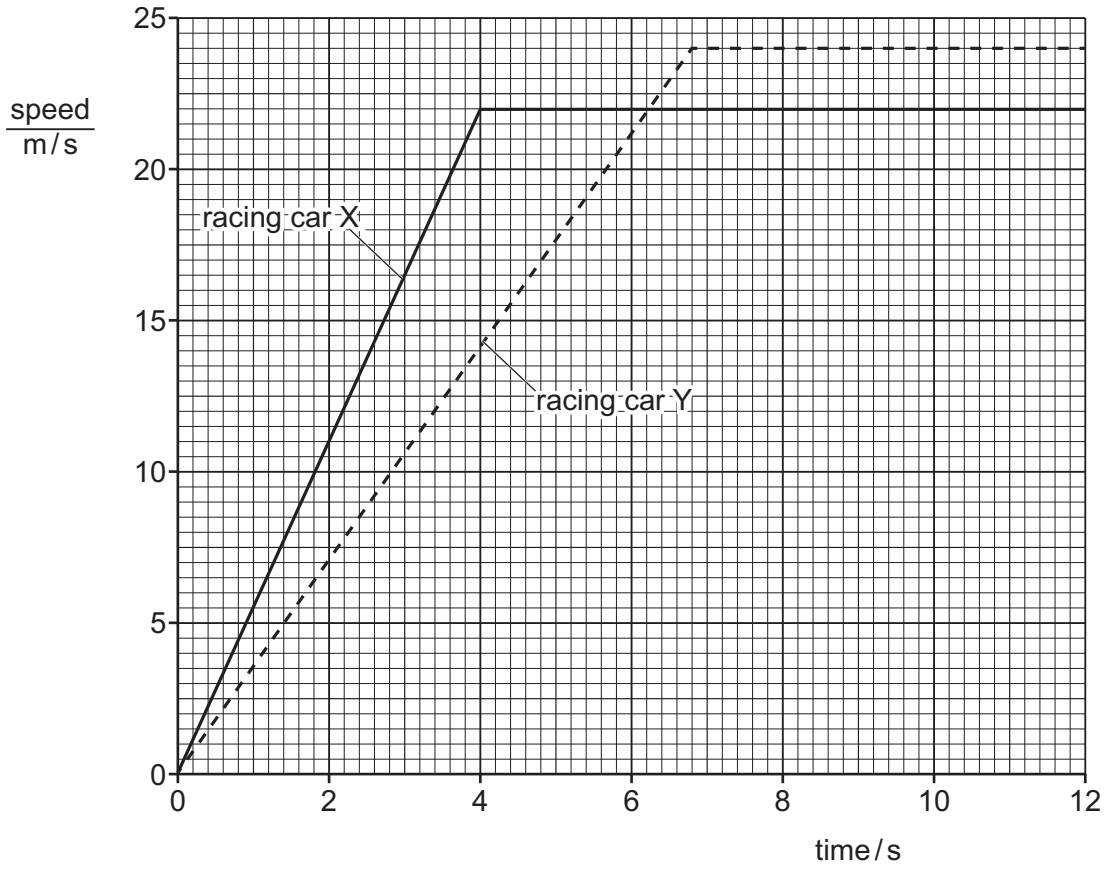

Fig. 1.1

(i) Using the information on Fig. 1.1, state and explain which racing car, X or Y, has the greater acceleration between time = 2 s and time = 4 s.

racing car .....

explanation .....

.....

[1]

(ii) Determine the speed of racing car Y at time = 10 s.

View solution

speed = ... m/s [1]

(iii) Determine the distance moved by racing car X from time = 0 to time = 4.0 s.

View solution

distance = ... m [3]

© UCLES 2025

(b) Fig. 1.2 shows the directions of four forces, *A*, *B*, *C* and *D*, acting on a racing car.

View solution

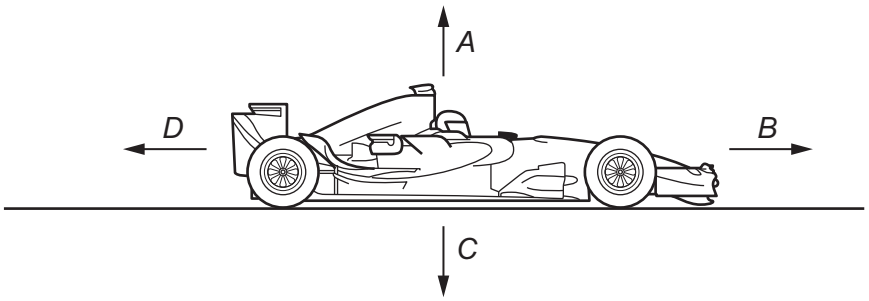

Fig. 1.2

(i) Force *B* is described as 'the driving force'.

Describe:

force *C* .....

force *D* .....

[2]

(ii) The racing car is decelerating along a straight horizontal track.
The value of force *D* is 2800 N.

View solution

Suggest a value for force *B*.

force *B* = ... N [1]

[Total: 8]

2 Some buildings are built on large, strong metal rods that are pushed deep into the ground.
A machine drops a heavy hammer onto each metal rod to push it into the ground, as shown in Fig. 2.1.

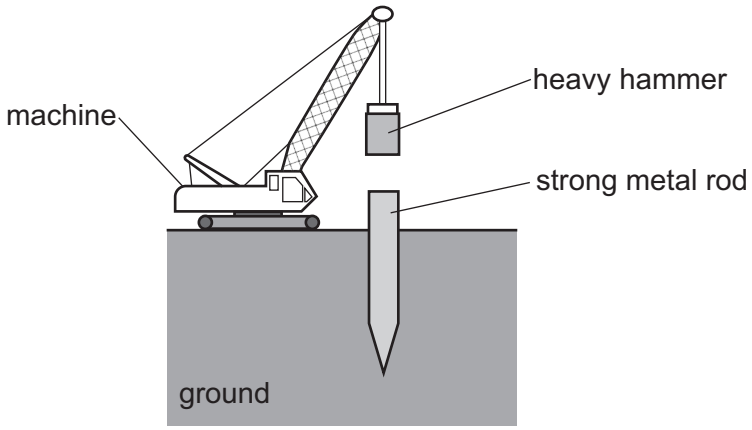

Fig. 2.1 (not to scale)

The weight of the heavy hammer is 25 000 N.

(a) Calculate the mass of the heavy hammer.

View solution

mass = ... kg [3]

(b) The machine lifts the heavy hammer through 0.72 m vertically.

View solution

Calculate the work done by the machine in lifting the heavy hammer. Include the unit.

work done = ... unit ..... [4]

(c) The heavy hammer falls onto the metal rod and pushes it into the ground.

View solution

Describe the energy transfers from the heavy hammer to the metal rod.

Your answer should refer to energy stores as well as transfers between energy stores.

.....

.....

.....

..... [2]

[Total: 9]

© UCLES 2025

3 **(a)** A student determines the weight *W* of a metal block by using a 1.5 N load and a uniform metre ruler. She places the centre of the uniform metre ruler on a pivot.

View solution

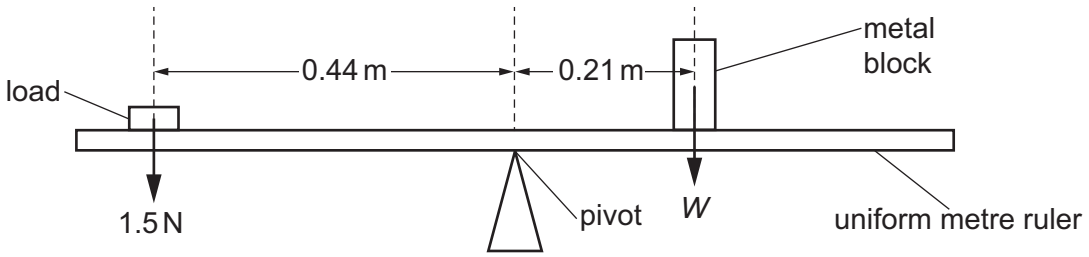

Fig. 3.1 (not to scale)

She moves the metal block and the 1.5 N load until the uniform metre ruler balances horizontally as shown in Fig. 3.1.

Calculate the weight *W* of the metal block. Use the principle of moments in your answer.

weight *W* = ... N [4]

(b) A different metal block is lying on the ground, as shown in Fig. 3.2.

View solution

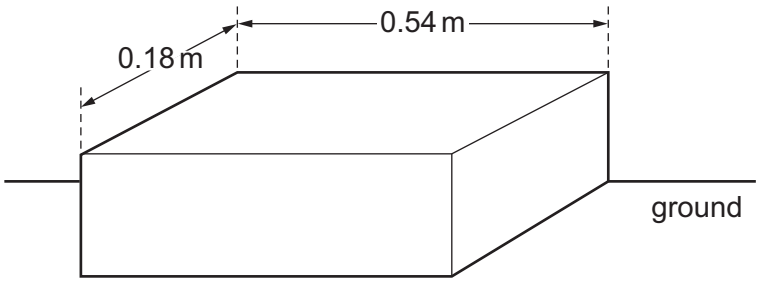

Fig. 3.2 (not to scale)

The weight of the metal block is 890 N.

Calculate the pressure on the ground caused by the block in the position shown in Fig. 3.2.

pressure = ... N/m^2 [3]

[Total: 7]

© UCLES 2025

4 **(a)** Complete the sentences about the kinetic particle model of matter.

(i) The movement of the particles in a gas is .....

..... . [1]

(ii) The forces between the particles in a gas are .....

..... . [1]

(iii) The gas exerts a pressure because the moving gas particles .....

..... . [1]

(iv) As the temperature of a fixed volume of gas decreases, the pressure exerted by the gas

..... . [1]

(b) **(i)** State the value, in degrees Celsius, of the lowest possible temperature.

View solution

lowest possible temperature = ...°C [1]

(ii) State the term used for the lowest possible temperature.

..... [1]

[Total: 6]

View solution

© UCLES 2025

5 **(a)** A teacher produces a water wave in a ripple tank.
The wavelength of the water wave is 1.2 cm.
The speed of the water wave is 18 cm / s.

View solution

Calculate the frequency of the water wave.

frequency = ... Hz [3]

(b) Fig. 5.1 shows a ray of red light passing through a prism and emerging into the air.

View solution

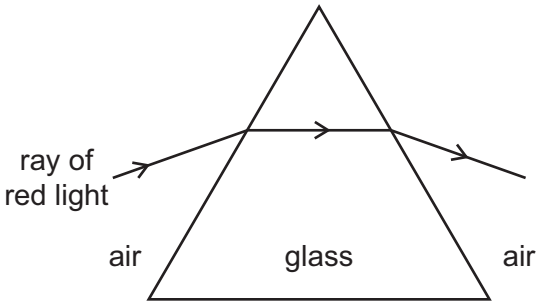

Fig. 5.1

(i) State the name of the process shown in Fig. 5.1 that occurs at the boundaries between air and glass.

..... [1]

(ii) A ray of **white** light replaces the ray of red light, as shown in Fig. 5.2. The ray of **white** light splits into different colours.

View solution

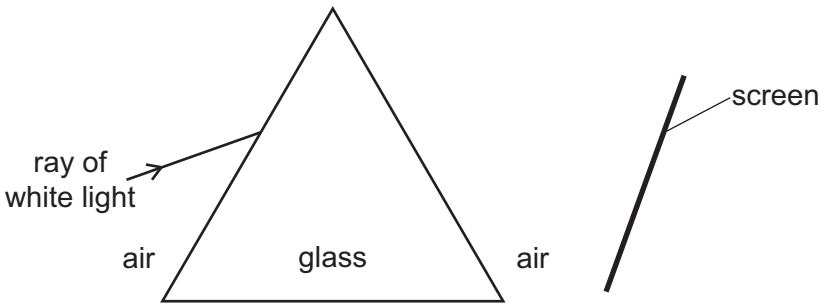

Fig. 5.2

Draw on Fig. 5.2 to show the dispersion of white light to produce a coloured spectrum on a screen. Label the red and violet (purple) parts of the spectrum. [3]

[Total: 7]

© UCLES 2025

6 **(a)** A teacher uses the equipment shown in Fig. 6.1.

View solution

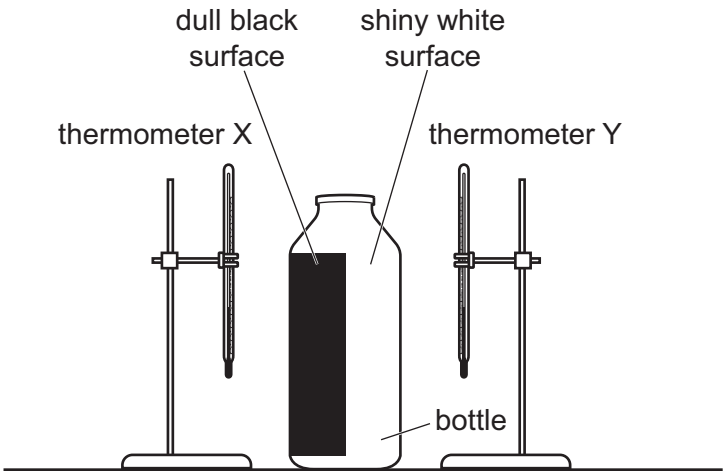

Fig. 6.1

The thermometers X and Y are the same distance from the bottle.

The room temperature is 20 °C.

The teacher pours very hot water into the bottle.

After 5 minutes, the teacher observes the reading on each thermometer.

The reading on thermometer X is 24 °C.

(i) The reading on thermometer Y is **not** 24 °C.

Explain why the readings on the two thermometers are **not** the same.

.....

.....

.....

..... [2]

(ii) Suggest a value for the reading on thermometer Y.

thermometer Y reading = ... °C [1]

View solution

(b) A student demonstrates convection in a liquid. The student has a water supply and the following equipment: a candle, a glass beaker, a tripod and some coloured crystals. The coloured crystals dissolve in warm water.

View solution

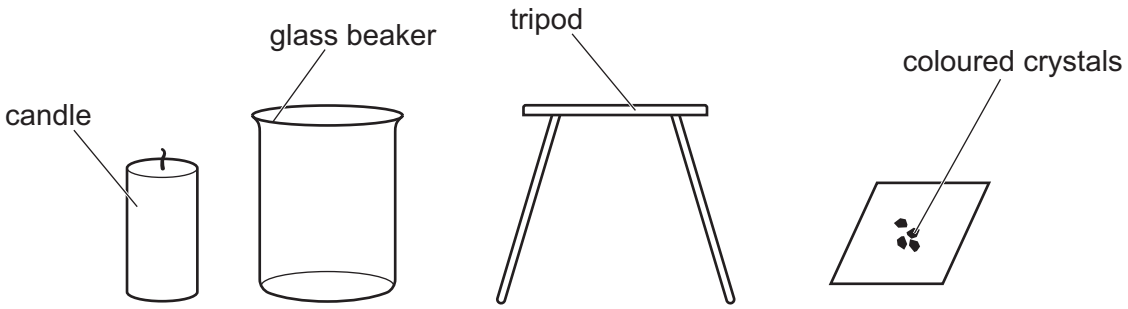

Fig. 6.2

Describe how the student can demonstrate convection in a liquid by using the equipment shown in Fig. 6.2. You may draw a diagram as part of your answer.

.....

.....

.....

.....

.....

..... [4]

[Total: 7]

7 **(a)** Place ticks (✓) in Table 7.1 to show the properties of sound waves and of microwaves.

View solution

Table 7.1

property	sound waves	microwaves
longitudinal		
transverse		
electromagnetic		
travel in a vacuum		

[2]

(b) Scientists have placed reflectors on the Moon. Scientists use the reflectors to measure the distance between the Earth and the Moon.

View solution

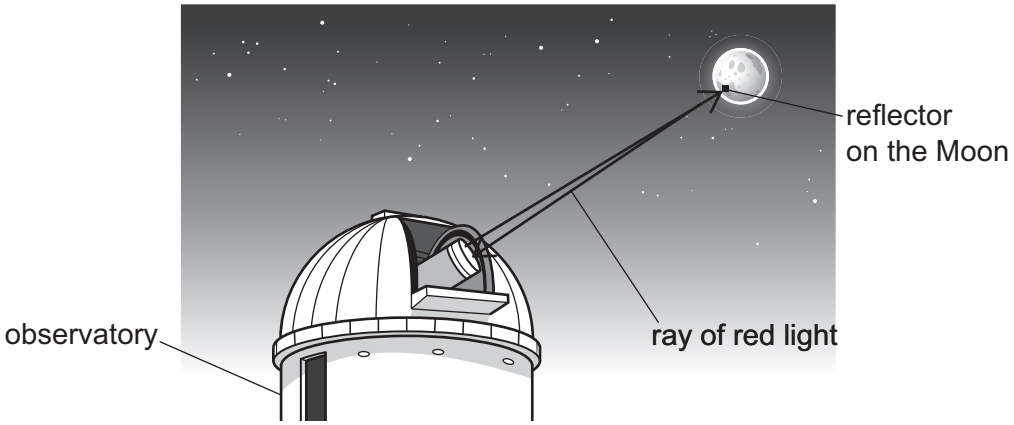

Fig. 7.1 (not to scale)

A scientist in an observatory sends a ray of red light from the observatory to the reflector on the Moon, as shown in Fig. 7.1.
The ray takes a total time of 2.5 s to travel from the observatory to the reflector and back to the observatory. The speed of light is 3.0×10^8 m/s.

Calculate the distance between the observatory and the reflector.

distance = ... m [3]

(c) **(i)** State **one** use of ultraviolet rays.

View solution

..... [1]

(ii) State **one** harmful effect of ultraviolet rays.

..... [1]

[Total: 7]

© UCLES 2025

8 Fig. 8.1 shows a mains-powered electric fan heater fixed on a bathroom wall.

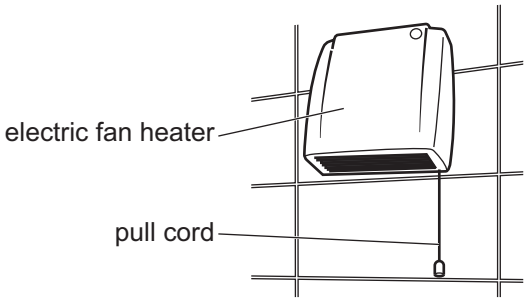

Fig. 8.1

The pull cord switches the fan heater on and off.

(a) Suggest why a pull cord is safer than a push switch for a fan heater in a bathroom.

View solution

.....

..... [1]

(b) Fig. 8.2 shows the electric circuit for the fan heater.

View solution

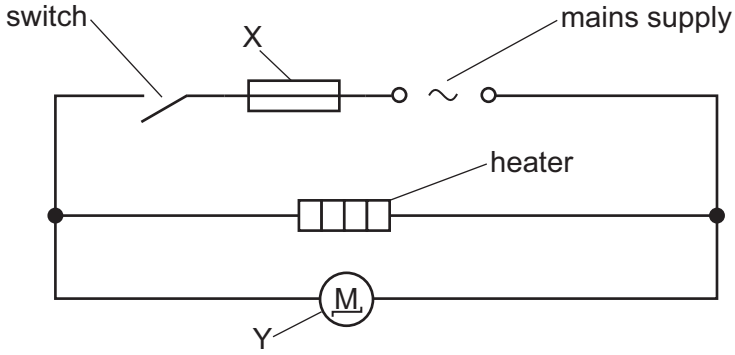

Fig. 8.2

State the name for component X and for component Y.

X .....

Y .....
[2]

(c) Fig. 8.3 shows the information label on the fan heater.

View solution

power = 2000 W
voltage = 230 V

Fig. 8.3

Calculate the current supplied to the fan heater.

current = ... A [3]

[Total: 6]

© UCLES 2025

9 Fig. 9.1 shows two resistors connected in series.



Fig. 9.1

(a) Calculate the combined resistance of the two resistors in series.

View solution

combined resistance = ... Ω [1]

(b) The two resistors in Fig. 9.1 are connected to an ammeter and a 12 V battery, as shown in Fig. 9.2.

View solution

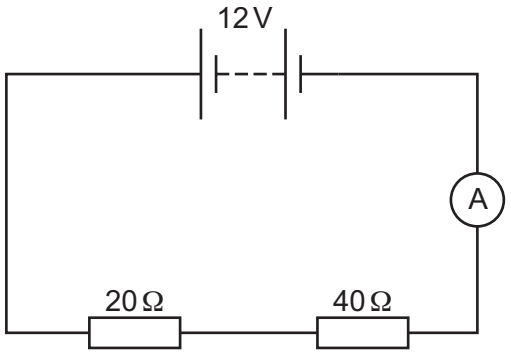

Fig. 9.2

The reading on the ammeter is 0.20 A.

(i) Calculate the potential difference (p.d.) across the 20 Ω resistor.

potential difference = ... V [3]

(ii) A student uses a voltmeter to measure the potential difference across the 20 Ω resistor.

Draw on Fig. 9.2 to show how the student connects the voltmeter. Use the correct circuit symbol for the voltmeter. [2]

View solution

(c) The student removes the two resistors and then connects them in parallel, as shown in Fig. 9.3.

View solution

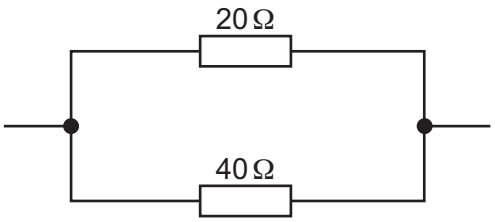

Fig. 9.3

Suggest a value for the combined resistance of the two resistors in parallel.

combined resistance = ... Ω [1]

[Total: 7]

© UCLES 2025

10 **(a)** Radon-222 is a radioactive gas that emits alpha (α) particles.

View solution

The nuclide notation for radon-222 is $^{222}_{86}Rn$.

(i) State the number of protons in **one** nucleus of radon-222.

number of protons = ... [1]

(ii) Determine the number of neutrons in **one** nucleus of radon-222.

View solution

number of neutrons = ... [1]

(b) A sample containing 60 mg of radon-222 decays to 7.5 mg in 11.5 days.

View solution

Calculate the half-life of radon-222.

half-life = ... days [3]

(c) Radon gas is one source of background radiation.

View solution

Name **two** other sources that make a significant contribution to background radiation.

1 .....

2 .....

[2]

[Total: 7]

© UCLES 2025

11 Fig. 11.1 represents the Solar System. The Sun and five of the eight planets are labelled.

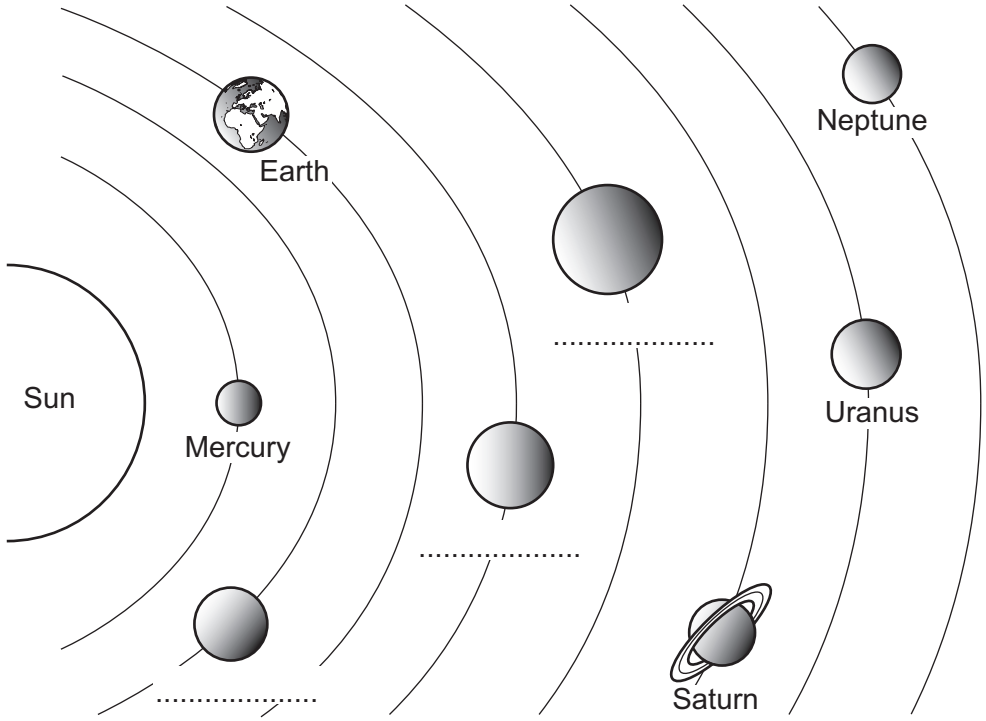

Fig. 11.1 (not to scale)

View solution

(a) Complete the **three** missing labels on Fig. 11.1 by writing the name of each planet on its dotted line. [2]

(b) **(i)** The Sun consists mainly of two elements.

View solution

Name the **two** elements.

..... and ..... [2]

(ii) The Sun radiates energy mainly in three regions of the electromagnetic spectrum. Ultraviolet is one of the three regions.

View solution

State the name of **one** of the other two regions.

..... [1]

(c) (i) Scientists use the Big Bang Theory to explain the way the Universe began.

View solution

State **one** piece of evidence that supports the Big Bang Theory.

.....

..... [1]

(ii) Scientists use the accretion model to explain the formation of the Solar System.

View solution

Complete the following sentences about the accretion model.

In space, there are clouds of dust and ..... .

The material spins around and moves closer together due to the force of ..... .

This forms an accretion ..... .

[3]

[Total: 9]

Permission to reproduce items where third-party owned material protected by copyright is included has been sought and cleared where possible. Every reasonable effort has been made by the publisher (UCLES) to trace copyright holders, but if any items requiring clearance have unwittingly been included, the publisher will be pleased to make amends at the earliest possible opportunity.

To avoid the issue of disclosure of answer-related information to candidates, all copyright acknowledgements are reproduced online in the Cambridge Assessment International Education Copyright Acknowledgements Booklet. This is produced for each series of examinations and is freely available to download at www.cambridgeinternational.org after the live examination series.

Cambridge Assessment International Education is part of Cambridge Assessment. Cambridge Assessment is the brand name of the University of Cambridge Local Examinations Syndicate (UCLES), which is a department of the University of Cambridge.

© UCLES 2025