Cambridge Assessment International Education

Cambridge IGCSE™

CANDIDATE NAME									
CENTRE NUMBER						CANDIDATE NUMBER				

PHYSICS **0625/41**

Paper 4 Theory (Extended) **May/June 2025**

1 hour 15 minutes

You must answer on the question paper.

No additional materials are needed.

INSTRUCTIONS

- Answer **all** questions.
- Use a black or dark blue pen. You may use an HB pencil for any diagrams or graphs.
- Write your name, centre number and candidate number in the boxes at the top of the page.
- Write your answer to each question in the space provided.
- Do **not** use an erasable pen or correction fluid.
- Do **not** write on any bar codes.
- You may use a calculator.
- You should show all your working and use appropriate units.
- Take the weight of 1.0 kg to be 9.8 N (acceleration of free fall = 9.8 m / s^2).

INFORMATION

- The total mark for this paper is 80.
- The number of marks for each question or part question is shown in brackets [ ].

This document has **16** pages.

© UCLES 2025

1 **(a)** Circle the vector quantities in the list.

View solution

acceleration **mass** **speed** **time** **velocity**

[1]

(b) Fig. 1.1 shows the speed–time graph for a train travelling from station A to station B.

View solution

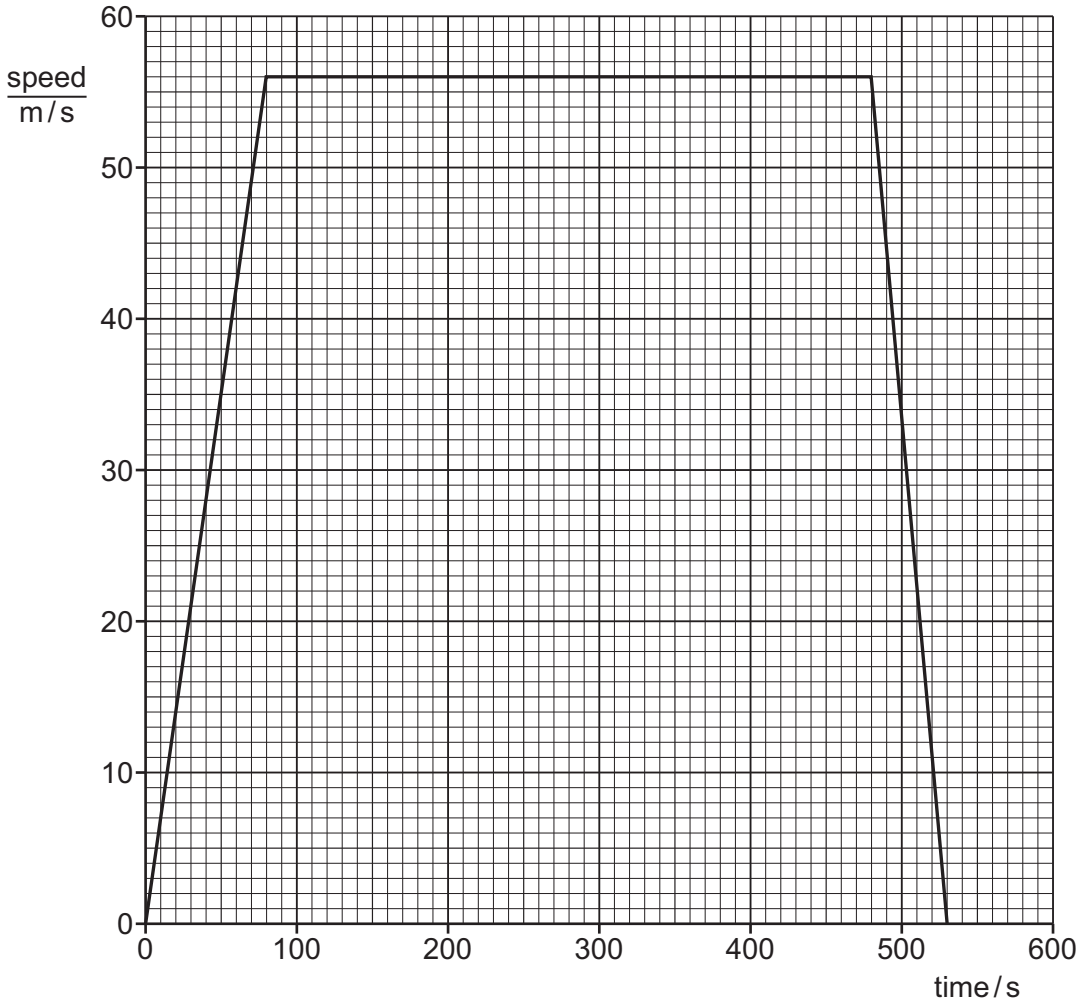

Fig. 1.1

(i) State the maximum speed of the train.

maximum speed = ... [1]

(ii) Describe the motion of the train between station A and station B.

View solution

.....

.....

..... [2]

(iii) Calculate the distance between station A and station B.

View solution

distance = ... [3]

(iv) On a different day, the train takes 650 s to travel between station A and station B.

View solution

Suggest **one** change to the motion of the train that leads to this longer journey time.

.....

..... [1]

[Total: 8]

2 **(a)** A resultant force is applied to an object moving with a velocity v in a straight line.

View solution

(i) State **two** different changes to the motion that the resultant force may cause.

1 .....

2 .....

[2]

(ii) State **one** other way that forces may change a stationary object.

View solution

..... [1]

(b) Describe how a uniform metre ruler, a pivot and a selection of masses can be used to demonstrate that there is no resultant moment on an object in equilibrium.

You may include a labelled diagram in your answer.

View solution

.....

.....

.....

.....

.....

..... [4]

[Total: 7]

3 Fig. 3.1 shows a side view of part of a concrete track at a skateboard park.

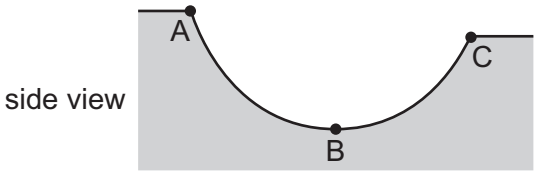

Fig. 3.1

View solution

(a) A skateboarder is initially at rest at point A. The skateboarder then travels through point B and comes to rest at point C.

Describe the transfer of energy as the skateboarder travels from A to B to C along the concrete track.

.....

.....

..... [2]

(b) **(i)** B is at ground level and C is at 2.8 m above ground level. The mass of the skateboarder is 65 kg.

View solution

Calculate the work done on the skateboarder as she travels from B to C.

work done = ... [2]

(ii) The skateboarder falls off the skateboard at B. She hits the track and comes to rest after a few milliseconds.

State the equation that defines the force *F* with which the skateboarder hits the track. State the meaning of any symbols you use.

.....

..... [2]

[Total: 6]

View solution

4 Fig. 4.1 shows a heater used to warm the air in a room.

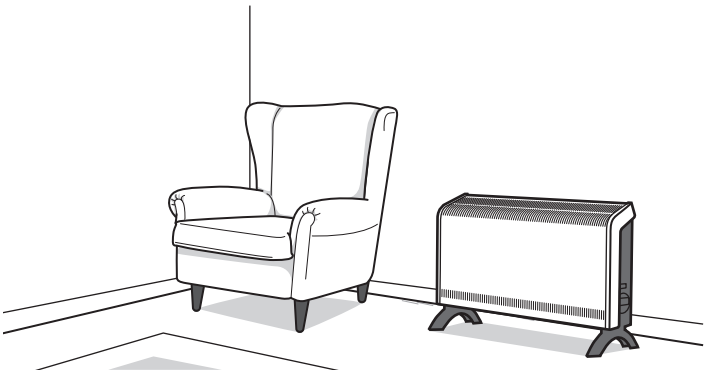

Fig. 4.1

(a) **(i)** State the main method of thermal energy transfer throughout the air in the room.

View solution

..... [1]

(ii) Explain how the heater warms **all** the air in the room.

View solution

.....

.....

.....

.....

..... [3]

(b) The power of the heater is 2.0 kW when it is connected to the mains supply with an e.m.f. of 230 V.

(i) Show that the current in the heater is approximately 8.7 A.

View solution

[2]

(ii) The plug connecting the heater to the mains supply is fitted with a fuse.

View solution

Fuse ratings of 3A, 5A, 10A and 13A are available.

State which fuse is used. Explain your answer.

fuse .....

explanation .....

.....

..... [2]

[Total: 8]

© UCLES 2025

5 A ray of light is incident on a soap film. Fig. 5.1 shows a magnified image of a small part of the soap film. The ray of light is refracted as it enters the soap film.

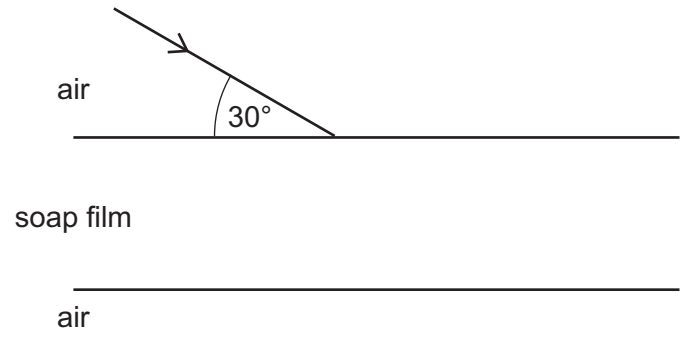

Fig. 5.1

The refractive index of the soap film is 1.28.

(a) Define refractive index in terms of the speed of light.

View solution

.....

..... [1]

(b) **(i)** Show that the angle of refraction as the light enters the soap film is approximately 43°.

View solution

[2]

(ii) On Fig. 5.1, carefully draw the refracted light ray in the soap film and label the angle of refraction. [2]

(c) The ray of light is monochromatic red light with a wavelength of 680 nm in air.

View solution

(i) Define monochromatic.

.....

..... [1]

(ii) Calculate the frequency of the light.

View solution

frequency = ... [3]

[Total: 9]

© UCLES 2025

6 Fig. 6.1 shows a person using a magnetic window cleaner. The part on the outside of the window is attracted to the inside part through the glass window.

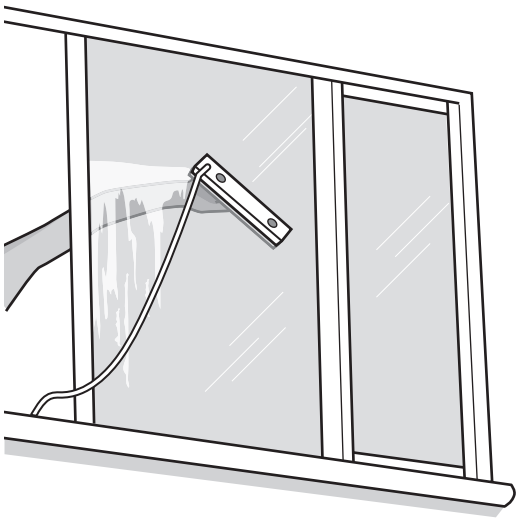

Fig. 6.1

Each part of the window cleaner contains two magnets. Fig. 6.2 shows the magnetic field between the parts of the window cleaner.

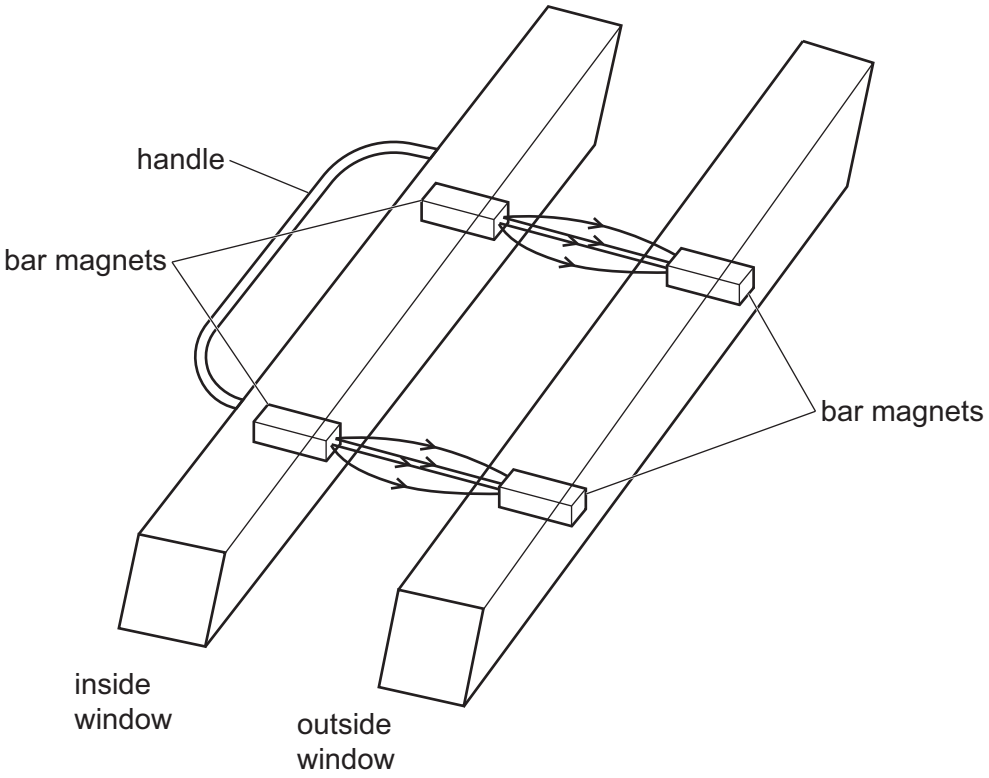

Fig. 6.2

(a) Glass is **not** a magnetic material.

State the difference between magnetic and non-magnetic materials.

View solution

.....

..... [1]

(b) Suggest a suitable material for the magnets in the window cleaner. Explain your answer.

View solution

.....

..... [1]

(c) Label the poles of the magnets in Fig. 6.2.

View solution [1]

(d) State how the field lines in Fig. 6.2 show different strengths of the magnetic field between the magnets.

.....

..... [1]

[Total: 4]

View solution

7 **(a)** Fig. 7.1 shows a sketch of the current–voltage graph for an electrical component.

View solution

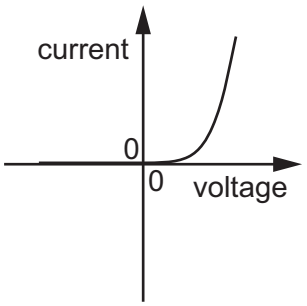

Fig. 7.1

(i) Name the electrical component.

Explain how you identified the component from the graph in Fig. 7.1.

name .....

explanation .....

.....

[2]

(ii) Draw the circuit symbol for this component.

View solution

[1]

(b) Fig. 7.2 shows an electric circuit for two identical electric heaters, A and B, connected to a mains supply of 230 V.

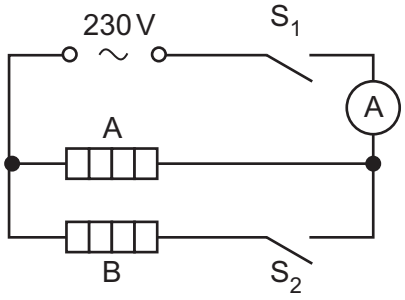

Fig. 7.2

S_1 is closed. S_2 is open. The reading on the ammeter is 3.9 A.

(i) Calculate the resistance of heater A.

View solution

resistance = ... [2]

(ii) Calculate the energy transferred by heater A in 5.0 minutes.

View solution

energy = ... [3]

(iii) S_1 remains closed and S_2 is closed.

Determine the reading on the ammeter. Show your working.

View solution

ammeter reading = ... [2]

[Total: 10]

© UCLES 2025

8 Fig. 8.1 shows a diagram of part of a simple a.c. generator.

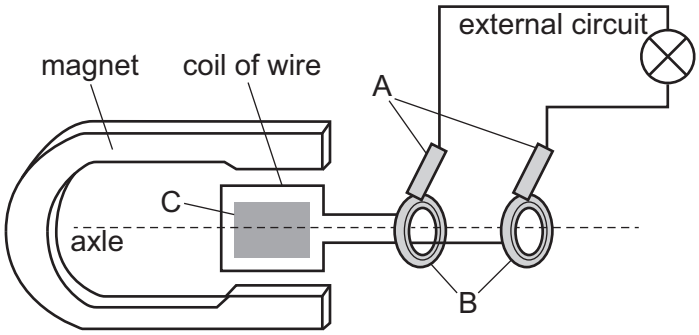

Fig. 8.1

(a) (i) Identify components A and B in Fig. 8.1.

View solution

A .....

B .....

[2]

(ii) Component C is made of soft iron.

View solution

Describe the effect of this component on the generator.

.....

..... [1]

(b) The coil of the generator rotates at a constant speed of two complete revolutions per second. Sketch a graph of the e.m.f. generated against time on the axes in Fig. 8.2. The coil is in the position shown in Fig. 8.1 at time = 0.

View solution

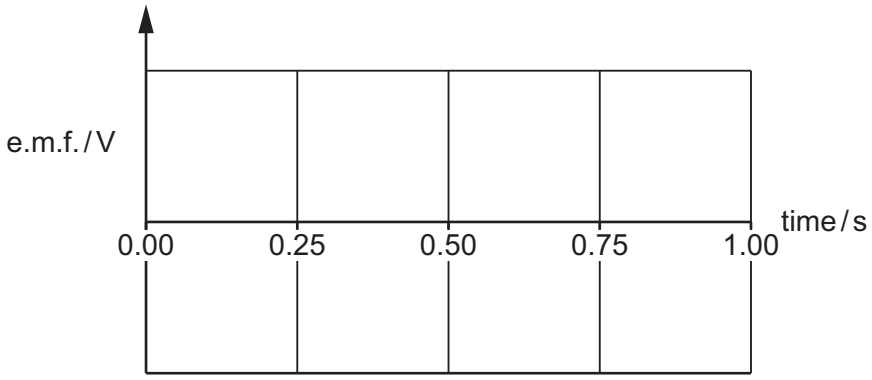

Fig. 8.2

[3]

(c) In power stations, transformers are used to step up the voltage of electricity generated before it is transmitted through cables over long distances.

View solution

(i) Explain the advantages of transmitting electricity at high voltages.

.....

.....

..... [2]

(ii) A power station generates electricity at 25 000 V. A transformer steps up the voltage to 300 000 V. The primary coil of the step-up transformer has 450 turns.

Calculate the number of turns N_s on the secondary coil of the transformer.

View solution

N_s = ... [2]

[Total: 10]

© UCLES 2025

9 Strontium-90 ($^{90}_{38}Sr$) is a radioactive isotope that contains 38 protons and 52 neutrons. Strontium-90 decays to form an isotope of yttrium (Y) by emitting beta (β) particles.

(a) (i) Suggest how the nucleus of a stable isotope of strontium differs from a nucleus of strontium-90. Explain your answer.

suggestion .....

explanation .....

.....

[2]

(ii) Complete the nuclide equation for the decay of strontium-90 to yttrium.

View solution

$$^{90}_{38}Sr \longrightarrow \overset{.....}{\underset{.....}{\quad}}Y + \overset{.....}{\underset{.....}{\quad}}\beta$$

[2]

(iii) Explain why scientists limit the amount of time they are exposed to radioactive strontium.

.....

..... [2]

(b) Yttrium is also unstable. A scientist places a sample of yttrium near a radiation detector. Table 9.1 shows the count rate recorded by the detector as the sample decays.

Table 9.1

time / h	recorded count rate / counts / min
0	68
50	49
100	38
150	32
200	26
250	24
300	20
350	21
400	20

© UCLES 2025

Fig. 9.1 shows a graph of the count rate **due to yttrium** against time.

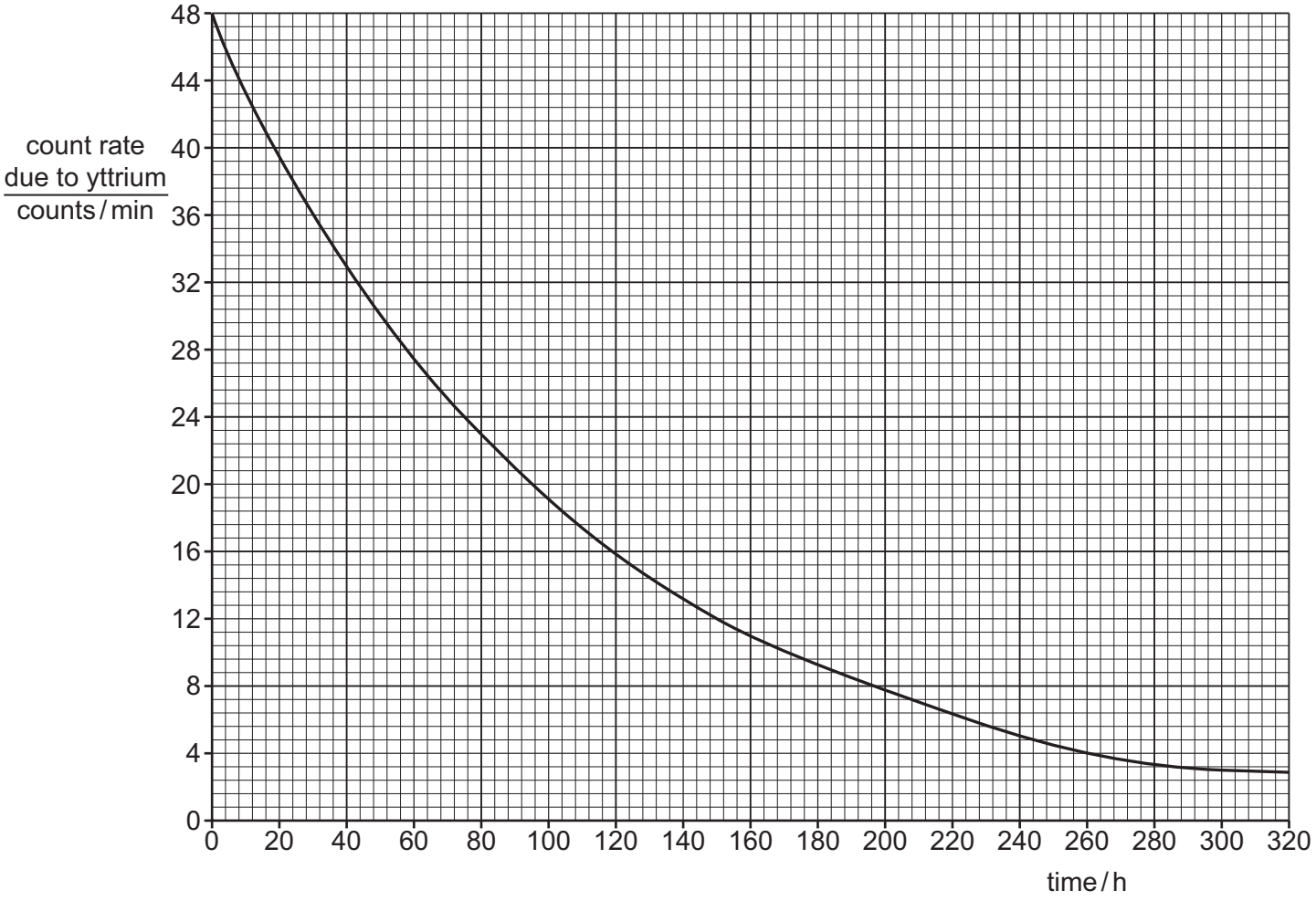

Fig. 9.1

(i) Use Fig. 9.1 to determine the half-life of yttrium. Show your working.

View solution

half-life = ... h [3]

(ii) Explain the difference between the count rate in Table 9.1 and the count rate due to yttrium plotted on the graph in Fig. 9.1.

.....

.....

..... [1]

[Total: 10]

© UCLES 2025

10 Jupiter and the Earth are planets in our Solar System.

View solution

(a) Describe the composition of Jupiter and the Earth.

Jupiter .....

the Earth .....

[2]

(b) The gravitational field strength at the surface of the Earth is approximately 9.8 N / kg. The gravitational field strength at the surface of Jupiter is approximately 23 N / kg.

View solution

(i) Define gravitational field strength.

.....

..... [2]

(ii) State **one** factor which causes the difference between the gravitational field strength at the surface of Jupiter and the gravitational field strength at the surface of the Earth.

.....

..... [1]

(c) State and explain the difference between the orbital speed of Jupiter and the orbital speed of the Earth.

statement .....

explanation .....

.....

[3]

[Total: 8]

View solution

Permission to reproduce items where third-party owned material protected by copyright is included has been sought and cleared where possible. Every reasonable effort has been made by the publisher (UCLES) to trace copyright holders, but if any items requiring clearance have unwittingly been included, the publisher will be pleased to make amends at the earliest possible opportunity.

To avoid the issue of disclosure of answer-related information to candidates, all copyright acknowledgements are reproduced online in the Cambridge Assessment International Education Copyright Acknowledgements Booklet. This is produced for each series of examinations and is freely available to download at www.cambridgeinternational.org after the live examination series.

Cambridge Assessment International Education is part of Cambridge Assessment. Cambridge Assessment is the brand name of the University of Cambridge Local Examinations Syndicate (UCLES), which is a department of the University of Cambridge.

© UCLES 2025