Cambridge Assessment International Education

Cambridge IGCSE™

CANDIDATE NAME									
CENTRE NUMBER						CANDIDATE NUMBER				

PHYSICS **0625/43**

Paper 4 Theory (Extended) **May/June 2025**

1 hour 15 minutes

You must answer on the question paper.

No additional materials are needed.

INSTRUCTIONS

- Answer **all** questions.
- Use a black or dark blue pen. You may use an HB pencil for any diagrams or graphs.
- Write your name, centre number and candidate number in the boxes at the top of the page.
- Write your answer to each question in the space provided.
- Do **not** use an erasable pen or correction fluid.
- Do **not** write on any bar codes.
- You may use a calculator.
- You should show all your working and use appropriate units.
- Take the weight of 1.0 kg to be 9.8 N (acceleration of free fall = 9.8 m / s^2).

INFORMATION

- The total mark for this paper is 80.
- The number of marks for each question or part question is shown in brackets [ ].

This document has **16** pages. Any blank pages are indicated.

© UCLES 2025

BLANK PAGE

© UCLES 2025

1 A car travels at a speed of 20 m / s. The driver applies the brakes when he sees a red traffic light.

Fig. 1.1 shows the speed–time graph for the car.

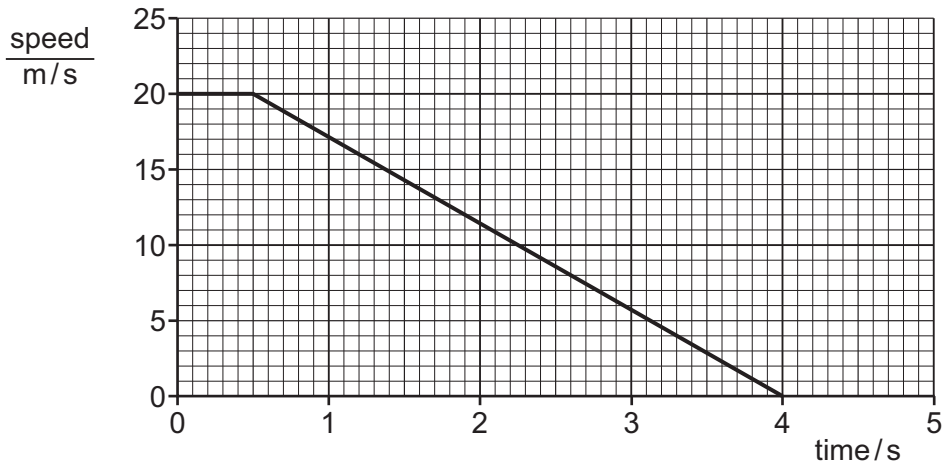

Fig. 1.1

(a) Determine the speed of the car at time = 2.0 s.

View solution

speed of the car = ... [1]

(b) Calculate the distance travelled by the car between time = 0 and time = 4.0 s.

View solution

distance travelled = ... [3]

(c) Calculate the deceleration of the car between time = 0.5 s and time = 4.0 s.

View solution

deceleration = ... [3]

[Total: 7]

© UCLES 2025

2 Fig. 2.1 shows a space vehicle which consists of a capsule and a nose cone.

The space vehicle is moving at a velocity of 7800 m / s. The mass of the space vehicle is 840 kg.

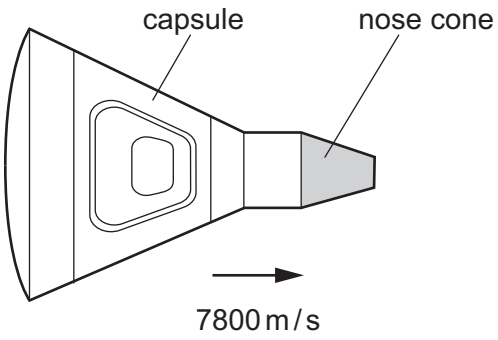

Fig. 2.1

(a) Show that the momentum of the space vehicle is approximately 6.55×10^6 kg m / s.

View solution

[1]

(b) The capsule ejects the nose cone, as shown in Fig. 2.2.

View solution

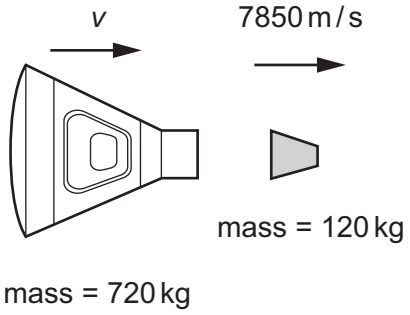

Fig. 2.2 (not to scale)

Determine the velocity v of the capsule after the nose cone is ejected. Give your answer to 3 significant figures.

velocity v of the capsule = ... [3]

© UCLES 2025

(c) A different space capsule returns to Earth.
Fig. 2.3 shows this capsule just before it lands in the sea.
The capsule travels at terminal velocity.

View solution

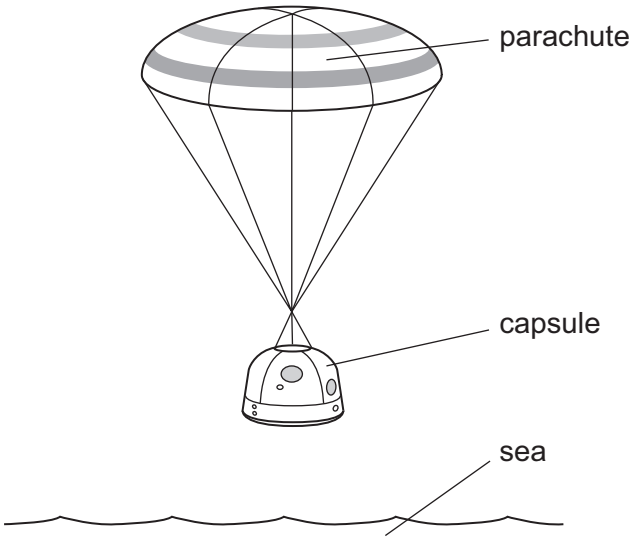

Fig. 2.3

The upward vertical force acting on the capsule is 120 kN.

Calculate the mass of the capsule.

mass of the capsule = ... [2]

[Total: 6]

© UCLES 2025

3 Fig. 3.1 shows an archer aiming an arrow at a target.

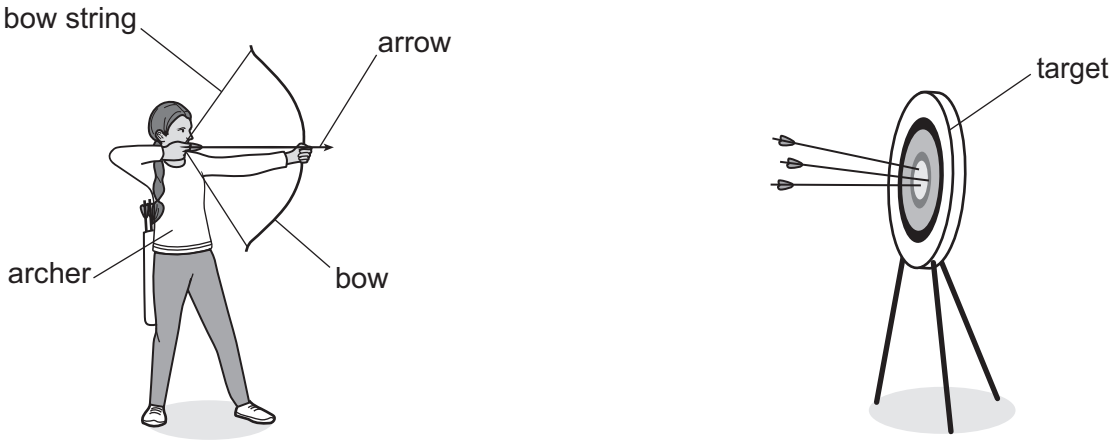

Fig. 3.1

(a) The archer pulls back on the bow string, doing a total of 110 J of work. Her hand moves a distance of 0.45 m. The bow is bent and stores energy.

Show that the average force applied by the archer in pulling the string back is approximately 240 N.

View solution

[2]

(b) The archer releases the bow string. All the energy in **(a)** is transferred to the arrow.

View solution

The arrow moves off at an initial speed v. The mass of the arrow is 0.030 kg.

(i) Calculate the initial speed v of the arrow.

initial speed v = ... [3]

(ii) Explain why the speed of the arrow as it hits the target is less than the value in **(b)(i)**.

View solution

.....

..... [2]

[Total: 7]

4 Fig. 4.1 shows a pan with a copper base on a hotplate. The hotplate heats the pan and the water.

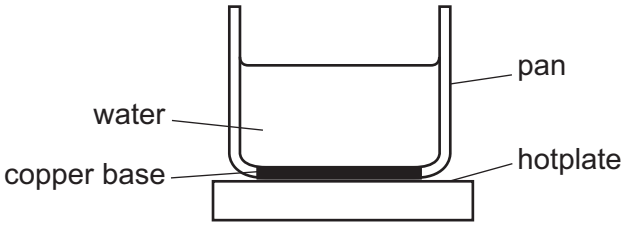

Fig. 4.1

(a) Explain how thermal energy is conducted through the copper base.

View solution

.....

.....

.....

..... [3]

(b) **(i)** Define, in words, specific heat capacity.

View solution

.....

.....

..... [2]

(ii) A student heats a metal object to 100 °C. The student places the metal object in an insulated cup containing water at 22 °C. The final temperature of the water and the metal object is 31 °C.

View solution

The specific heat capacity of water is 4.2 J / (g °C).
The mass of the water in the insulated cup is 50 g.
The mass of the metal object is 54 g.

Calculate the specific heat capacity of the metal.

specific heat capacity = ... [3]

[Total: 8]

© UCLES 2025

5 Fig. 5.1 shows four rays of red light, P, Q, R and S, coming from a spotlight in a swimming pool.

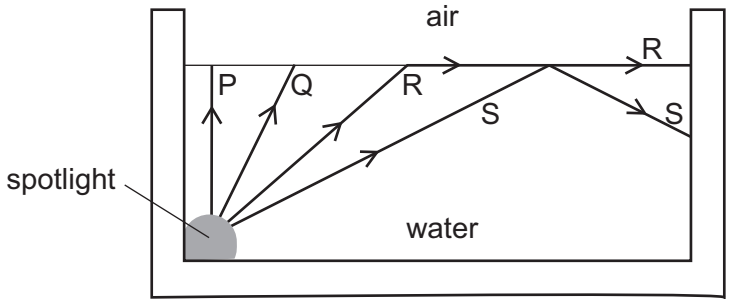

Fig. 5.1

(a) Define, in words, refractive index for a ray of light travelling from air to water.

View solution

..... [1]

(b) On Fig. 5.1, draw the path of rays P and Q at the water–air boundary. View solution [2]

(c) The angle of incidence for ray R is 49°.

Calculate the refractive index of the water.

View solution

refractive index = ... [2]

(d) Explain why ray S is totally internally reflected at the water surface.

View solution

.....

..... [2]

[Total: 7]

6 Ultrasound is an example of a longitudinal wave.

(a) Define the term ultrasound.

View solution

..... [1]

(b) Describe what is meant by a longitudinal wave.

View solution

.....

..... [1]

(c) Ultrasound is used to locate objects below the surface of the sea.

View solution

(i) Describe how ultrasound is used to locate an object below the surface of the sea.

You may draw a labelled diagram as part of your answer.

.....

.....

.....

.....

[3]

(ii) State **one** other use of ultrasound.

View solution

.....

..... [1]

[Total: 6]

7 A student sets up the circuit shown in Fig. 7.1.

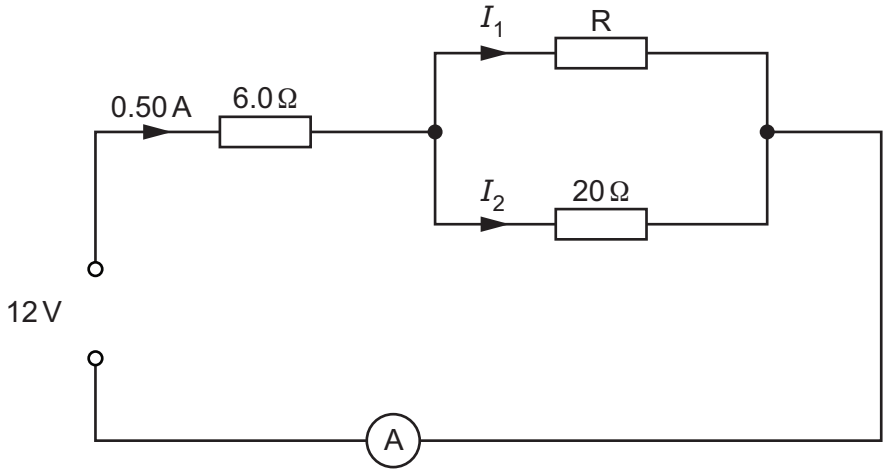

Fig. 7.1

(a) Determine the value of the current measured by the ammeter.

View solution

current = ... [1]

(b) Calculate the potential difference (p.d.) across the 6.0 Ω resistor.

View solution

p.d. = ... [2]

(c) Show that the p.d. across the 20 Ω resistor is 9.0 V.

View solution

[1]

(d) Calculate the resistance of resistor R.

View solution

resistance = ... [3]

[Total: 7]

© UCLES 2025

8 **(a)** **(i)** State what is meant by an electric field.

.....

..... [1]

(ii) Fig. 8.1 shows a negative point charge.

View solution

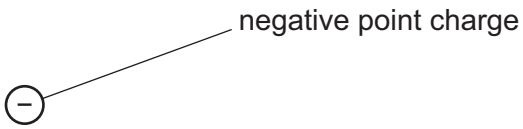

Fig. 8.1

On Fig. 8.1, draw **four** field lines to show the pattern and the direction of the electric field due to the negative point charge. [2]

(b) The potential difference (p.d.) of a lightning strike is 2.9×10^8 V. The energy transferred by the lightning strike is 4.5×10^5 MJ.

View solution

Calculate the charge that flows.

charge = ... [3]

(c) The current in a lamp is 2.0 A. The lamp is switched on for a time of 120 s.

View solution

Calculate the charge that flows.

charge = ... [2]

[Total: 8]

© UCLES 2025

9 **(a)** Fig. 9.1 shows a transformer.

View solution

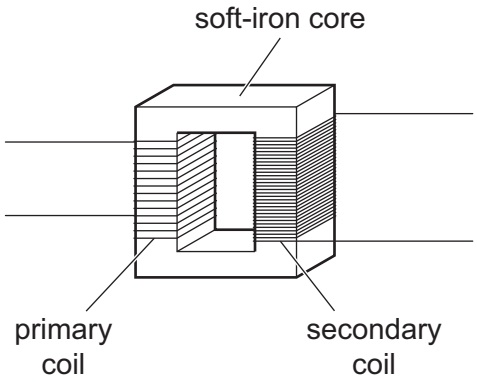

Fig. 9.1

(i) There is an alternating current in the primary coil.

Describe how an alternating current is produced in the secondary coil.

.....

.....

.....

..... [3]

(ii) A step-up transformer has a turns ratio of 1 : 20. The voltage across the primary coil is 12 V.

View solution

Calculate the voltage across the secondary coil.

voltage across secondary coil = ... [2]

(b) The power lost in a cable is 1.25×10^{-3} W. The resistance of the cable is 0.050 Ω.

View solution

Calculate the current in the cable.

current = ... [2]

© UCLES 2025

(c) State **two** advantages of high-voltage transmission.

1 .....

.....

2 .....

.....

[2]

[Total: 9]

View solution

10 **(a)** Define a light-year in words.

..... [1]

(b) It takes light 490 s to travel from the Sun to the Earth.

View solution

Calculate the distance from the Sun to the Earth.

distance = ... [2]

(c) Fig. 10.1 is a scatter graph showing how the speed of galaxies moving away from the Earth varies with their distances from the Earth.

View solution

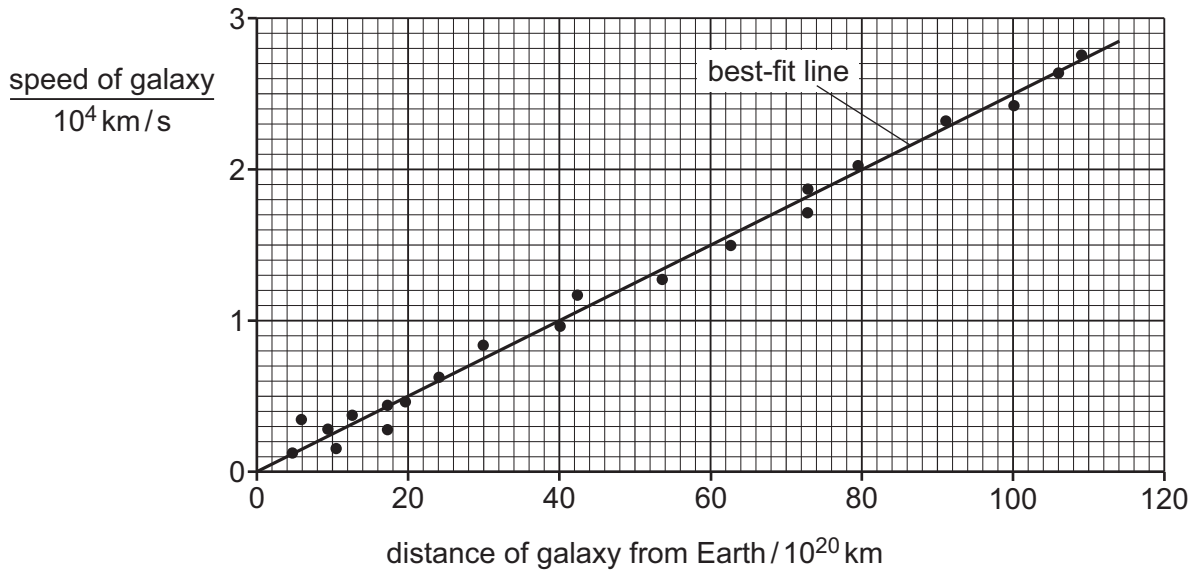

Fig. 10.1

A scientist draws a best-fit line on the scatter graph.

Use this best-fit line to determine a value for the Hubble constant.

Hubble constant = ... [3]

© UCLES 2025

(d) The speed of a receding galaxy can be estimated using redshift.

View solution

Describe what is meant by redshift.

.....

.....

.....

..... [2]

[Total: 8]

11 **(a)** Define the half-life of a radioactive source.

.....

..... [1]

(b) A protactinium (Pa) nucleus decays into a uranium (U) nucleus by the emission of a beta particle (β-particle).

View solution

(i) Complete the nuclear equation for the decay.

$$^{234}_{91}\text{Pa} \rightarrow$$

[3]

(ii) State the change that occurs in the nucleus during the decay. View solution

..... [1]

(c) A different element decays by the emission of an alpha particle (α-particle).

View solution

Give **two** reasons why α-particles are more strongly ionising than β-particles.

1 .....

.....

2 .....

.....

[2]

[Total: 7]

Permission to reproduce items where third-party owned material protected by copyright is included has been sought and cleared where possible. Every reasonable effort has been made by the publisher (UCLES) to trace copyright holders, but if any items requiring clearance have unwittingly been included, the publisher will be pleased to make amends at the earliest possible opportunity.

To avoid the issue of disclosure of answer-related information to candidates, all copyright acknowledgements are reproduced online in the Cambridge Assessment International Education Copyright Acknowledgements Booklet. This is produced for each series of examinations and is freely available to download at www.cambridgeinternational.org after the live examination series.

Cambridge Assessment International Education is part of Cambridge Assessment. Cambridge Assessment is the brand name of the University of Cambridge Local Examinations Syndicate (UCLES), which is a department of the University of Cambridge.