Cambridge Assessment International Education

Cambridge IGCSE™

CANDIDATE NAME									
CENTRE NUMBER						CANDIDATE NUMBER				

PHYSICS **0625/52**

Paper 5 Practical Test **May/June 2025**

1 hour 15 minutes

You must answer on the question paper.

You will need: The materials and apparatus listed in the confidential instructions

INSTRUCTIONS

- Answer **all** questions.
- Use a black or dark blue pen. You may use an HB pencil for any diagrams or graphs.
- Write your name, centre number and candidate number in the boxes at the top of the page.
- Write your answer to each question in the space provided.
- Do **not** use an erasable pen or correction fluid.
- Do **not** write on any bar codes.
- You may use a calculator.
- You should show all your working and use appropriate units.

INFORMATION

- The total mark for this paper is 40.
- The number of marks for each question or part question is shown in brackets [ ].

For Examiner's Use	
1	
2	
3	
4	
Total	

This document has **16** pages. Any blank pages are indicated.

© UCLES 2025

1 In this experiment, you will determine the internal diameter *d* of a boiling tube.

You are provided with an empty boiling tube held vertically in the clamp of a retort stand.

The apparatus is assembled as shown in Fig. 1.1.

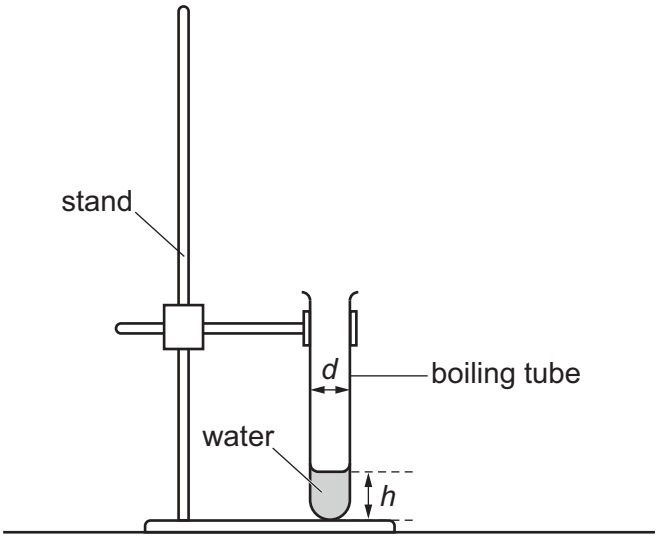

Fig. 1.1

(a) • Add water from the beaker to the measuring cylinder up to the 100 cm^3 mark.

View solution

• Add water from the measuring cylinder to the boiling tube until the boiling tube is approximately one-sixth full.

(i) Measure the height *h* of the water in the boiling tube in centimetres to the nearest millimetre.

Record your result in the top row of Table 1.1. [1]

Table 1.1

h / cm	*R* / cm^3	*V* / cm^3

(ii) Take the reading *R* of the volume of water remaining in the measuring cylinder.

View solution

Record your answer in the top row of Table 1.1. [1]

© UCLES 2025

(b) (i) • Add approximately a further 10 cm^3 of water from the measuring cylinder into the boiling tube.

• Measure the new height h of the water in the boiling tube and the reading R of the water remaining in the measuring cylinder.

View solution

Record your results in the second row of Table 1.1. [1]

(ii) Repeat **(b)(i)** three more times, so that you have **five** sets of readings in Table 1.1. [1]

(c) Calculate the volume V of water poured into the boiling tube for each different height h of water.

View solution

Use the equation $V = (100\,cm^3 - R)$.

Record your results in Table 1.1.

[1]

(d) Plot a graph of V / cm^3 (y-axis) against h / cm (x-axis). Start your axes at the origin (0, 0).

View solution

Draw the best-fit straight line.

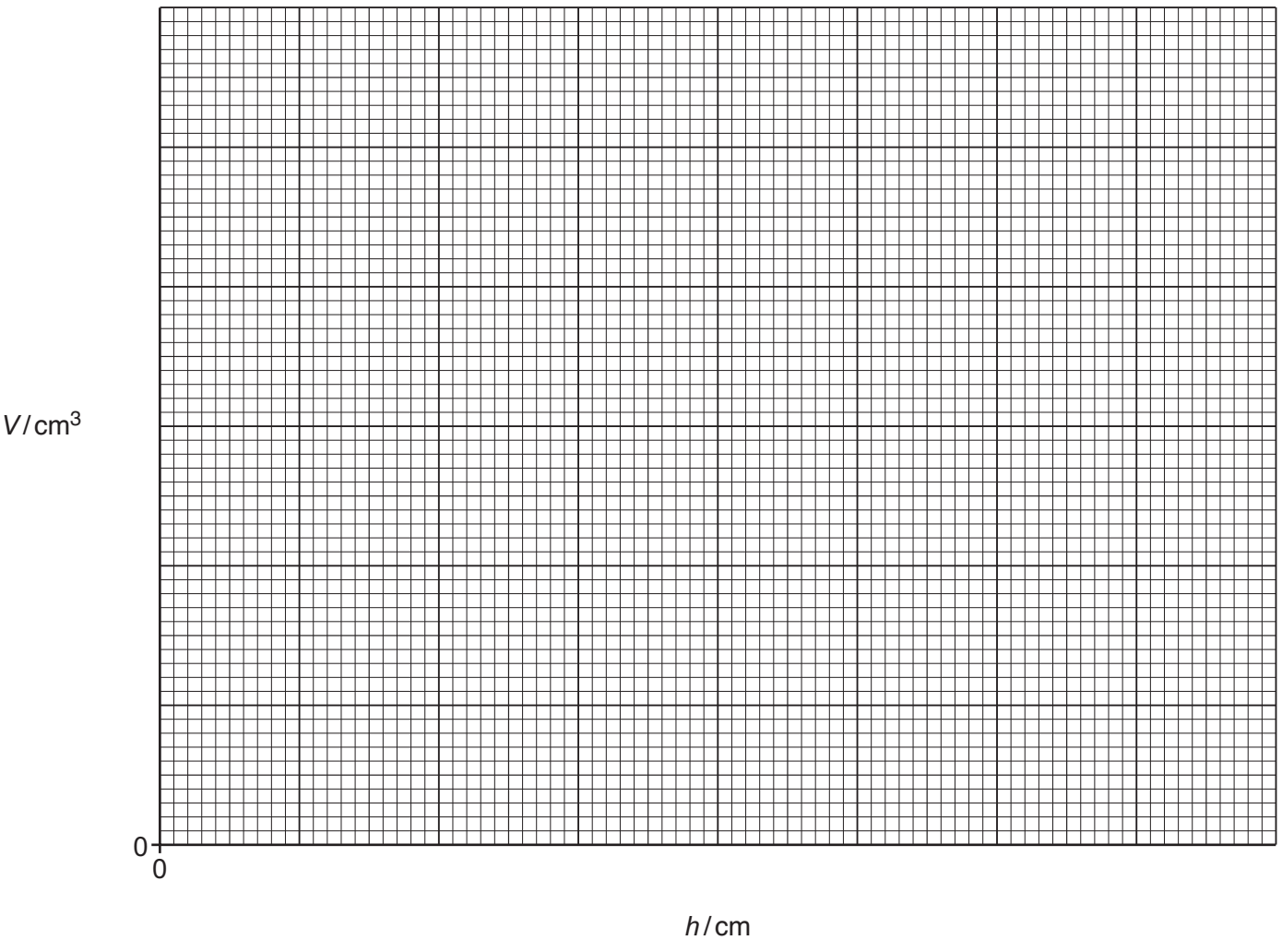

[3]

(e) Determine the gradient G of your line. Show all working and indicate on the graph the values you use.

View solution

G = ... [1]

(f) **(i)** The internal diameter d of a cylinder is given by the equation $d = k\sqrt{G}$, where $k = 1.13$ cm.

Calculate d for the boiling tube.

View solution

d = ... cm [1]

(ii) Suggest **one** reason why your calculated value for d is only approximate.

View solution

.....

..... [1]

(g) It is important to avoid line-of-sight (parallax) errors when reading the scale of the measuring cylinder.

Describe how such errors are avoided. You may draw a diagram.

View solution

.....

..... [1]

[Total: 12]

© UCLES 2025

BLANK PAGE

2 In this experiment, you will investigate a light-dependent resistor (LDR).

You are provided with a series circuit consisting of a power supply, a switch, a 470 Ω resistor and an LDR.

(a) Draw a circuit diagram of the circuit that has been set up for you. Choose symbols from the list in Fig. 2.1.

View solution

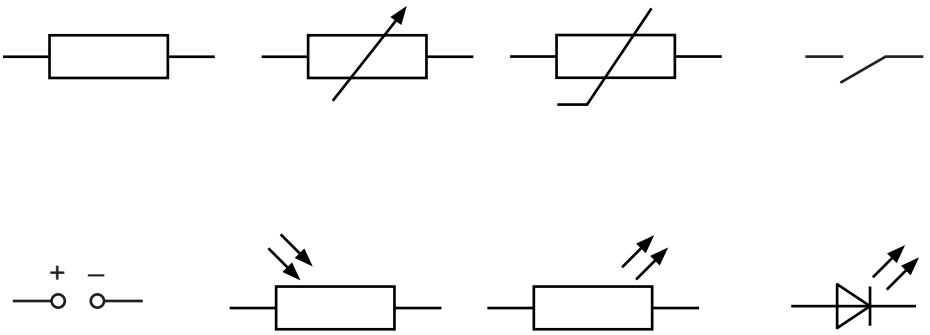

Fig. 2.1

[2]

(b) (i)
- Close the switch.
- Connect the voltmeter between points X and Y.

View solution

Record the voltmeter reading V_{XY}.

V_{XY} = ... V [1]

(ii)
- Connect the voltmeter between points Y and Z.

View solution

Record the voltmeter reading V_{YZ}.

V_{YZ} = ... V

- Open the switch. [1]

(c) **(i)** The current I in the circuit is calculated using the equation:

$$I = \frac{V_{XY}}{R},$$

where $R = 470\,\Omega$.

Use your voltmeter reading in **(b)(i)** to calculate the current I.

I = ... A [1]

(ii) The resistance of the LDR is calculated using the equation:

$$R = \frac{V_{YZ}}{I}.$$

Use your voltmeter reading in **(b)(ii)** to calculate the resistance R of the LDR.

R = ... Ω [1]

(d)
- Disconnect the voltmeter from points Y and Z.
- Place the piece of card on top of the LDR.

Repeat the measurements made in **(b)**.

V_{XY} = ... V

V_{YZ} = ... V [1]

(e)
- Ensure that the voltmeter is connected between points Y and Z.
- Close the switch.
- Hold the card horizontally about 50 cm above the LDR.
- Slowly move the card towards the LDR until it rests on top of the LDR.
- Observe the reading on the voltmeter as you move the card.

Describe your observations.

.....

.....

..... [1]

© UCLES 2025

(f) When the LDR is covered by the card, the current in the circuit changes.

Use your results in **(b)** and **(d)** to state how this change in current affects the total potential difference (V_{XY} + V_{YZ}).

View solution

.....

..... [1]

(g) Compare your value for the potential difference V_{YZ} across the LDR in bright light in **(b)** with the value for the potential difference V_{YZ} across the LDR in the dark in **(d)**.

Suggest what causes the change in the readings as the intensity of the light reaching the LDR decreases.

.....

..... [1]

[Total: 10]

View solution

BLANK PAGE

© UCLES 2025

3 In this experiment, you will investigate the image formed by a converging lens.

Refer to Fig. 3.1.

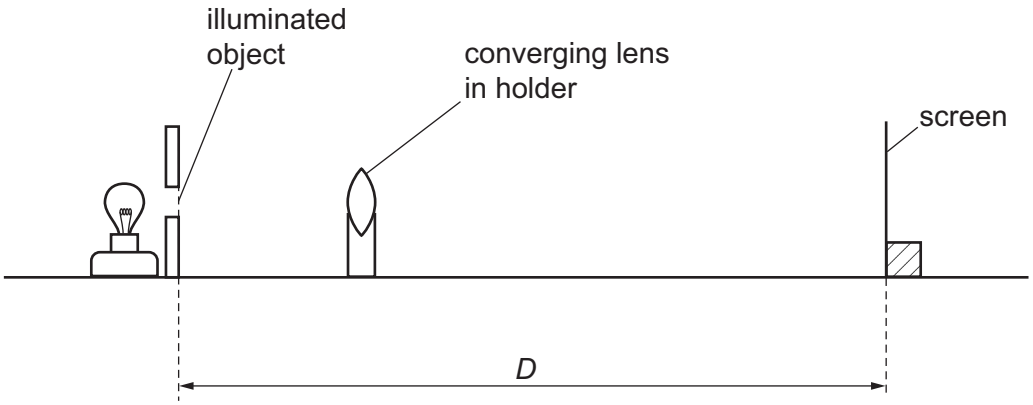

Fig. 3.1

(a) (i)
- Switch on the lamp.
- Place the screen a distance D = 80.0 cm from the illuminated object (the triangular hole in the card).
- Place the lens close to the illuminated object.
- Move the lens away from the illuminated object until a magnified, sharp image of the illuminated object is formed on the screen.
- Do **not** move the illuminated object, the lens or the screen after this image position is found.

Measure, to the nearest 0.1 cm, the object distance x_1 from the centre of the lens to the illuminated object.

x_1 = ... cm [1]

(ii) Continue to move the lens away from the illuminated object until a diminished, sharp image of the illuminated object is formed on the screen.

Measure, to the nearest 0.1 cm, the object distance y_1 from the centre of the lens to the illuminated object.

y_1 = ... cm [1]

(iii) Calculate the value $d = (y_1 - x_1)$.

View solution

d = ... cm [1]

(b) The focal length f of the lens can be found using the equation:

$$f = \frac{(D^2 - d^2)}{4D}.$$

View solution

Use the value of D from **(a)(i)** and d from **(a)(iii)** to calculate a value f_1 for the focal length of the lens.

Give your answer to a suitable number of significant figures for this experiment.

f_1 = ... cm [2]

(c) **(i)** Repeat the procedure in **(a)(i)**, **(a)(ii)** and **(a)(iii)** for an illuminated object to screen distance D = 100.0 cm.

View solution

Record your values of x_2, y_2 and d.

x_2 = ... cm

y_2 = ... cm

d = ... cm [1]

(ii) Calculate a second value f_2 for the focal length of the lens using the equation in **(b)** and your values in **(c)(i)**.

View solution

f_2 = ... cm [1]

(d) Two quantities can be considered to be equal within the limits of experimental accuracy if their values are within 10% of each other.

State whether your values of f_1 and f_2 from **(b)** and **(c)(ii)** can be considered equal.

View solution

Support your statement with a calculation.

statement .....

.....

[2]

© UCLES 2025

(e) (i) State **one** technique you use when doing the experiment to ensure that the image on the screen is focused as clearly as possible.

.....

.....

..... [1]

(ii) This experiment is usually done in a darkened room.

View solution

Explain how this makes it easier to see when the image is in focus.

.....

..... [1]

[Total: 11]

BLANK PAGE

4 Hot water is poured into a glass beaker and allowed to cool down for 5 minutes.

Plan an experiment to investigate whether the rate of cooling of the hot water depends upon the initial temperature of the hot water.

View solution

The rate of cooling of the water can be calculated using the equation:

$$\text{rate of cooling} = \frac{\text{decrease in temperature}}{\text{time taken}}.$$

You are provided with:

- a supply of cold water
- an electric kettle
- a 250 cm^3 glass beaker
- a measuring cylinder.

You may use any other common laboratory apparatus.

You are **not** required to do this investigation.

In your plan, include:

- any other apparatus needed
- a brief description of the method, including what you will measure and how you will make sure your measurements are accurate
- the variables you will control
- a results table to record your measurements (you are **not** required to enter any readings in the table)
- how you will process your results to reach a conclusion.

You may include a labelled diagram.

© UCLES 2025

.....

.....

.....

.....

.....

.....

.....

.....

.....

.....

.....

.....

.....

.....

.....

.....

.....

..... [7]

BLANK PAGE

Permission to reproduce items where third-party owned material protected by copyright is included has been sought and cleared where possible. Every reasonable effort has been made by the publisher (UCLES) to trace copyright holders, but if any items requiring clearance have unwittingly been included, the publisher will be pleased to make amends at the earliest possible opportunity.

To avoid the issue of disclosure of answer-related information to candidates, all copyright acknowledgements are reproduced online in the Cambridge Assessment International Education Copyright Acknowledgements Booklet. This is produced for each series of examinations and is freely available to download at www.cambridgeinternational.org after the live examination series.

Cambridge Assessment International Education is part of Cambridge Assessment. Cambridge Assessment is the brand name of the University of Cambridge Local Examinations Syndicate (UCLES), which is a department of the University of Cambridge.

© UCLES 2025