Cambridge Assessment International Education

Cambridge IGCSE™

CANDIDATE NAME									
CENTRE NUMBER						CANDIDATE NUMBER				

PHYSICS **0625/62**

Paper 6 Alternative to Practical **May/June 2025**

1 hour

You must answer on the question paper.

No additional materials are needed.

INSTRUCTIONS

- Answer **all** questions.
- Use a black or dark blue pen. You may use an HB pencil for any diagrams or graphs.
- Write your name, centre number and candidate number in the boxes at the top of the page.
- Write your answer to each question in the space provided.
- Do **not** use an erasable pen or correction fluid.
- Do **not** write on any bar codes.
- You may use a calculator.
- You should show all your working and use appropriate units.

INFORMATION

- The total mark for this paper is 40.
- The number of marks for each question or part question is shown in brackets [ ].

This document has **16** pages. Any blank pages are indicated.

© UCLES 2025

1 A student determines the internal diameter *d* of a test-tube.

The apparatus is assembled as shown in Fig. 1.1.

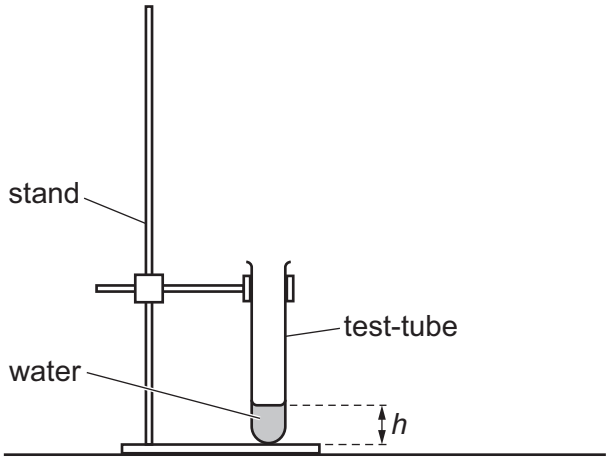

Fig. 1.1

View solution

(a) The student:

- fills a measuring cylinder with water up to the 100 cm^3 mark
- pours some water from the measuring cylinder into the test-tube.

(i) A full-size diagram of the bottom part of the test-tube is shown in Fig. 1.2.

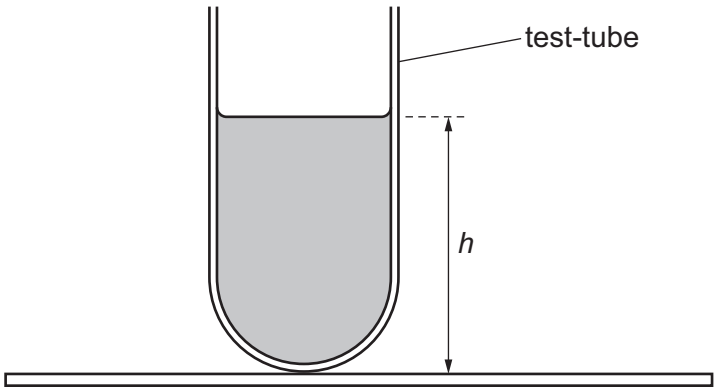

Fig. 1.2

On Fig. 1.2, measure the height *h* in centimetres to the nearest millimetre.

Record your result in the top row of Table 1.1 on page 4. [1]

© UCLES 2025

(ii) Fig. 1.3 shows the volume of water remaining in the measuring cylinder.

View solution

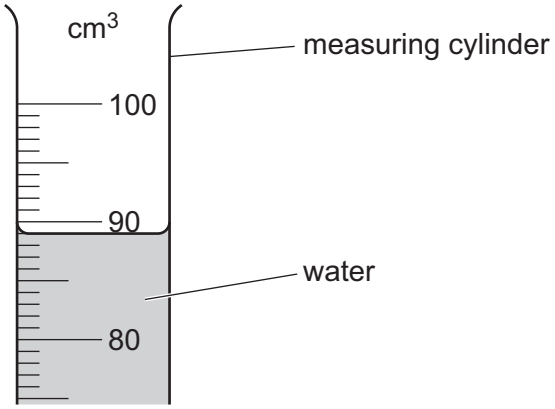

Fig. 1.3

Take the reading R of the volume of water remaining in the measuring cylinder.

Record your result in the top row of Table 1.1. [1]

(iii) Calculate the volume V of water poured into the test-tube.

View solution

Use the equation:

$$V = (100\,\text{cm}^3 - R)\,.$$

Record your result in Table 1.1. [1]

Table 1.1

h / cm	R / cm^3	V / cm^3
5.0	84	16
7.6	75	25
10.3	64	36
13.6	53	47

View solution

(b) The student:

- adds more water from the measuring cylinder into the test-tube
- measures the new height h of the water in the test-tube
- measures the new reading R of the water remaining in the measuring cylinder
- calculates the volume of water V in the test-tube
- repeats the procedure for three more values of h, R and V.

The student's results are shown in Table 1.1.

It is important to avoid line-of-sight (parallax) errors when reading the scale of the measuring cylinder.

Describe how such errors are avoided. You may draw a diagram.

.....

..... [1]

© UCLES 2025

(c) Plot a graph of V/cm^3 (y-axis) against h/cm (x-axis). Start your axes at the origin $(0, 0)$.

Draw the best-fit straight line.

View solution

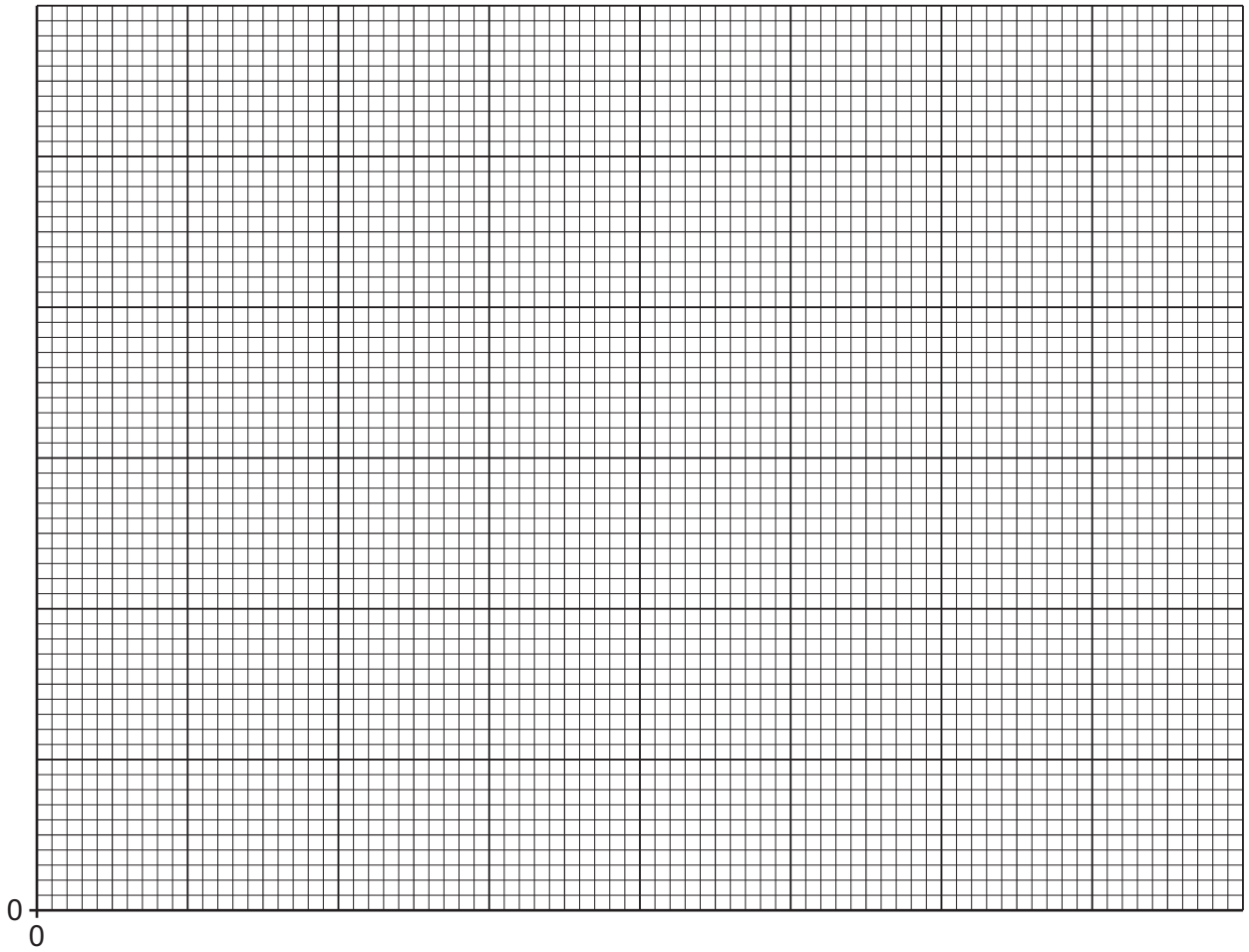

[4]

(d) Determine the gradient G of your line. Show all working and indicate on the graph the values you use.

View solution

G = ... [1]

(e) **(i)** The internal diameter d of a cylinder is given by the equation $d = k\sqrt{G}$, where $k = 1.13\,\text{cm}$.

Calculate d for the test-tube.

View solution

d = ... cm [1]

(ii) Suggest **one** reason why your calculated value for d is only approximate.

View solution

.....

..... [1]

[Total: 11]

© UCLES 2025

2 A student investigates a light-dependent resistor (LDR).

The student assembles a series circuit consisting of a power supply, a switch, a 470 Ω resistor and an LDR.

View solution

(a) Fig. 2.1 shows part of the circuit that the student assembles.

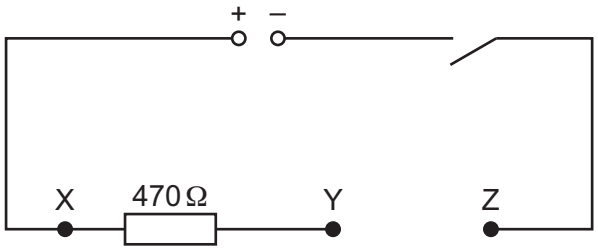

Fig. 2.1

Complete the circuit by adding the correct symbol for an LDR between Y and Z. Choose from the list provided in Fig. 2.2.

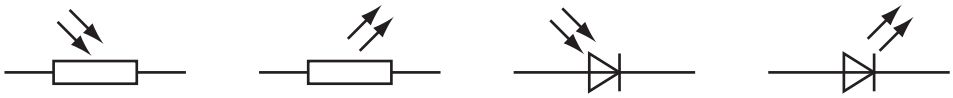

Fig. 2.2

[1]

View solution

(b) (i) The student:

- closes the switch
- connects a voltmeter across the 470 Ω resistor
- records the reading on the voltmeter
- opens the switch.

On Fig. 2.1, draw a voltmeter connected to measure the potential difference (p.d.) across the 470 Ω resistor. [1]

(ii) The voltmeter reading is shown in Fig. 2.3.

View solution

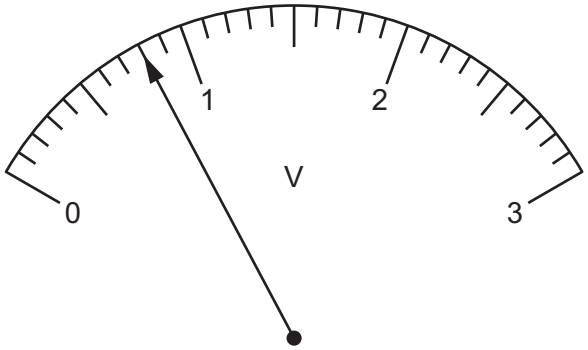

Fig. 2.3

Record the voltmeter reading V_{XY}.

V_{XY} = ... V [1]

(c) The current I in the circuit is calculated using the equation:

View solution

$$I = \frac{V_{XY}}{R},$$

where $R = 470\,\Omega$.

Use your voltmeter reading in **(b)(ii)** to calculate the current I.

I = ... [2]

(d) The student:

View solution

- closes the switch
- connects the voltmeter between points Y and Z
- records the voltmeter reading V_{YZ}
- opens the switch.

V_{YZ} = 2.2 V

Calculate the resistance R_B of the LDR in bright light using the equation:

$$R_B = \frac{V_{YZ}}{I}.$$

R_B = ... Ω [1]

© UCLES 2025

(e) (i) The student covers the LDR with a piece of card and repeats the procedure described in **(b)** and **(d)**.

V_{XY} = 0.15 V

V_{YZ} = 2.9 V

View solution

Calculate the resistance R_D of the LDR in the dark using the equation:

$$R_D = \frac{470\,\Omega \times V_{YZ}}{V_{XY}}.$$

R_D = ... Ω [1]

(ii) The student removes the card from the top of the LDR and slowly lifts it vertically upwards away from the LDR until the card is 30 cm above the LDR. The student observes and records the readings on the voltmeter across the LDR (V_{YZ}) as the card is raised.

View solution

Table 2.1 shows the student's results.

Table 2.1

distance / cm	potential difference V_{YZ} / V
0	2.9
5	2.5
10	2.4
15	2.3
20	2.2
25	2.2
30	2.2

Describe how the p.d. across the LDR (V_{YZ}) changes as the distance between the card and the LDR increases.

.....

.....

..... [2]

© UCLES 2025

(f) When the LDR is covered by the card, the current in the circuit changes.

Use the student's results from **(b)(ii)**, **(d)** and **(e)(i)** to show how this change in current affects the value of the total potential difference ($V_{XY} + V_{YZ}$).

.....

.....

..... [2]

[Total: 11]

View solution

3 A student investigates the image formed by a converging lens.

Refer to Fig. 3.1.

View solution

(a) The student:

- switches on the lamp
- places the screen a distance D = 80.0 cm from the illuminated object (a triangular hole in a piece of card)
- places the lens close to the illuminated object
- moves the lens away from the illuminated object until a magnified, inverted, sharp image of the illuminated object is formed on the screen.

Fig. 3.1 shows the position of the lens when the image is sharp.

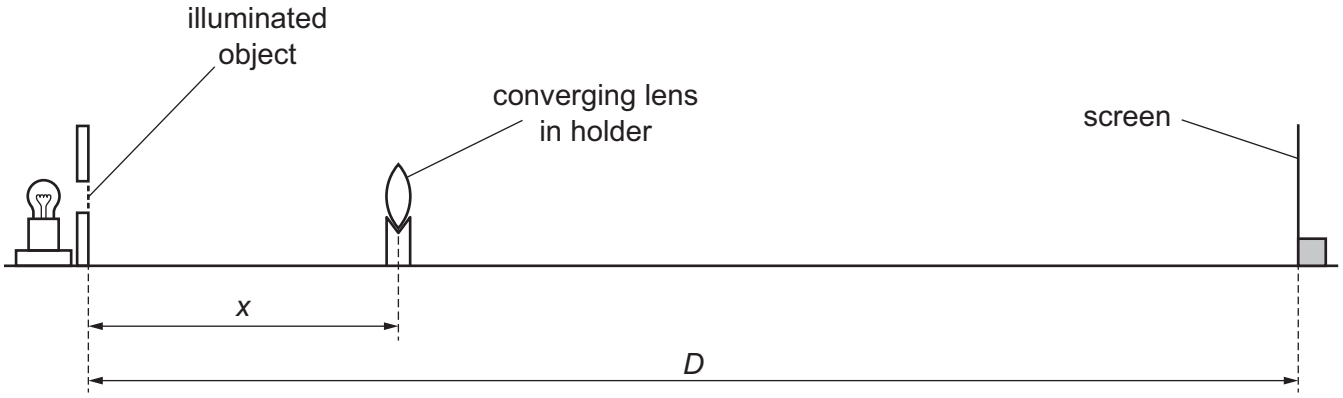

Fig. 3.1

(i) On Fig. 3.1, measure, to the nearest 0.1 cm, the object distance x from the centre of the lens to the illuminated object.

x = ... cm [1]

View solution

(ii) Fig. 3.1 is drawn to a scale of one-fifth full size.

Calculate the actual object distance X.

X = ... cm [1]

(b) The student:

- continues to move the lens away from the illuminated object until a second sharp image, which is diminished and inverted, is formed on the screen
- measures, to the nearest 0.1 cm, the object distance Y from the centre of the lens to the illuminated object.

Y = 59.8 cm

© UCLES 2025

(i) Fig. 3.2 shows the illuminated object.

View solution

On Fig. 3.2, draw a diminished, inverted image in the space provided.

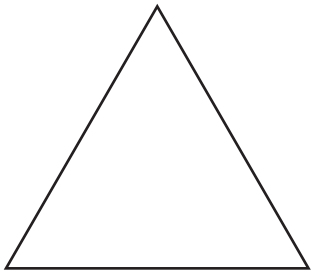

illuminated object image

Fig. 3.2

[1]

(ii) Calculate the value $d = (Y - X)$.

View solution

d = ... cm [1]

(c) The focal length f of the lens can be found using the equation:

View solution

$$f = \frac{(D^2 - d^2)}{4D}.$$

Use the value of D from **(a)** and d from **(b)(ii)** to calculate a value f_1 for the focal length of the lens.

Give your answer to 3 significant figures.

f_1 = ... cm [2]

© UCLES 2025

(d) The student repeats the procedure in **(a)** and **(b)** for an object to screen distance $D = 100.0\,\text{cm}$.

The student records the values of X, Y and d.

View solution

$X =$ 18.1 cm

$Y =$ 81.8 cm

$d =$ 63.7 cm

Calculate a second value f_2 for the focal length of the lens using the equation in **(c)**.

$f_2 =$ ..... cm [1]

(e) Two quantities can be considered to be equal within the limits of experimental accuracy if their values are within 10% of each other.

View solution

State whether your values of f_1 and f_2 from **(c)** and **(d)** can be considered equal.

Support your statement with a calculation.

statement .....

.....

[2]

© UCLES 2025

(f) **(i)** State **one** technique to use when doing this type of experiment to ensure that the image on the screen is focused as clearly as possible.

.....

.....

..... [1]

(ii) This experiment is usually done in a darkened room.

View solution

Explain how this makes it easier to see when the image is in focus.

.....

..... [1]

[Total: 11]

4 Hot water is poured into a glass beaker and allowed to cool down for 5 minutes.

Plan an experiment to investigate whether the rate of cooling of the hot water depends upon the initial temperature of the hot water.

View solution

The rate of cooling of the water can be calculated using the equation:

$$\text{rate of cooling} = \frac{\text{decrease in temperature}}{\text{time taken}}.$$

You are provided with:

- a supply of cold water
- an electric kettle
- a 250 cm^3 glass beaker
- a measuring cylinder.

You may use any other common laboratory apparatus.

In your plan, include:

- any other apparatus needed
- a brief description of the method, including what you will measure and how you will make sure your measurements are accurate
- the variables you will control
- a results table to record your measurements (you are **not** required to enter any readings in the table)
- how you will process your results to reach a conclusion.

You may include a labelled diagram.

.....

.....

.....

.....

.....

.....

.....

.....

.....

.....

.....

.....

.....

.....

.....

.....

.....

..... [7]

BLANK PAGE

Permission to reproduce items where third-party owned material protected by copyright is included has been sought and cleared where possible. Every reasonable effort has been made by the publisher (UCLES) to trace copyright holders, but if any items requiring clearance have unwittingly been included, the publisher will be pleased to make amends at the earliest possible opportunity.

To avoid the issue of disclosure of answer-related information to candidates, all copyright acknowledgements are reproduced online in the Cambridge Assessment International Education Copyright Acknowledgements Booklet. This is produced for each series of examinations and is freely available to download at www.cambridgeinternational.org after the live examination series.

Cambridge Assessment International Education is part of Cambridge Assessment. Cambridge Assessment is the brand name of the University of Cambridge Local Examinations Syndicate (UCLES), which is a department of the University of Cambridge.

© UCLES 2025