Cambridge Assessment International Education

Cambridge IGCSE™

CANDIDATE NAME									
CENTRE NUMBER						CANDIDATE NUMBER			

PHYSICS **0625/63**

Paper 6 Alternative to Practical **May/June 2025**

1 hour

You must answer on the question paper.

No additional materials are needed.

INSTRUCTIONS

- Answer **all** questions.
- Use a black or dark blue pen. You may use an HB pencil for any diagrams or graphs.
- Write your name, centre number and candidate number in the boxes at the top of the page.
- Write your answer to each question in the space provided.
- Do **not** use an erasable pen or correction fluid.
- Do **not** write on any bar codes.
- You may use a calculator.
- You should show all your working and use appropriate units.

INFORMATION

- The total mark for this paper is 40.
- The number of marks for each question or part question is shown in brackets [ ].

This document has **16** pages. Any blank pages are indicated.

© UCLES 2025

1 A student investigates the forces supporting a metre ruler to determine the weight of the metre ruler.

He uses the apparatus shown in Fig. 1.1. The scale of the metre ruler faces upwards.

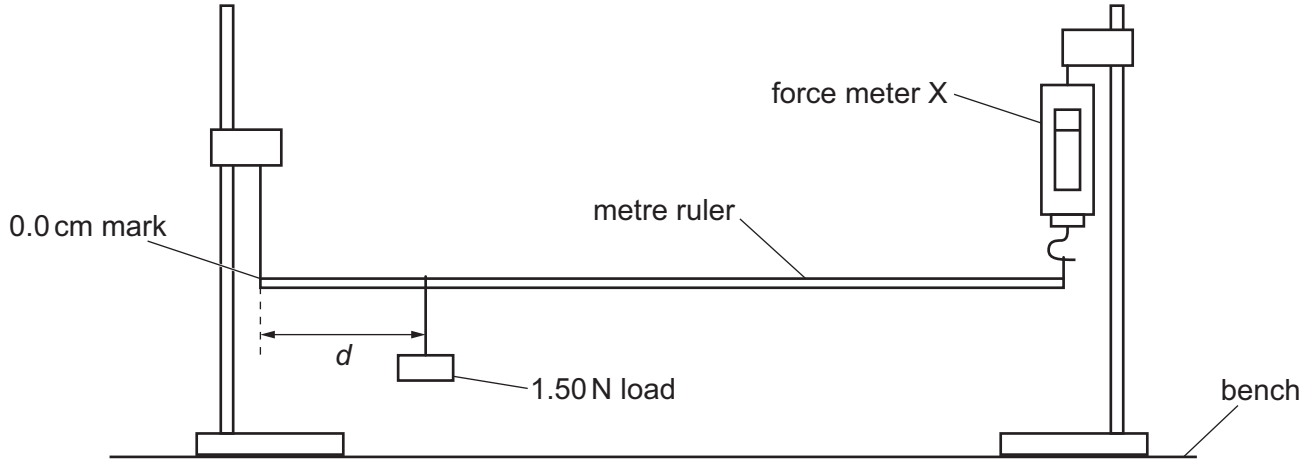

Fig. 1.1

View solution

(a) The student ensures that the metre ruler is horizontal.

Briefly describe how to check that the ruler is horizontal. You may draw a diagram.

.....

.....

..... [1]

(b) **(i)** The student adjusts distance *d* between the 0.0 cm mark and the 1.50 N load, as shown in Fig. 1.1. He moves the thread supporting the 1.50 N load so that it is at the mark on the metre ruler shown in Fig. 1.2.

View solution

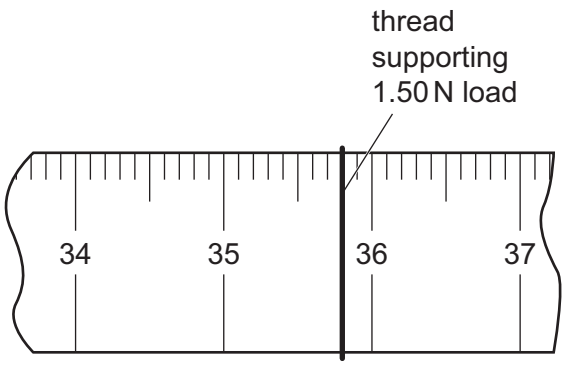

Fig. 1.2

The metre ruler is **not** drawn to scale.

Record the distance *d* indicated on Fig. 1.2.

d = ... cm [1]

(ii) The reading on force meter X is shown in Fig. 1.3.

View solution

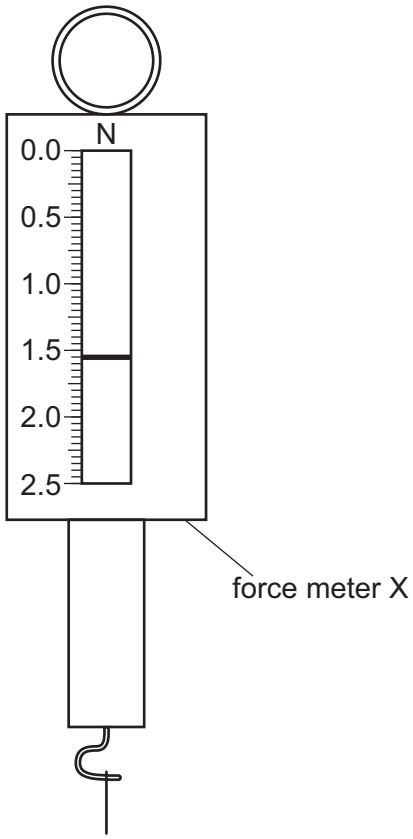

Fig. 1.3

Record F_X, the reading on force meter X shown in Fig. 1.3.

F_X = ... N [1]

(c) The student moves the 1.50 N load to distances d = 10.0 cm, 30.0 cm, 50.0 cm, 70.0 cm and 90.0 cm. For each distance d, he reads the value F_X on force meter X.



His readings are shown in Table 1.1.

Table 1.1

d / cm	F_X / N
10.0	1.17
30.0	1.40
50.0	1.82
70.0	2.15
90.0	2.35

Plot a graph of F_X / N (y-axis) against d / cm (x-axis). Start the axes at the origin (0, 0).

Draw a best-fit straight line.

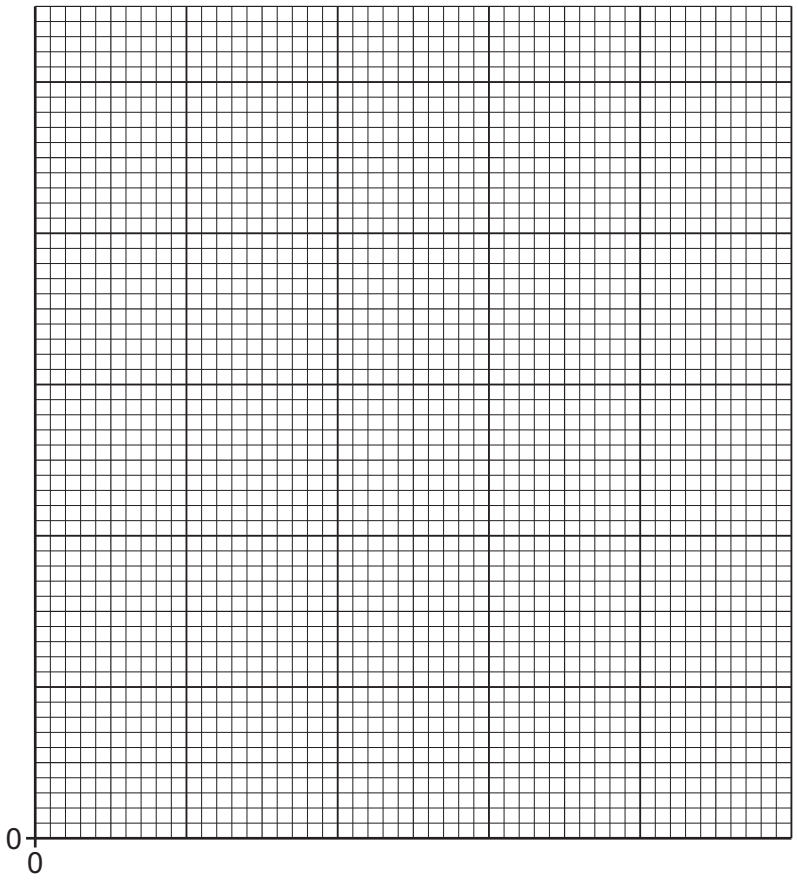

[4]

© UCLES 2025

(d) From your graph, determine F_0, the value of F_X when $d = 0.0\,\text{cm}$.

F_0 = ...

Calculate the weight W_R of the metre ruler, using the equation $W_R = 2 \times F_0$.

View solution

W_R = ... N

[2]

(e) State and explain whether your plots made it easy to choose the best-fit line. Justify your answer with reference to your plots.

View solution

statement .....

explanation .....

.....

.....

[1]

(f) Another student does the experiment with the same equipment. He reads values of F_X which are all higher than those in Table 1.1 by 0.05 N.

Suggest **one** reason for this difference. Assume that the values in Table 1.1 are accurate.

View solution

.....

.....

..... [1]

[Total: 11]

2 A student investigates the cooling of hot water in a beaker.

She uses the apparatus shown in Fig. 2.1.

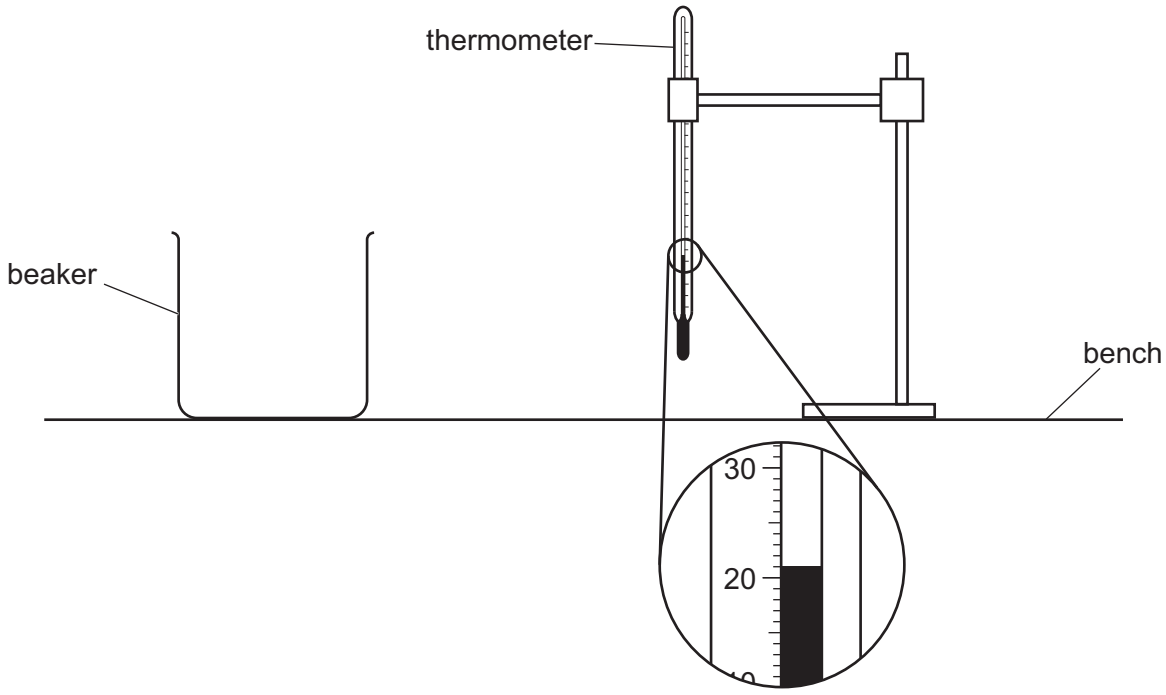

Fig. 2.1

(a) Record room temperature θ_R shown on the thermometer in Fig. 2.1.

View solution

θ_R = ... [1]

(b) The student pours hot water into the beaker and records the initial temperature θ in Table 2.1. She then records the temperature θ every 30 s. Her values are shown in Table 2.1.

Describe **one** technique that you use to ensure that temperature readings in this type of experiment are as accurate as possible.

.....

..... [1]

View solution

Table 2.1

t/s	θ/°C
0	93.0
30	90.5
60	88.5
90	87.0
120	85.5
150	84.0
180	83.0
210	82.0
240	81.5
270	81.0

(c) Estimate what the temperature θ_{300} is at 300 s. Use the readings from Table 2.1 to guide you.

View solution

θ_{300} = ... °C [1]

(d) **(i)** Calculate the average cooling rate x_1 during the first 90 s of the experiment. Use the readings from Table 2.1 and the equation:

View solution

$$x_1 = \frac{\theta_0 - \theta_{90}}{T}$$

where T = 90 s and θ_0 and θ_{90} are the temperatures at t = 0 and t = 90 s.
Include the unit for the cooling rate.

x_1 = ... [1]

(ii) Calculate the average cooling rate x_2 during the middle 90 s of the experiment. Use the readings from Table 2.1 and the equation:

View solution

$$x_2 = \frac{\theta_{90} - \theta_{180}}{T}$$

where T = 90 s and θ_{90} and θ_{180} are the temperatures at t = 90 s and t = 180 s.

x_2 = ... [1]

(iii) Calculate the average cooling rate x_3 during the last 90 s of the experiment. Use the readings from Table 2.1 and the equation:

View solution

$$x_3 = \frac{\theta_{180} - \theta_{270}}{T}$$

where T = 90 s and θ_{180} and θ_{270} are the temperatures at t = 180 s and t = 270 s.

x_3 = ... [1]

© UCLES 2025

(e) (i) Use your results from **(d)** to describe the overall pattern of the rate of cooling of the water in the experiment. Justify your answer by reference to your results.

.....

.....

..... [1]

(ii) Estimate the final temperature θ_F of the water after several hours.

View solution

θ_F = ... [1]

(f) (i) Another student does the same experiment. He starts with the hot water at a lower initial temperature.

Suggest how his cooling rates are likely to compare with those in **(b)**. Use your results to explain your answer.

suggestion .....

.....

explanation .....

.....

.....

[2]

(ii) State **one** variable, other than the initial water temperature, that the student needs to control.

.....

..... [1]

[Total: 11]

View solution

© UCLES 2025

BLANK PAGE

© UCLES 2025

3 A student investigates circuits containing different combinations of resistors.

Circuit A is shown in Fig. 3.1. Circuit A is **not** complete.

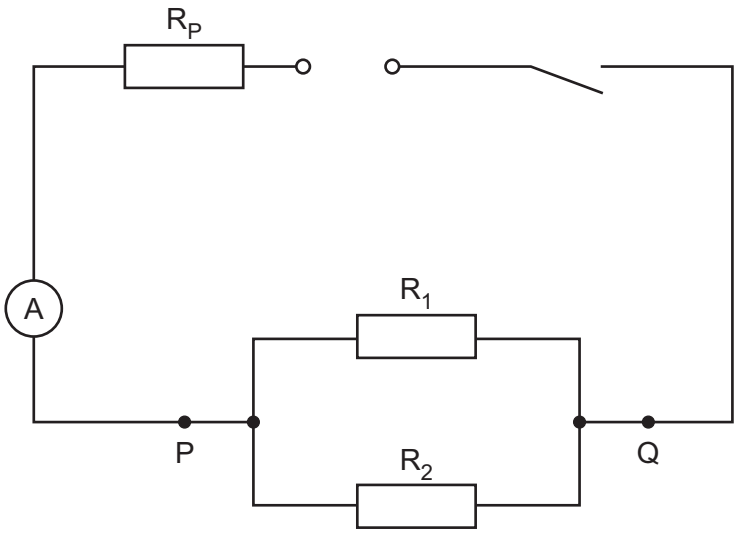

Fig. 3.1

View solution

(a) On Fig. 3.1, complete the circuit to show a voltmeter connected to measure the potential difference (p.d.) across the terminals P and Q. [1]

(b) The student measures the potential difference V across the parallel combination of resistors R_1 and R_2 and measures the current I in the circuit.

His readings are shown in Fig. 3.2 and Fig. 3.3.

View solution

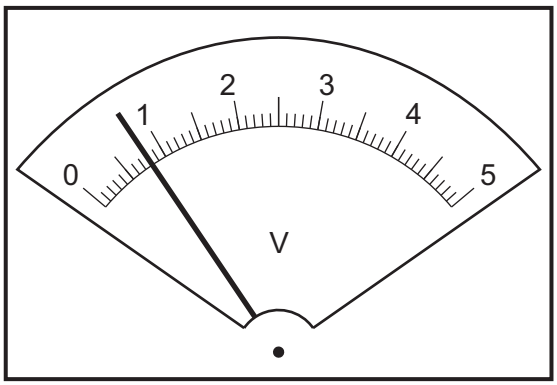

Fig. 3.2

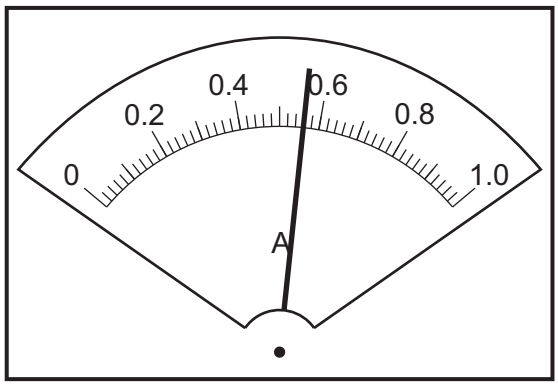

Fig. 3.3

(i) Read, and record in the first line of Table 3.1, the values of V and I shown on the meters in Fig. 3.2 and Fig. 3.3. [2]

© UCLES 2025

Table 3.1

	V/V	I/A	R/Ω
circuit A			
circuit B	1.4	0.46	
circuit C	1.8	0.29	

The student rearranges the resistors between terminals P and Q, as shown in Fig. 3.4, to form circuit B and circuit C. The new values of V and I are shown in Table 3.1.

Circuit B

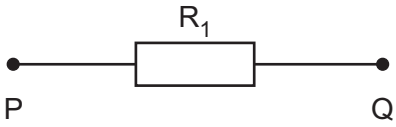

Circuit C

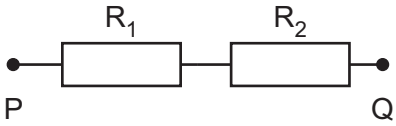

Fig. 3.4

(ii) For each circuit, calculate and record in Table 3.1 a resistance R. Use the values of V and I in Table 3.1 and the equation:

View solution

$$R = \frac{V}{I}.$$

[1]

(c) (i) Calculate resistance R_A. Use the value of R from circuit A and the equation:

View solution

$$R_A = 2R.$$

R_A = ... Ω

Record resistance R_B. R_B is equal to the value of R from circuit B.

R_B = ... Ω

Calculate resistance R_C. Use the value of R from circuit C and the equation:

$$R_C = \frac{R}{2}.$$

R_C = ... Ω

[2]

© UCLES 2025

(ii) A student suggests that R_A, R_B and R_C should all be equal.

State whether your results support this suggestion. Justify your statement with reference to values from your results.

statement .....

justification .....

.....

.....

[2]

(d) The circuits use a 3 V power supply.

View solution

Briefly explain why resistor R_P, shown in Fig. 3.1, must remain in place throughout the experiment.

R_P has a resistance of 4.0 Ω. Use Fig. 3.3 and the values in Table 3.1 to support your answer.

.....

.....

..... [1]

(e) A student determines the resistance of R_1. He uses a variable resistor in circuit B to control the current and draws a graph of V against I.

(i) Draw the circuit symbol for a variable resistor.

View solution

[1]

(ii) Briefly explain **one** advantage of using a variable resistor to control the current.

View solution

.....

.....

..... [1]

[Total: 11]

BLANK PAGE

4 A student investigates the refraction of light.

Refraction is the change in direction of a ray of light when passing into a transparent substance, as shown in Fig. 4.1.

Plan an experiment which enables him to investigate how the concentration of a gel affects the angle at which light is refracted when passing from air into the gel.

A transparent gel block can be made by dissolving gel powder in hot water in a mould and allowing it to cool. Changing the amount of powder will change the concentration.

View solution

Concentration is measured in g/cm^3.

The apparatus available includes:

- samples of gel made at different concentrations and labelled with those concentrations
- a ray-lamp which produces a narrow ray of light.

In your plan:

- list any additional apparatus needed
- explain briefly how to do the experiment, including the measurements to take
- state the key variable to keep constant
- draw a table, or tables, with column headings, to show how to display the readings (you are **not** required to enter any readings in the table)
- explain how to use the readings to reach a conclusion.

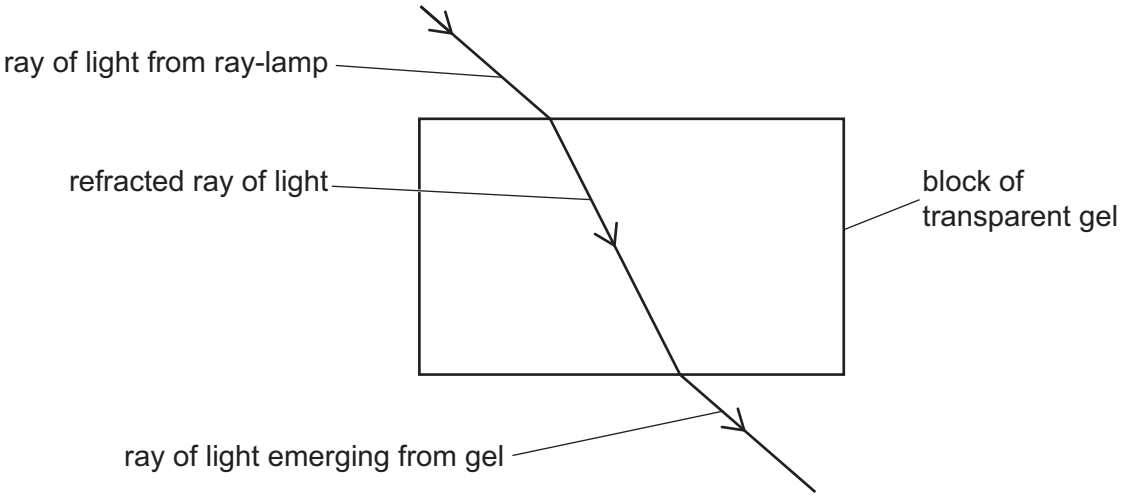

Fig. 4.1

.....

.....

.....

.....

.....

.....

.....

.....

.....

.....

.....

.....

.....

.....

.....

.....

.....

..... [7]

BLANK PAGE

Permission to reproduce items where third-party owned material protected by copyright is included has been sought and cleared where possible. Every reasonable effort has been made by the publisher (UCLES) to trace copyright holders, but if any items requiring clearance have unwittingly been included, the publisher will be pleased to make amends at the earliest possible opportunity.

To avoid the issue of disclosure of answer-related information to candidates, all copyright acknowledgements are reproduced online in the Cambridge Assessment International Education Copyright Acknowledgements Booklet. This is produced for each series of examinations and is freely available to download at www.cambridgeinternational.org after the live examination series.

Cambridge Assessment International Education is part of Cambridge Assessment. Cambridge Assessment is the brand name of the University of Cambridge Local Examinations Syndicate (UCLES), which is a department of the University of Cambridge.

© UCLES 2025