CAMBRIDGE
International Education

Cambridge IGCSE™

PHYSICS **0625/11**

Paper 1 Multiple Choice (Core) **May/June 2026**

45 minutes

You must answer on the multiple choice answer sheet.

You will need: Multiple choice answer sheet
Soft clean eraser
Soft pencil (type B or HB is recommended)

INSTRUCTIONS

- There are **forty** questions on this paper. Answer **all** questions.
- For each question there are four possible answers **A**, **B**, **C** and **D**. Choose the **one** you consider correct and record your choice in soft pencil on the multiple choice answer sheet.
- Follow the instructions on the multiple choice answer sheet.
- Write in soft pencil.
- Write your name, centre number and candidate number on the multiple choice answer sheet in the spaces provided unless this has been done for you.
- Do **not** use correction fluid or tape.
- Do **not** write on any bar codes.
- You may use a calculator.
- Take the weight of 1.0 kg to be 9.8 N (acceleration of free fall = 9.8 m / s^2).

INFORMATION

- The total mark for this paper is 40.
- Each correct answer will score one mark.
- Any rough working should be done on this question paper.

IB26 06_0625_11/3RP
© Cambridge University Press & Assessment 2026

1 A student uses a stopwatch to determine the period of oscillation of a pendulum.

View solution

The initial reading on the stopwatch is 5.64 s.

The student starts the stopwatch, and then stops it after the pendulum has completed 15 oscillations.

The final reading on the stopwatch is 25.16 s.

What is the period of oscillation of the pendulum?

A 0.38 s **B** 1.30 s **C** 1.68 s **D** 2.05 s

View solution

2 What is the definition of velocity?

A distance travelled per unit time

B distance travelled × time taken

C gradient of a distance–time graph

D speed in a given direction

View solution

3 A falling object near to the surface of the Earth has an acceleration of free fall *g*.

What is the approximate value of *g* and what is the approximate change in *g* as the object gets nearer to the Earth?

	approximate value of *g* $\frac{}{\text{m/s}^2}$	**approximate change in *g***
A	8.9	decreases
B	8.9	no change
C	9.8	decreases
D	9.8	no change

View solution

4 What is the weight of an object?

A the quantity of matter in the object

B the gravitational field strength of the object

C the gravitational force on the object

D the total energy of the object

© Cambridge University Press & Assessment 2026

5 The density of oil is $0.85\,g/cm^3$. The density of pure water is $1.00\,g/cm^3$. The density of mercury is $13.6\,g/cm^3$.

View solution

A metal object sinks in pure water and sinks in oil. The object floats in mercury.

What is the density of the metal?

A greater than $13.6\,g/cm^3$

B less than $13.6\,g/cm^3$ but greater than $1.00\,g/cm^3$

C less than $1.00\,g/cm^3$ but greater than $0.85\,g/cm^3$

D less than $0.85\,g/cm^3$

6 All the forces acting on three identical beams are shown.

View solution

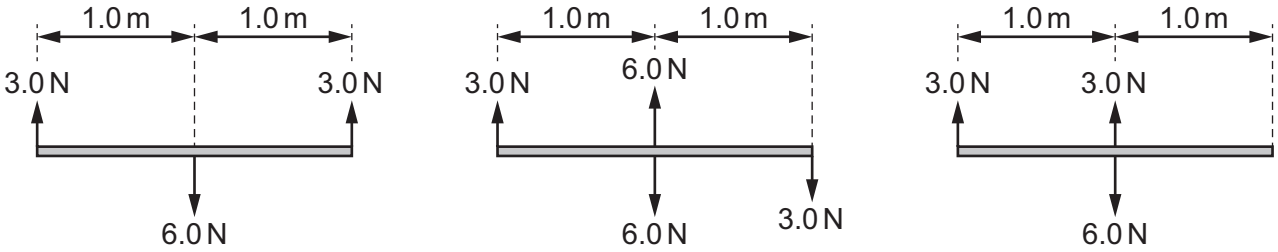

Which beams are in equilibrium?

A P and R **B** P only **C** Q and R **D** Q only

© Cambridge University Press & Assessment 2026

7 Four blocks are made of the same metal. They have the same volume and weight.

They are placed as shown in the diagrams.

The centre of gravity of each block is labelled G.

Which block is the most stable?

View solution

A

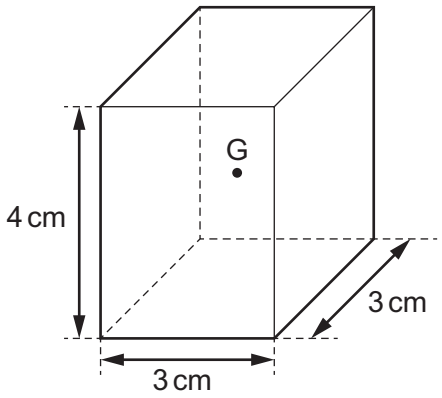

B

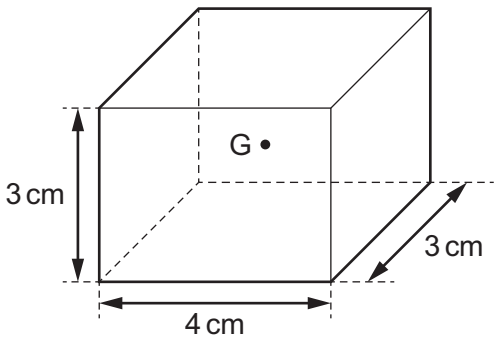

C

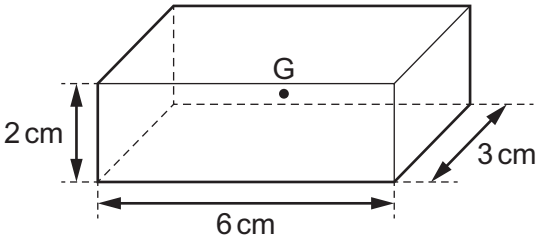

D

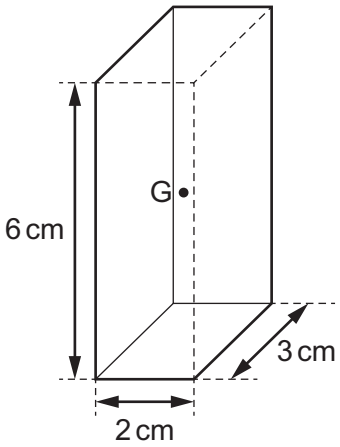

8 Which process transfers energy between stores by mechanical working?

View solution

A an electric current causing a lamp to give out light

B a stone falling from the top of a building

C light travelling from a lamp to a person's eye

D thermal energy conducted through the base of a cooking pot

© Cambridge University Press & Assessment 2026

9 A force F moves an object a distance d in the direction of the force in a time t.

View solution

How much energy is transferred?

A Fd **B** Ft **C** $\frac{Fd}{t}$ **D** $\frac{Ft}{d}$

10 A student pushes a drawing pin (thumb tack) into a notice board.

View solution

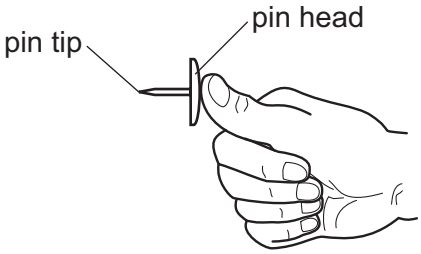

Which statement about the pin tip is correct?

A The area of the pin tip is large so that the pressure is high.

B The area of the pin tip is large so that the pressure is low.

C The area of the pin tip is small so that the pressure is high.

D The area of the pin tip is small so that the pressure is low.

© Cambridge University Press & Assessment 2026

11 Very small pollen grains are suspended in water. A bright light shines from the side.

When looked at through a microscope, small specks of light are seen to be moving in a random, jerky manner.

View solution

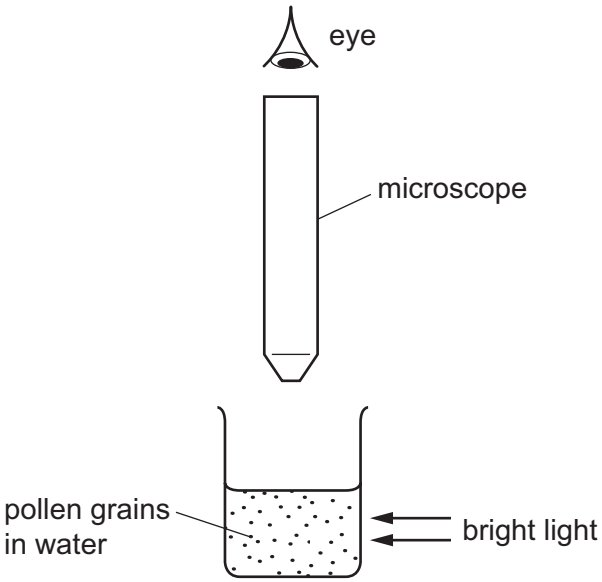

What are the moving specks of light?

A pollen grains being hit by other pollen grains

B pollen grains being hit by water molecules

C water molecules being hit by other water molecules

D water molecules being hit by pollen grains

View solution

12 Which row gives the temperature of melting ice and the temperature of boiling water?

	temperature of melting ice / K	**temperature of boiling water / K**
A	–273	–173
B	–273	373
C	273	–173
D	273	373

View solution

13 Why are small gaps left between the metal rails of a railway track?

A to allow for expansion of the rails on a hot day

B to allow for contraction of the rails on a hot day

C to allow for expansion of the rails on a cold day

D to allow for contraction of the rails on a cold day

© Cambridge University Press & Assessment 2026

14 A bicycle tyre contains air. The temperature of the air in the tyre increases.

View solution

In which store does the energy stored increase?

A chemical store

B electrostatic store

C internal store

D nuclear store

15 A student wraps cotton wool around the bulb of a thermometer. The student soaks the cotton wool briefly in alcohol that is at room temperature.

View solution

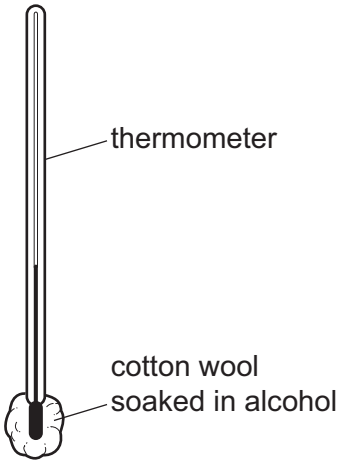

The student observes that, after the thermometer and cotton wool are removed from the alcohol, the reading on the thermometer decreases to below room temperature.

Which statement explains the decrease in temperature?

A The alcohol cools when it touches the thermometer bulb.

B The cotton wool insulates the thermometer from the warmer surroundings.

C The cotton wool is a good conductor of thermal energy.

D The most energetic alcohol molecules escape from the surface of the cotton wool.

16 A student compares three substances: air, water and wood.

View solution

In which substances is convection a possible method of thermal energy transfer?

A air and water only

B air only

C air, water and wood

D water only

© Cambridge University Press & Assessment 2026

17 Four spheres have different surface textures and colours. All of the spheres are at the same temperature.

View solution

Which sphere emits infrared radiation at the greatest rate?

	surface texture	surface colour
A	shiny	black
B	shiny	white
C	dull	black
D	dull	white

18 The diagram shows a wave. Two distances, P and Q, are labelled.

View solution

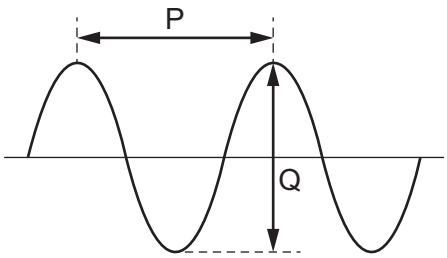

What is distance P and what is distance Q?

	distance P	distance Q
A	wavelength	amplitude
B	wavelength	double the amplitude
C	double the wavelength	amplitude
D	double the wavelength	double the amplitude

19 Sound travels through air at a speed of 340 m / s. A source generates sound waves at a frequency of 1.2 kHz.

View solution

What is the wavelength of the sound waves?

A 0.28 m **B** 3.5 m **C** 280 m **D** 410 m

© Cambridge University Press & Assessment 2026

20 The diagram shows a beam of light leaving a LASER.

View solution

Direction RS is parallel to the beam. Directions WX and YZ are perpendicular to the beam.

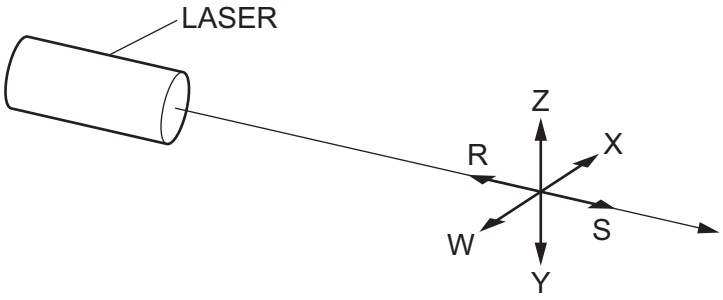

Which directions are possible vibration directions for light in the beam?

A RS, WX and YZ

B RS only

C WX and YZ only

D none of them

21 The diagram shows a ray of light incident on a plane mirror.

View solution

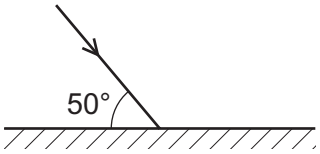

What is the angle of reflection of the ray?

A 40° **B** 50° **C** 80° **D** 130°

22 Light from the Sun passes through a converging lens and forms an image.

View solution

What is the description of the image formed?

A It is real and diminished.

B It is real and enlarged.

C It is virtual and diminished.

D It is virtual and enlarged.

© Cambridge University Press & Assessment 2026

23 Red, green and violet lights are part of the visible spectrum of light.

View solution

What is the order of colours from shortest to longest wavelength?

A red → green → violet

B red → violet → green

C violet → red → green

D violet → green → red

24 As the Universe expands, the wavelength of electromagnetic waves reaching the Earth from distant galaxies increases.

View solution

This can cause waves that are emitted in one part of the electromagnetic spectrum to be detected in another part of that spectrum.

Which change could be caused by expansion of the Universe?

A radio waves to microwaves

B microwaves to ultraviolet

C visible light to microwaves

D microwaves to gamma rays

25 The diagram represents a sound wave.

View solution

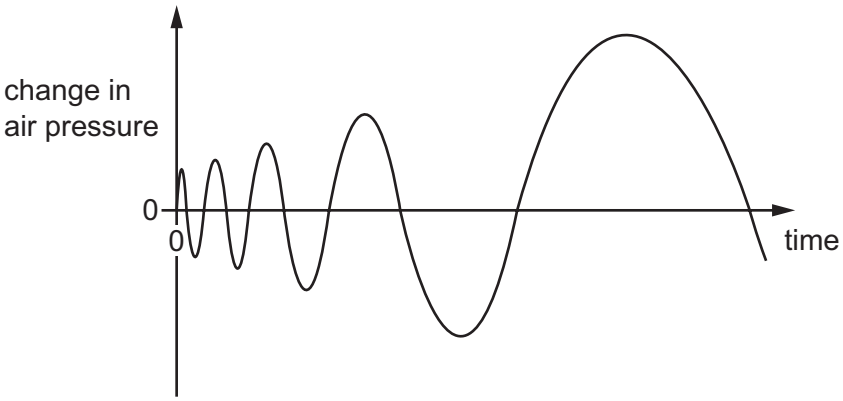

Which changes are occurring to this sound wave?

	frequency	amplitude
A	decreasing	decreasing
B	decreasing	increasing
C	increasing	decreasing
D	increasing	increasing

© Cambridge University Press & Assessment 2026

26 Two metal rods each have a painted end. The painted ends are placed next to the N pole and S pole of a bar magnet in turn.

View solution



The rods are made from iron, aluminium or magnetised steel.

rod	placed next to	observation
1	N pole of bar magnet	attracts
1	S pole of bar magnet	attracts
2	N pole of bar magnet	nothing happens
2	S pole of bar magnet	nothing happens

What are rod 1 and rod 2 made from?

	rod 1	rod 2
A	magnetised steel	aluminium
B	iron	magnetised steel
C	aluminium	iron
D	iron	aluminium

27 Which row gives the metal used to make the core of an electromagnet and one property of the electromagnet?

View solution

	metal	property
A	iron	permanent magnet
B	iron	temporary magnet
C	steel	permanent magnet
D	steel	temporary magnet

© Cambridge University Press & Assessment 2026

28 A charged metal sphere is insulated from its surroundings. It is **not** connected to a battery or power supply. A flying lead is used to connect the sphere to earth through an ammeter.

View solution

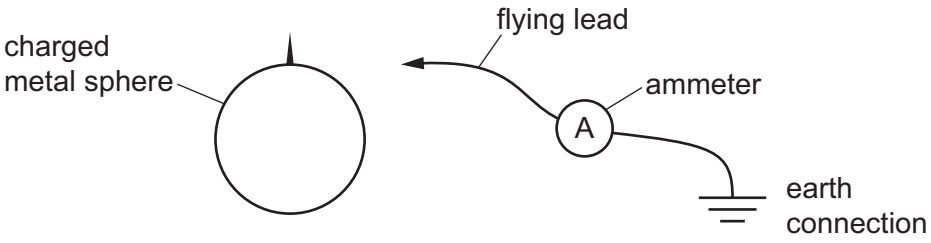

What happens to the pointer on the ammeter when the lead is connected to the sphere?

A It does **not** move.

B It deflects and then returns to zero.

C It deflects and gives a steady reading.

D It deflects to give a positive reading and then a negative reading.

29 Which apparatus is needed to measure the electromotive force (e.m.f.) of a cell?

View solution

A ammeter and force meter

B ammeter and voltmeter

C force meter only

D voltmeter only

30 A cable is used to connect an electrical device to a 240 V mains supply. The cable overheats if the current in it exceeds 40 A.

View solution

What is the maximum power of a device that can be connected to the mains supply using this cable without overheating?

A 0.17 W **B** 6.0 W **C** 280 W **D** 9600 W

© Cambridge University Press & Assessment 2026

31 The diagram shows a circuit.

View solution

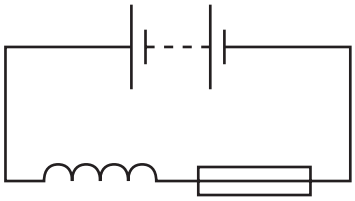

Which statement correctly describes this circuit?

A A magnetising coil is in series with a fuse.

B A transformer is in series with a fuse.

C A magnetising coil is in series with a resistor.

D A transformer is in series with a resistor.

32 A 3.0 Ω resistor and a 6.0 Ω resistor are connected in parallel.

View solution

What is the resistance of the combination?

A 2.0 Ω **B** 4.5 Ω **C** 9.0 Ω **D** 18 Ω

33 A cable connected to an electric kettle has damaged insulation. The live wire inside the cable is exposed.

View solution

What is a possible hazard of the damaged insulation?

A A person touches the exposed wire and gets an electric shock.

B The cable breaks and blows the fuse in the circuit.

C The kettle boils and injures the person.

D The kettle does **not** work if the live wire is exposed.

34 Which statement is correct for a hair dryer with a double-insulated outer casing?

View solution

A It does **not** need a fuse or an earth wire.

B It needs an earth wire but **not** a fuse.

C It needs a fuse but **not** an earth wire.

D It needs a fuse and an earth wire.

© Cambridge University Press & Assessment 2026

35 Four small compasses are placed close to a current-carrying solenoid.

In which directions do the compass needles point?

View solution

A

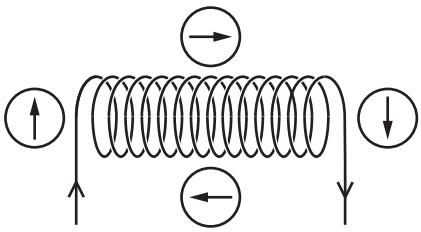

B

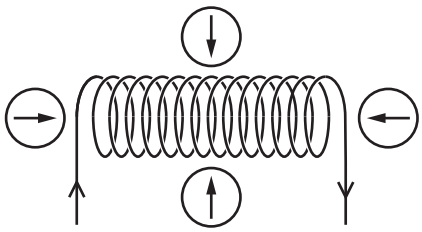

C

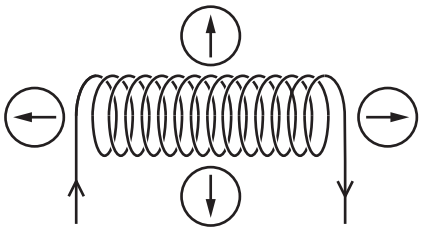

D

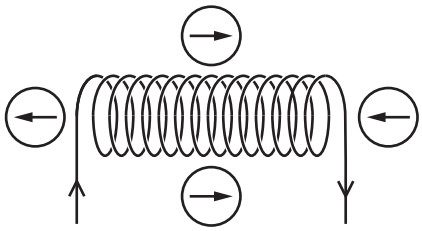

36 What is the charge on the nucleus of an atom and what is the charge on the electrons in orbit around the nucleus?

View solution

	charge on nucleus	charge on electrons
A	negative	negative
B	negative	positive
C	positive	negative
D	positive	positive

37 Some sources of background radiation are natural and other sources are due to human activity.

Which source is natural?

View solution

A medical X-rays

B nuclear weapons testing

C radioactive waste from power stations

D radon gas from rocks

© Cambridge University Press & Assessment 2026

38 Isotope X undergoes radioactive decay to produce nuclei of a different element.

View solution

Which statement about isotope X must be correct?

A It emits α-particles or γ-radiation.

B It emits α-particles or β-particles.

C It emits β-particles or γ-radiation.

D It emits γ-radiation only.

39 Which statement about the Solar System is correct?

View solution

A All the planets are rocky.

B Only the Earth has a moon.

C Pluto is a dwarf planet.

D There are many stars in the Solar System.

40 Which description of a galaxy is correct?

View solution

A a collection of billions of stars

B a collection of gaseous planets orbiting a star

C a collection of rocky planets orbiting a star

D all of the stars that exist

© Cambridge University Press & Assessment 2026

BLANK PAGE

Permission to reproduce items where third-party owned material protected by copyright is included has been sought and cleared where possible. Every reasonable effort has been made by the publisher (Cambridge University Press & Assessment) to trace copyright holders, but if any items requiring clearance have unwittingly been included, the publisher will be pleased to make amends at the earliest possible opportunity.

To avoid the issue of disclosure of answer-related information to candidates, all copyright acknowledgements are reproduced online in our Copyright Acknowledgements Booklet. This is produced for each series of examinations and is freely available to download at www.cambridgeinternational.org after the live examination series.

Cambridge International Education is the name of our awarding body and a part of Cambridge University Press & Assessment, which is a department of the University of Cambridge.

© Cambridge University Press & Assessment 2026