CAMBRIDGE
International Education

Cambridge IGCSE™

CANDIDATE NAME									
CENTRE NUMBER						CANDIDATE NUMBER				

PHYSICS **0625/31**

Paper 3 Theory (Core) **May/June 2026**

1 hour 15 minutes

You must answer on the question paper.

No additional materials are needed.

INSTRUCTIONS
- Answer **all** questions.
- Use a black or dark blue pen. You may use an HB pencil for any diagrams or graphs.
- Write your name, centre number and candidate number in the boxes at the top of the page.
- Write your answer to each question in the space provided.
- Do **not** use an erasable pen. Do **not** use correction fluid or tape.
- Do **not** write on any bar codes.
- You may use a calculator.
- You should show all your working and use appropriate units.
- Take the weight of 1.0 kg to be 9.8 N (acceleration of free fall = 9.8 m / s^2).

INFORMATION
- The total mark for this paper is 80.
- The number of marks for each question or part question is shown in brackets [ ].

This document has **16** pages. Any blank pages are indicated.

© Cambridge University Press & Assessment 2026

1 Figure 1.1 shows the speed–time graph for a person skiing.

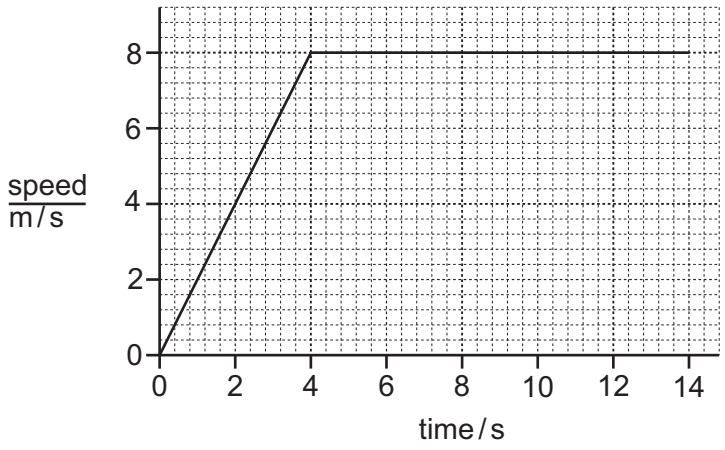

Figure 1.1

(a) Calculate the distance travelled between time = 0 and time = 4.0 s by the person skiing.

View solution

distance travelled = ... m [3]

(b) Use information from the graph in Figure 1.1 to describe the speed of the person skiing:

View solution

(i) between time = 0 and time = 4.0 s

..... [1]

(ii) between time = 4.0 s and time = 12 s.

View solution

..... [1]

(c) Another person skiing travels a distance of 220 m in a time of 20 s.

View solution

Calculate the average speed of this person.

average speed = ... m/s [3]

[Total: 8]

© Cambridge University Press & Assessment 2026

2 Figure 2.1 shows a stack of eight identical discs.

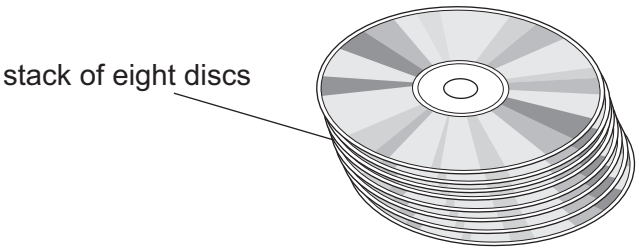

Figure 2.1

(a) Describe how to obtain a value for the average thickness of **one** disc.

View solution

.....

.....

..... [3]

(b) The mass of one disc is 24 g. The volume of the disc is 20 cm^3.

View solution

Calculate the density of the disc.

density = ... g/cm^3 [3]

[Total: 6]

© Cambridge University Press & Assessment 2026

3 Figure 3.1 shows two containers, A and B, partly filled with water.

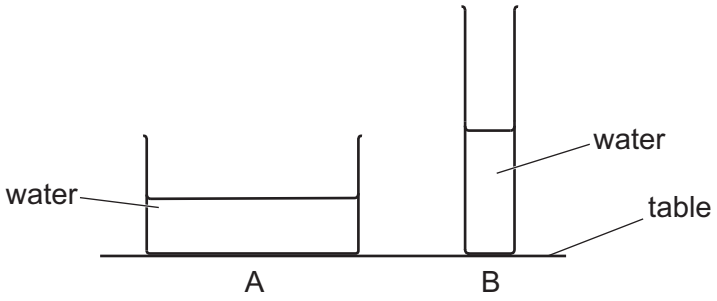

Figure 3.1

(a) Explain why container A is **more** stable than container B.

View solution

.....

..... [2]

(b) The force on the table from container B is 64 N. The area of container B in contact with the table is 12 cm^2.

Calculate the pressure on the table produced by container B.

View solution

pressure = ... N/cm^2 [3]

(c) Figure 3.2 shows a metal ball. The gravitational force on the ball is 1.2 N.
The metal ball falls into a container of oil.

View solution

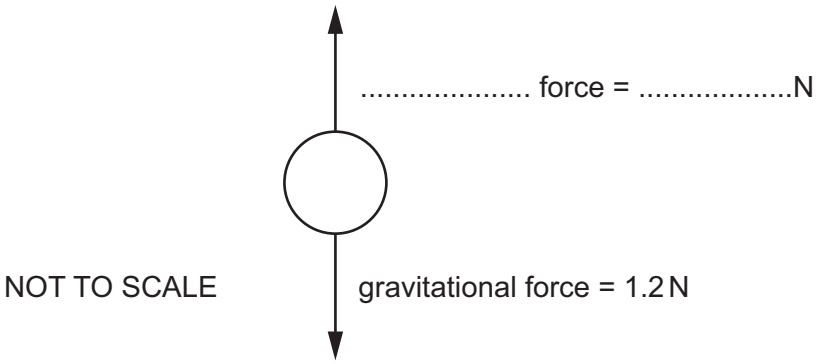

Figure 3.2

After a short time, the metal ball is falling through the oil at a constant speed.

Complete the labels on Figure 3.2 to show the forces on the metal ball as it falls at a constant speed. [2]

[Total: 7]

© Cambridge University Press & Assessment 2026

4 A student uses an electric motor to turn a wheel, as shown in Figure 4.1.

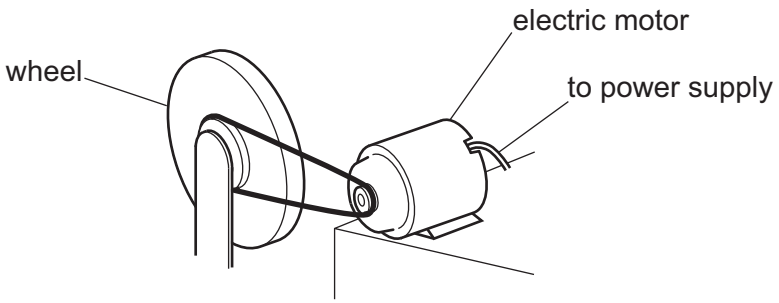

Figure 4.1

(a) (i) Give the name of the energy store that increases as the wheel turns faster.

View solution

..... [1]

(ii) The current in the motor is 1.2 A. The potential difference (p.d.) across the motor is 24 V.

Calculate the energy transferred to the motor in a time of 30 s.

View solution

energy transferred = ... J [3]

(iii) Explain **one** way in which energy is wasted as the electric motor turns the wheel.

View solution

.....

..... [2]

(b) Some power stations burn fossil fuels to generate electrical power.

View solution

(i) Describe how a power station generates electrical power by burning fossil fuels.

.....

.....

.....

..... [4]

(ii) State **two** disadvantages of generating electrical power by burning fossil fuels.

View solution

Ignore the costs of building and running the power station.

1 .....

2 .....

[2]

[Total: 12]

© Cambridge University Press & Assessment 2026

5 Figure 5.1 shows a hot-air balloon. A flame under the balloon heats the air in the balloon.

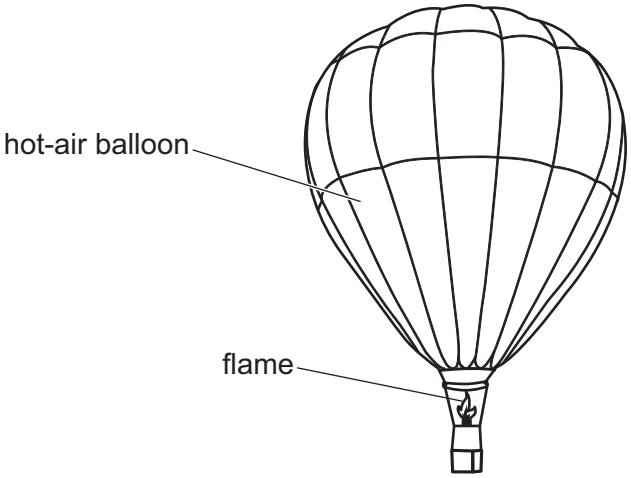

Figure 5.1

View solution

(a) Hot air inside the balloon rises to the top of the balloon.

Explain why the hot air rises.

.....

..... [2]

View solution

(b) The hot air causes a pressure on the inside of the balloon.

Explain how the hot air causes the pressure on the inside of the balloon. Use your ideas about gas particles.

.....

.....

..... [3]

View solution

(c) The temperature of the hot air above the flame is 120 °C.

Determine the value of 120 °C in kelvin.

temperature = ... K [2]

[Total: 7]

© Cambridge University Press & Assessment 2026

6 **(a)** Figure 6.1 shows the main regions of the electromagnetic spectrum in a particular order.

gamma rays	X-rays	ultraviolet light	visible light	infrared radiation	microwave radiation	radio waves

View solution

Figure 6.1

(i) Complete the sentence about a property of electromagnetic waves.

In Figure 6.1, the arrow indicates the direction of increasing ..... .

[1]

(ii) All electromagnetic waves are transverse waves.

View solution

Describe the direction of vibration in a transverse wave.

.....

..... [2]

(iii) The frequency of an electromagnetic wave is 7.3×10^{15} Hz. The speed of the wave is 3.0×10^{8} m/s.

View solution

Calculate the wavelength of the electromagnetic wave.

wavelength = ... m [3]

View solution

(b) Gamma radiation has many medical uses.

(i) State **one** medical use of gamma radiation.

..... [1]

(ii) Describe the possible harmful effects of gamma radiation on people.

..... [1]

[Total: 8]

View solution

© Cambridge University Press & Assessment 2026

7 Figure 7.1 shows a ray of red light passing through a glass prism and into the air at B.

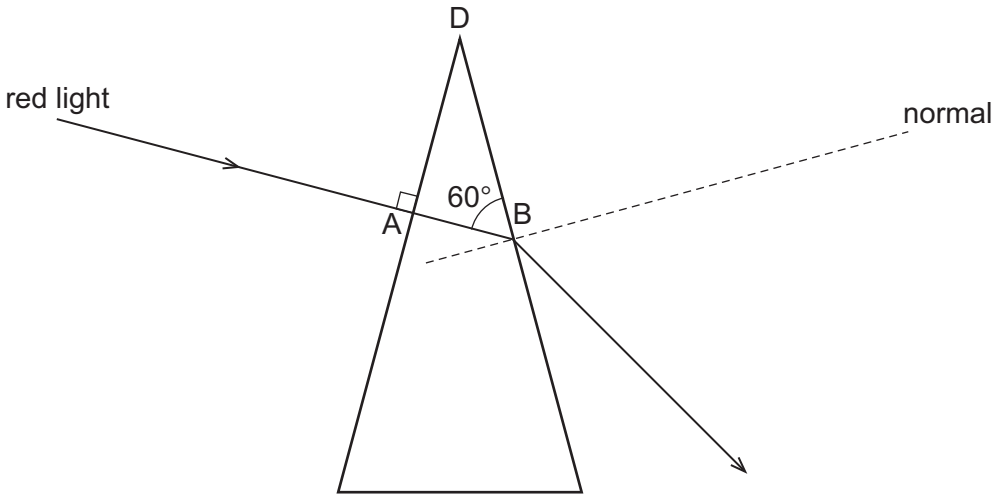

Figure 7.1

(a) **(i)** Angle ABD is 60°.

Determine the angle of incidence for the ray of red light at B.

angle of incidence = ...° [1]

(ii) On Figure 7.1, label the angle of refraction at B. Use the letter R. [1]

View solution
View solution

© Cambridge University Press & Assessment 2026

(b) The critical angle for the glass in the prism is 38°.

View solution

(i) State the meaning of critical angle.

.....

.....

..... [1]

(ii) Figure 7.2 shows the ray of red light at a different angle. This angle is **greater than** the critical angle.

View solution

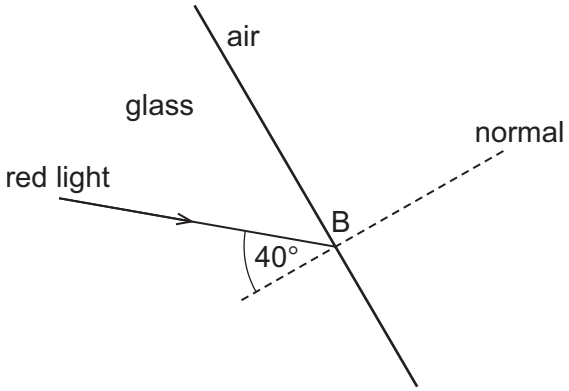

Figure 7.2

On Figure 7.2, continue the ray of red light. [1]

[Total: 4]

© Cambridge University Press & Assessment 2026

8 Figure 8.1 shows a lamp and a thermistor connected in a series circuit. The lamp is glowing with normal brightness.

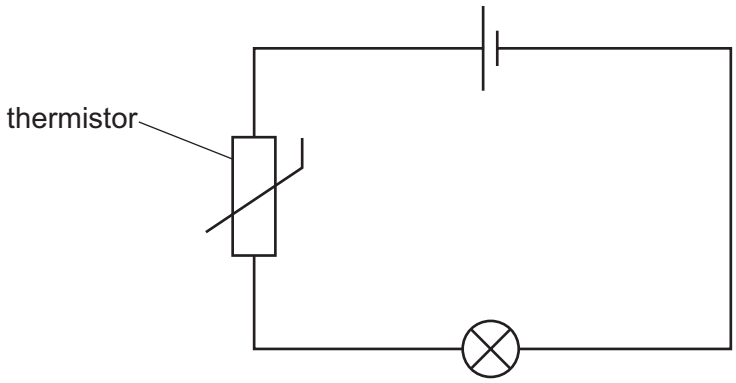

Figure 8.1

(a) A teacher uses a meter to measure the potential difference (p.d.) across the lamp.

On Figure 8.1, draw the electrical symbol for this meter and its connections in the circuit. [2]

(b) The potential difference (p.d.) across the lamp is 3.9 V. The current in the lamp is 0.60 A.

Calculate the resistance of the lamp.

resistance = ... Ω [3]

(c) The teacher moves the circuit from a warm room to a cold room.

Explain how the change in temperature affects the brightness of the lamp.

.....

.....

..... [3]

[Total: 8]

© Cambridge University Press & Assessment 2026

Turn over

© Cambridge University Press & Assessment 2026

9 **(a)** A student experiments with bar magnets. Figure 9.1 shows the magnetic field around a bar magnet.

View solution

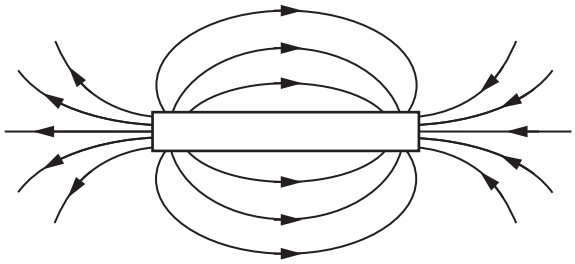

Figure 9.1

On Figure 9.1, label the N (north) pole and S (south) pole of the bar magnet. [1]

View solution

(b) The student places a bar magnet near to a soft-iron bar PQ, as shown in Figure 9.2.



Figure 9.2

Explain why the bar magnet and the soft-iron bar move towards each other.

.....

.....

..... [2]

© Cambridge University Press & Assessment 2026

(c) The student uses a bar magnet to demonstrate electromagnetic induction as shown in Figure 9.3.

View solution

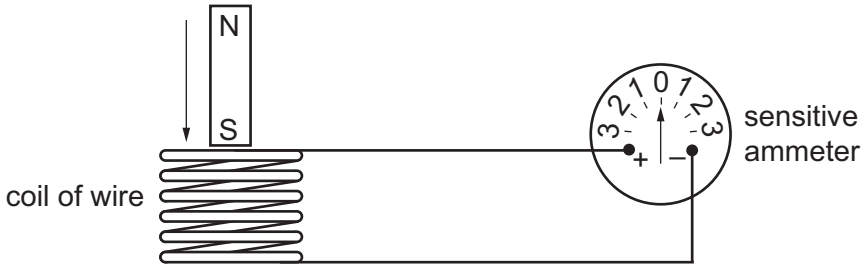

Figure 9.3

When the S pole of the bar magnet is moved into the coil of wire, the pointer on the sensitive ammeter deflects to the left.

(i) Describe **two** ways by which the student can increase the deflection to the left.

1 .....

2 .....

[2]

(ii) Describe **two** ways by which the student can make the pointer deflect to the right.

View solution

1 .....

2 .....

[2]

[Total: 7]

© Cambridge University Press & Assessment 2026

10 The nuclide notation for americium-241 is:

$$^{241}_{95}\text{Am}.$$

View solution

(a) Determine the number of:

(i) protons in **one** nucleus of americium-241

..... [1]

(ii) neutrons in **one** nucleus of americium-241.

View solution

..... [1]

(b) Americium-241 and americium-242 are isotopes of americium.

View solution

The mass number of americium-242 is 242.

Give the nuclide notation for americium-242.

Am

[1]

(c) Americium-241 decays by emitting alpha particles. Americium-242 decays by emitting beta particles.

View solution

Compare the ability of alpha particles and beta particles to penetrate paper.

.....

.....

..... [1]

[Total: 4]

© Cambridge University Press & Assessment 2026

11 **(a)** Figure 11.1 represents the Solar System.

View solution

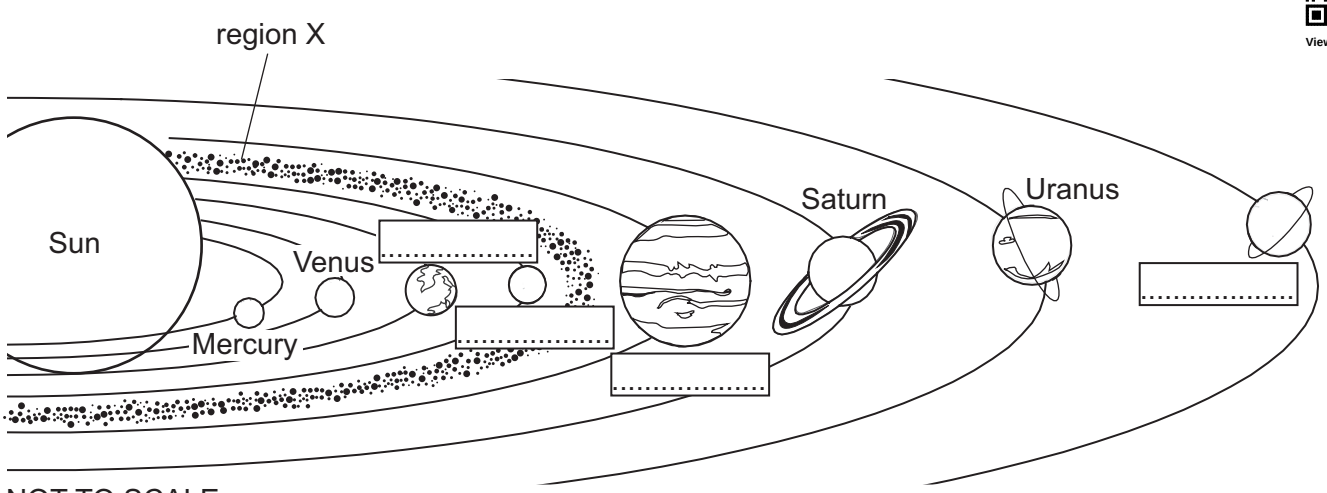

NOT TO SCALE

Figure 11.1

(i) Four of the planets are labelled.

Give the names of the other four planets. Write your answers in the boxes in Figure 11.1. [3]

(ii) Give the name of region X.

View solution

..... [1]

(iii) State the name of the force that keeps the planets in orbit around the Sun.

View solution

..... [1]

(b) Describe the evidence that supports the idea of an expanding Universe.

View solution

Use your ideas about redshift.

.....

.....

.....

.....

..... [4]

[Total: 9]

© Cambridge University Press & Assessment 2026

BLANK PAGE

Permission to reproduce items where third-party owned material protected by copyright is included has been sought and cleared where possible. Every reasonable effort has been made by the publisher (Cambridge University Press & Assessment) to trace copyright holders, but if any items requiring clearance have unwittingly been included, the publisher will be pleased to make amends at the earliest possible opportunity.

To avoid the issue of disclosure of answer-related information to candidates, all copyright acknowledgements are reproduced online in our Copyright Acknowledgements Booklet. This is produced for each series of examinations and is freely available to download at www.cambridgeinternational.org after the live examination series.

Cambridge International Education is the name of our awarding body and a part of Cambridge University Press & Assessment, which is a department of the University of Cambridge.

© Cambridge University Press & Assessment 2026