CAMBRIDGE
International Education

Cambridge IGCSE™

CANDIDATE NAME									
CENTRE NUMBER						CANDIDATE NUMBER			

PHYSICS **0625/42**

Paper 4 Theory (Extended) **May/June 2026**

1 hour 15 minutes

You must answer on the question paper.

No additional materials are needed.

INSTRUCTIONS
- Answer **all** questions.
- Use a black or dark blue pen. You may use an HB pencil for any diagrams or graphs.
- Write your name, centre number and candidate number in the boxes at the top of the page.
- Write your answer to each question in the space provided.
- Do **not** use an erasable pen. Do **not** use correction fluid or tape.
- Do **not** write on any bar codes.
- You may use a calculator.
- You should show all your working and use appropriate units.
- Take the weight of 1.0 kg to be 9.8 N (acceleration of free fall = 9.8 m / s^2).

INFORMATION
- The total mark for this paper is 80.
- The number of marks for each question or part question is shown in brackets [ ].

This document has **16** pages. Any blank pages are indicated.

© Cambridge University Press & Assessment 2026

1 **(a)** Figure 1.1 shows a speed–time graph for a car journey.

View solution

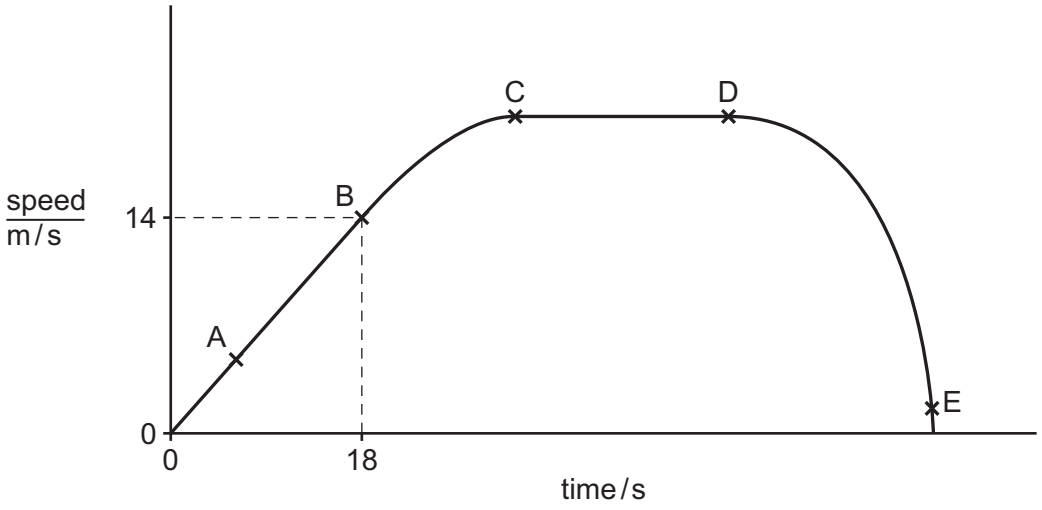

Figure 1.1

(i) State the motion of the car between:

A and B .....

C and D .....

D and E .....

[3]

(ii) Calculate the distance travelled between time = 0 and time = 18 s.

View solution

distance = ... m [2]

(b) Velocity is a vector quantity.

View solution

(i) Complete the sentence.

A vector quantity has magnitude (size) and ..... . [1]

(ii) Draw a line under each of the quantities in the list that is a vector quantity.

View solution

acceleration **electric field strength** **energy**

mass **time** **weight**

[2]

[Total: 8]

© Cambridge University Press & Assessment 2026

2 **(a)** A satellite is in a circular orbit around the Earth.

View solution

(i) State the direction of the force acting on the satellite.

..... [1]

View solution

(ii) A rocket is used to carry the satellite into space.

The initial mass of the rocket and satellite is 1.5×10^4 kg.

The initial force provided by the rocket is 1.9×10^5 N.

Calculate the initial acceleration of the rocket.

acceleration = ... m/s^2 [3]

View solution

(b) A large balloon filled with helium floats in the Earth's atmosphere.

(i) Explain, in terms of particles, how the helium gas exerts a pressure on the inside of the balloon.

.....

.....

..... [3]

View solution

(ii) The temperature of the air at the balloon's highest point above the Earth is 228 K.

Determine, in °C, the temperature of the air at this height.

temperature = ...°C [1]

[Total: 8]

© Cambridge University Press & Assessment 2026

3 Figure 3.1 shows an electric shower.

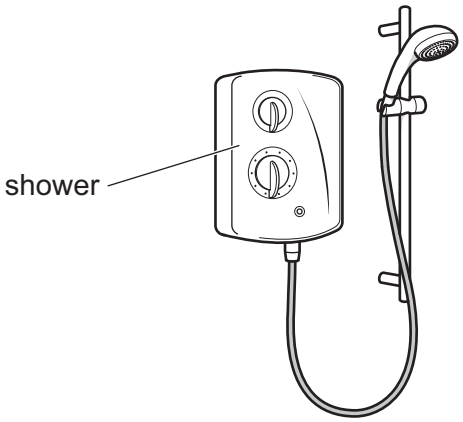

Figure 3.1

The temperature of water as it enters the shower is 15 °C. The water is heated in the shower. The water leaves the shower at a temperature of 38 °C.

View solution

(a) The density of water is 1000 kg / m^3.
The specific heat capacity of water is 4200 J / (kg °C).

(i) The water flows through the shower at a rate of 0.0045 m^3 / min.

Show that the mass of water that leaves the shower in 4.0 min is 18 kg.

[2]

(ii) Calculate the energy required to increase the temperature of 18 kg of water from 15 °C to 38 °C.

View solution

energy = ... J [2]

© Cambridge University Press & Assessment 2026

(iii) The energy in **3(a)(ii)** is transferred to the water in 4.0 min.

View solution

Calculate the power transferred to the water.

power = ... W [2]

View solution

(b) At another time, the temperature of the water leaving the shower is higher. The power supplied to the water remains constant.

Suggest **one** reason for this increase in temperature.

.....

..... [1]

[Total: 7]

© Cambridge University Press & Assessment 2026

4 **(a)** Define ‘impulse’ in words.

..... [1]

View solution

(b) A student jumps from the top of a low wall to the ground. The mass of the student is 55 kg. As the student reaches the ground, her speed is 4.6 m / s.

(i) The student stops moving 0.95 s after her feet first touch the ground.

Calculate the resultant force exerted on the student as she stops moving.

resultant force = ... N [2]

View solution

(ii) As the student lands, she bends her knees.

Explain how this prevents the student from being injured.

Use ideas about force, momentum and time in your answer.

.....

.....

..... [3]

View solution

(iii) Another student stands on the ground.

The area in contact with the ground is 380 cm^2.

The weight of the student is 530 N.

Calculate the pressure exerted by the student on the ground. State the unit.

pressure = ... unit = ... [2]

[Total: 8]

© Cambridge University Press & Assessment 2026

5 **(a)** On a hot day, a student wets his skin with cold water. The water on the student's skin evaporates.

View solution

Explain, in terms of particles, why the student's skin temperature decreases.

.....

.....

.....

.....

.....

..... [3]

(b) Figure 5.1 shows wet clothes on a line in the open air.

View solution



Figure 5.1

Water evaporates from the clothes.

State **two** factors which affect the rate of evaporation of the water.

1 .....

2 .....

[2]

[Total: 5]

© Cambridge University Press & Assessment 2026

6 **(a)** Complete the definition of the 'principal focus' of a lens.

The principal focus of a lens is a point on the principal axis where .....

.....

..... [2]

(b) Figure 6.1 is a full-scale diagram of a converging lens and an object O.

View solution

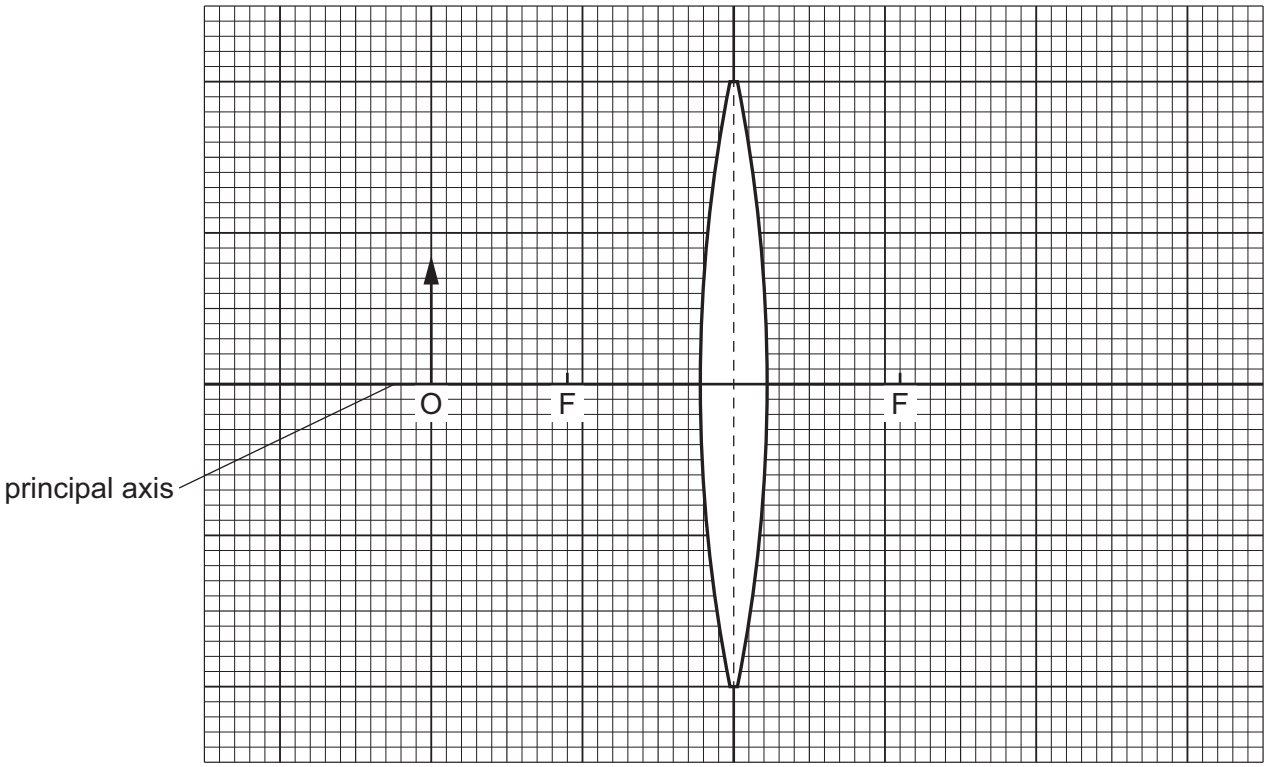

Figure 6.1

The two points labelled F show the positions of the focal points.

On Figure 6.1, draw **two** rays to locate the position of the image. Label the image I. [3]

View solution

(c) Visible light is one region of the electromagnetic spectrum.

State the name of the region of the electromagnetic spectrum which has the lowest frequency.

..... [1]

[Total: 6]

© Cambridge University Press & Assessment 2026

7 **(a)** Figure 7.1 shows a simplified diagram of a loudspeaker.

View solution

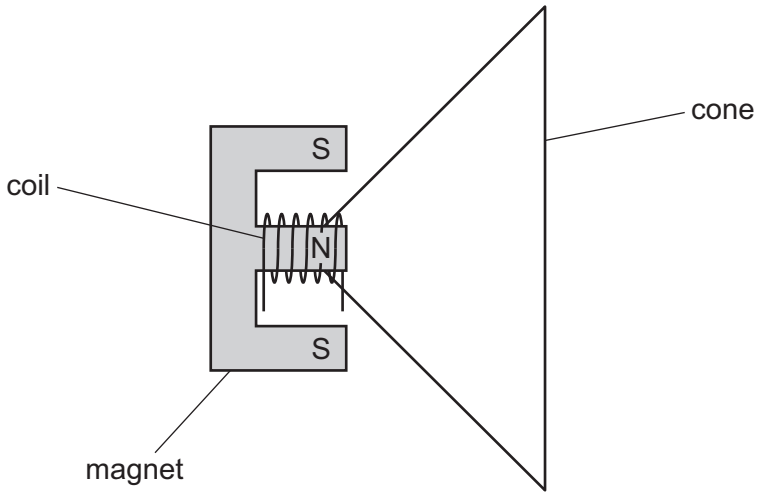

Figure 7.1

(i) Complete the sentences to describe and explain how a loudspeaker produces sound.

A changing magnetic field is produced by the ..... in the coil.

This magnetic field interacts with the magnetic field due to

the ..... .

This causes the cone to vibrate. The vibration of the .....

transfers energy to a student as sound.

[3]

(ii) A sound of frequency 440 Hz is produced by the loudspeaker. The speed of the sound is 340 m / s.

View solution

Calculate the wavelength of this sound. State the unit.

wavelength = ... unit ..... [2]

(b) Define 'ultrasound'.

View solution

.....

..... [1]

[Total: 6]

© Cambridge University Press & Assessment 2026

8 **(a)** **(i)** Complete the definition of an ‘electric field’.

View solution

An electric field is a region where .....

experiences ..... .

[2]

(ii) Figure 8.1 shows two parallel, oppositely charged metal plates.

View solution



Figure 8.1

On Figure 8.1, draw **four** field lines to show the pattern and the direction of the electric field between the two parallel plates. [2]

(b) Figure 8.2 shows an electric circuit that includes a thermistor, component X and a relay. The relay operates a lamp.

View solution

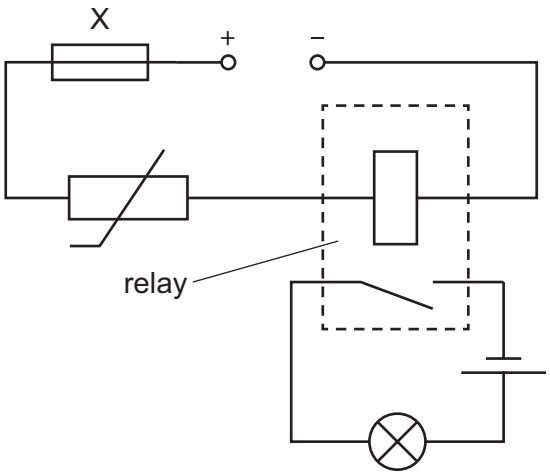

Figure 8.2

(i) Identify component X.

..... [1]

© Cambridge University Press & Assessment 2026

(ii) The temperature increases. The lamp lights.

Complete the sentences to explain, in terms of potential difference (p.d.) and resistance, why the lamp lights.

View solution

When the temperature of the thermistor increases, the .....

of the thermistor ..... . This causes the p.d. across the

..... to increase. The magnetic field produced by the relay

coil ..... . The relay coil attracts ..... ,

which causes the lamp to light.

[3]

(iii) The current in the lamp is 3.2A.

View solution

Calculate the charge that flows through the lamp in 120s.

charge = ... C [2]

[Total: 10]

© Cambridge University Press & Assessment 2026

9 **(a)** Carbon-14 is the only radioactive isotope of carbon that occurs naturally.

View solution

(i) State **one** similarity and **one** difference in the composition of the nuclei of atoms of different isotopes of the same element.

similarity .....

difference .....

[1]

View solution

(ii) When a tree dies, no new carbon-14 is absorbed by the tree.

A tree contains 16 μg of carbon-14 when it dies.

Carbon-14 has a half-life of 5700 years.

On Figure 9.1, sketch a graph to show how the mass of carbon-14 in the tree decreases during the first 15 000 years after the tree dies.

Show your working and label the axes with suitable values for **one** point on the graph.

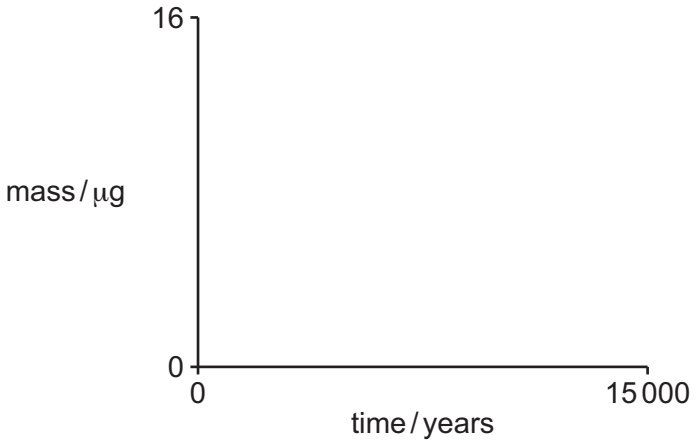

Figure 9.1

[3]

View solution

(b) Complete the sentence about radiation.

Ionising nuclear radiation that is always present in the environment is known

as ..... radiation.

[1]

(c) State **one** source that makes a significant contribution to the ionising nuclear radiation that is always present in the environment.

..... [1]

[Total: 6]

© Cambridge University Press & Assessment 2026

10 (a) Nuclear fission is the process used to transfer energy in a nuclear reactor in a power station.

(i) Describe the process which occurs when heavy nuclei undergo fission in a power station.

View solution

.....

.....

.....

.....

..... [3]

(ii) Complete the sentences to describe how energy is used to generate electricity in a nuclear power station.

View solution

Thermal energy is used to heat ..... to produce

..... at high pressure. This drives a .....

connected to a generator.

[2]

(iii) State **one** advantage and **one** disadvantage of the use of nuclear energy to generate electricity compared with the use of light from the Sun (solar cells).

View solution

advantage .....

.....

disadvantage .....

.....

[2]

(b) Radiation from the Sun is **not** the source of energy for nuclear energy.

View solution

State **one** other energy resource which does **not** have the Sun as its main source of energy.

..... [1]

[Total: 8]

© Cambridge University Press & Assessment 2026

11 **(a)** Figure 11.1 shows some statements about the Earth and the approximate time taken for the events described in these statements to take place.

View solution

statement	approximate time taken
The Earth orbits the Sun once.	8.3 minutes
The Earth rotates once on its axis.	24 hours
Light travels from the Sun to the Earth.	1 month
The Moon orbits the Earth once.	365 days

Figure 11.1

Draw a line from each statement to the correct time taken. One has been completed for you. [2]

(b) The planet Jupiter orbits the Sun. The average radius of the orbit of Jupiter is 7.78×10^8 km. The average orbital speed of Jupiter is 4.70×10^4 km / h.

View solution

Show that the orbital period of Jupiter is 11.9 years.

[3]

© Cambridge University Press & Assessment 2026

(c) (i) Define a 'light-year' in words.

.....

..... [1]

(ii) A distant galaxy is 1.6×10^{8} light-years away from the Earth.

The current estimate for the Hubble constant is 2.2×10^{-18} per second.

Calculate the speed at which this galaxy moves away from the Earth.

Give your answer in m / s.

View solution

speed = ... m / s [2]

[Total: 8]

© Cambridge University Press & Assessment 2026

BLANK PAGE

Permission to reproduce items where third-party owned material protected by copyright is included has been sought and cleared where possible. Every reasonable effort has been made by the publisher (Cambridge University Press & Assessment) to trace copyright holders, but if any items requiring clearance have unwittingly been included, the publisher will be pleased to make amends at the earliest possible opportunity.

To avoid the issue of disclosure of answer-related information to candidates, all copyright acknowledgements are reproduced online in our Copyright Acknowledgements Booklet. This is produced for each series of examinations and is freely available to download at www.cambridgeinternational.org after the live examination series.

Cambridge International Education is the name of our awarding body and a part of Cambridge University Press & Assessment, which is a department of the University of Cambridge.

© Cambridge University Press & Assessment 2026