CAMBRIDGE
International Education

Cambridge IGCSE™

CANDIDATE NAME									
CENTRE NUMBER						CANDIDATE NUMBER				

PHYSICS **0625/53**

Paper 5 Practical Test **May/June 2026**

1 hour 15 minutes

You must answer on the question paper.

You will need: The materials and apparatus listed in the confidential instructions

INSTRUCTIONS
- Answer **all** questions.
- Use a black or dark blue pen. You may use an HB pencil for any diagrams or graphs.
- Write your name, centre number and candidate number in the boxes at the top of the page.
- Write your answer to each question in the space provided.
- Do **not** use an erasable pen. Do **not** use correction fluid or tape.
- Do **not** write on any bar codes.
- You may use a calculator.
- You should show all your working and use appropriate units.

INFORMATION
- The total mark for this paper is 40.
- The number of marks for each question or part question is shown in brackets [ ].

For Examiner's Use	
1	
2	
3	
4	
Total	

This document has **12** pages. Any blank pages are indicated.

© Cambridge University Press & Assessment 2026

1 In this experiment, you will determine the density of a wooden block by two different methods.

Refer to Figure 1.1.

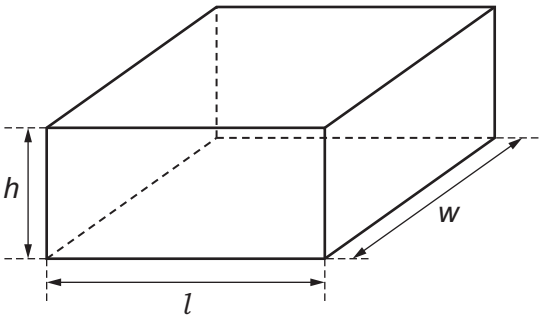

Figure 1.1

Method 1

(a) (i) Measure the length l, the width w and the height h of your wooden block in centimetres to the nearest millimetre.

l = ... cm

w = ... cm

h = ... cm [2]

(ii) Calculate the volume V_B of the wooden block. Use the equation:

$$V_B = l \times w \times h.$$

V_B = ... cm^3 [1]

(b) (i) Use the balance provided to measure the mass M of the block to the nearest gram.

M = ... g [1]

(ii) Calculate a value ρ_1 for the density of the block. Use your results from **1(a)(ii)** and **1(b)(i)** and the equation:

$$\rho_1 = \frac{M}{V_B}.$$

ρ_1 = ... g/cm^3 [1]

© Cambridge University Press & Assessment 2026

Method 2

You are provided with two beakers, X and Y. Each beaker contains 200 cm^3 of water.

You are also provided with a measuring cylinder containing water.

(c) (i) Measure the initial volume V_1 of water in the **measuring cylinder**.

View solution

V_1 = ... cm^3 [1]

(ii)
- Place the wooden block onto the surface of the water in beaker X. The level of the water in beaker X rises as the wooden block displaces water and floats.
- Place beaker Y as close as possible to beaker X.
- Slowly pour water from the measuring cylinder into beaker Y until the level of the water in beaker Y is the same as the level of the water in beaker X.

View solution

Measure the volume V_2 of water remaining in the measuring cylinder.

V_2 = ... cm^3

Determine a value for the volume V of water displaced by the block. Use the equation:

$$V = V_1 - V_2.$$

V = ... cm^3 [1]

(d) A second value ρ_2 for the density of the block can be calculated using the equation:

View solution

$$\rho_2 = \frac{kV}{V_B}$$

where $k = 1.0\,g/cm^3$.

Use your answers to **1(c)(ii)** and **1(a)(ii)** to calculate ρ_2.

ρ_2 = ... g/cm^3 [1]

© Cambridge University Press & Assessment 2026

(e) Two quantities can be considered to be equal within the limits of experimental accuracy if their values are within 10% of each other.

View solution

State whether your values of ρ_1 from method 1 and ρ_2 from method 2 can be considered equal.

Support your statement with a calculation.

calculation

statement .....

[2]

(f) State **one** technique that you use in **1(c)(ii)** of method 2 to ensure that the levels of the water in beakers X and Y are the same.

View solution

.....

..... [1]

[Total: 11]

© Cambridge University Press & Assessment 2026

2 In this experiment, you will compare the rates of temperature increase of two different coloured surfaces.

You are provided with two thermometers, one of which has a piece of white card attached to its bulb, and one of which has a piece of black card attached to its bulb. Both pieces of card are identical, except for the colour of their surfaces.

The thermometers have been clamped so that the bulb of each thermometer is level with the filament of a lamp.

The lamp is switched off.

Figure 2.1 shows the apparatus.

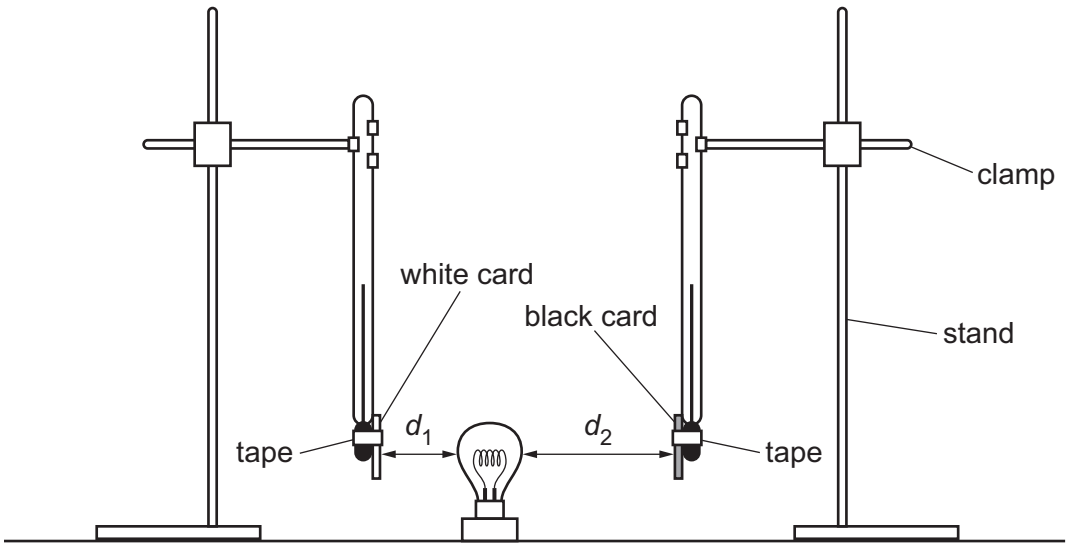

Figure 2.1

View solution

(a) • Adjust the distance d_1 between the lamp and the **white** card so that the card is 1.0 cm from the lamp.
• Adjust the distance d_2 between the lamp and the **black** card so that the card is 2.0 cm from the lamp.

(i) Record, in Table 2.1, the temperature recorded by each thermometer at time $t = 0$. [1]

(ii) • Switch on the lamp, and at the same time start the stopwatch.
• Wait for 4.0 minutes.
• Switch off the lamp.

View solution

Record, in Table 2.1, the reading on each thermometer at $t = 4.0$ min.

Table 2.1

time t/min	temperature of white card θ_W/°C	temperature of black card θ_B/°C
0		
4.0		

[2]

© Cambridge University Press & Assessment 2026

(b) (i) Determine the temperature increase $\Delta\theta$ between t = 0 and t = 4.0 min for each card.

temperature increase of white card $\Delta\theta_W$ = ... °C

temperature increase of black card $\Delta\theta_B$ = ... °C
[1]

(ii) Calculate the rate of temperature increase of each card. Use the equation:

View solution

$$\text{rate of temperature increase} = \frac{\Delta\theta}{t}.$$

Give your answers to 2 significant figures. Include the unit in your answer.

rate of temperature increase of white card = ... unit .....

rate of temperature increase of black card = ... unit .....
[3]

(c) Write a conclusion which compares the rates of temperature increase of the two different coloured cards. Justify your answer using your values from **2(b)(ii)**.

View solution

.....

.....

..... [2]

(d) The temperature of each card increases as it absorbs thermal radiation.

View solution

The procedure used does **not** produce a fair comparison of the absorbing properties of the two different coloured cards.

(i) Suggest why the procedure does **not** produce a fair comparison.

.....

.....

..... [1]

(ii) State why your conclusion in **2(c)** would be the same, even if the comparison were fair.

.....

.....

..... [1]

[Total: 11]

© Cambridge University Press & Assessment 2026

View solution

Turn over

© Cambridge University Press & Assessment 2026

3 In this experiment, you will investigate potential difference in an electric circuit and determine the resistance of an unknown resistor X.

The circuit shown in Figure 3.1 consists of a resistor X connected in series with a resistor of resistance $R = 10\,\Omega$.

This circuit has been set up for you.

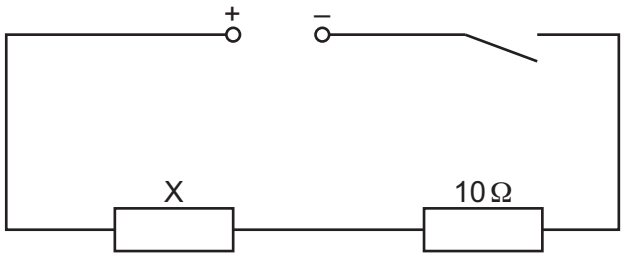

Figure 3.1

View solution

(a)
- Close the switch.
- Connect the voltmeter in parallel with resistor X.
- Record, in Table 3.1, the potential difference (p.d.) V across resistor X.
- Open the switch.

Table 3.1

resistance R/Ω	p.d. V/V	$\frac{1}{V}$/$\frac{1}{\text{V}}$
10		
15		
18		
22		
33		

[1]

View solution

(b) Remove the 10 Ω resistor from the circuit.

Repeat **3(a)** by replacing the 10 Ω resistor with resistors of resistance $R = 15\,\Omega$, 18 Ω, 22 Ω and 33 Ω in turn. [2]

View solution

(c) Calculate the value of $\frac{1}{V}$ for each value of V.

Record your values of $\frac{1}{V}$ in Table 3.1 to 2 significant figures. [2]

© Cambridge University Press & Assessment 2026

(d) Plot a graph of $\frac{1}{V}\Big/\frac{1}{\text{V}}$ (y-axis) against R/Ω (x-axis). Start your axes at the origin (0,0). Draw a best-fit straight line.

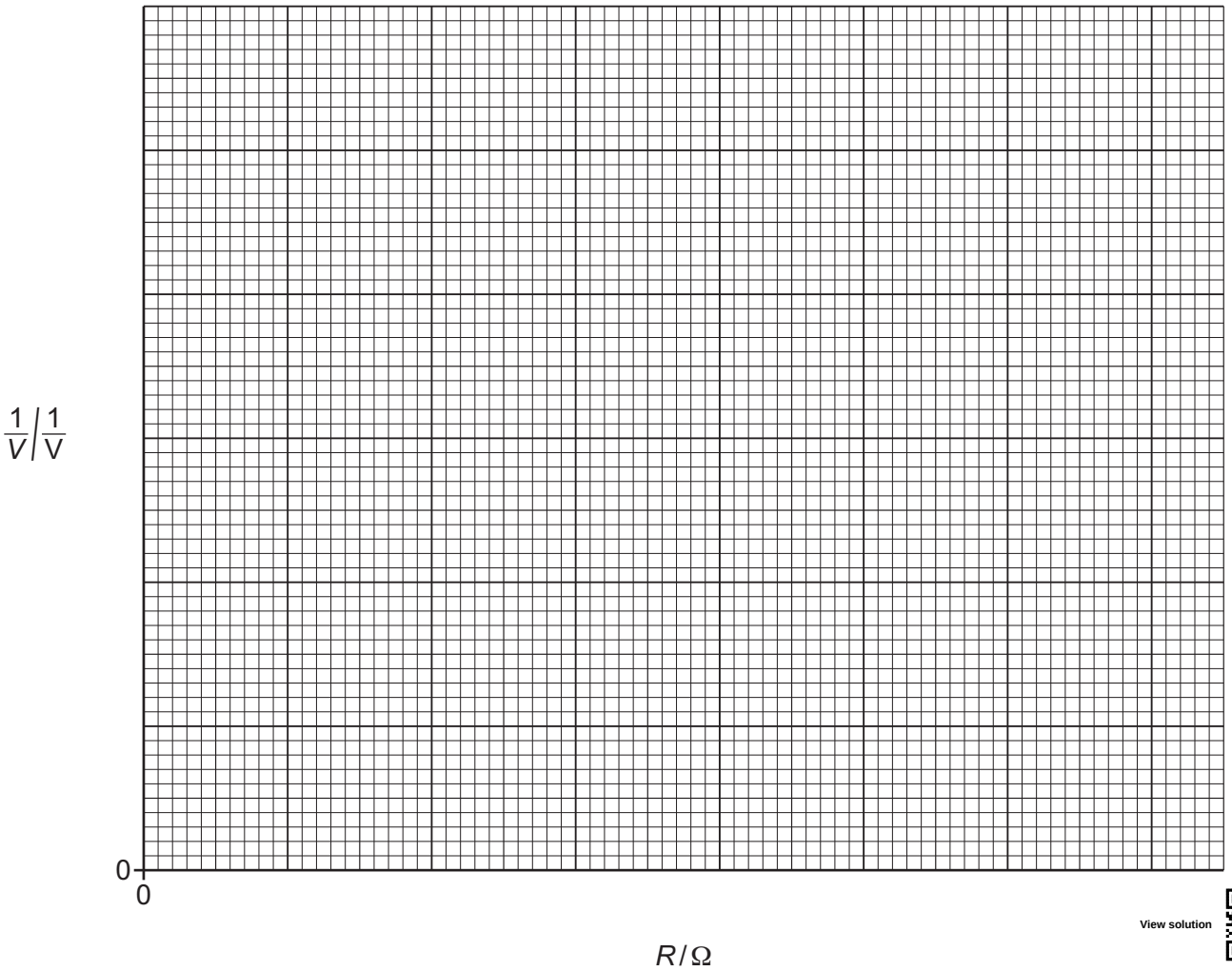

View solution

[3]

(e) Determine the gradient G of your line. Show all your working and indicate on the graph the values you use.

View solution

G = ... [1]

(f) Extend your line so that it meets the y-axis. Record the intercept c that your line makes with the y-axis.

View solution

c = ... [1]

(g) The resistance R_X of resistor X can be calculated using the equation: $R_X = \frac{c}{G}$.
Use your answers to **3(e)** and **3(f)** to calculate R_X. Record your answer to the nearest ohm.

View solution

R_X = ... Ω [1]

[Total: 11]

© Cambridge University Press & Assessment 2026

4 A student:

View solution

- fills a tall glass cylinder with oil
- holds a small metal ball some distance above the surface of the oil
- releases the ball from rest.

The student investigates the time *t* taken for the metal ball to fall between two lines marked on the side of the cylinder.

Plan an experiment to investigate how **one** variable affects the time *t* for this oil.

The arrangement of the apparatus is shown in Figure 4.1.

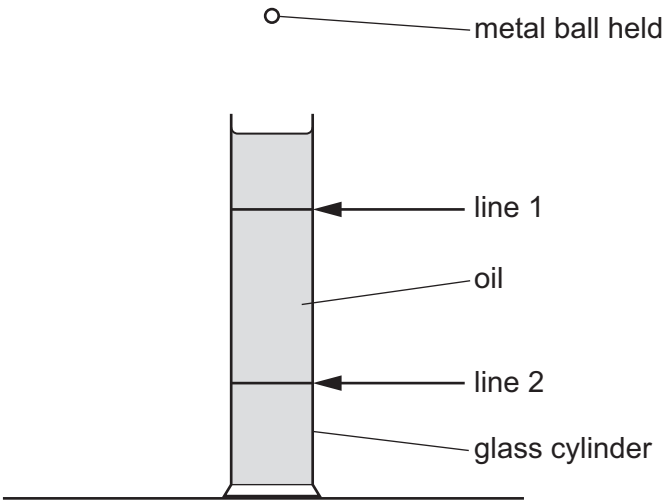

Figure 4.1

The apparatus available includes:

- a glass cylinder containing oil
- a selection of different metal balls
- a ruler.

You are **not** required to do this experiment.

In your plan:

- state the **one** variable you have chosen to investigate
- name any other apparatus needed
- give a brief description of the method, including what you will measure
- state the key variables to be kept constant
- draw a table, with column headings, to show how to display the readings (you are **not** required to enter any readings in the table)
- explain how to use the readings to reach a conclusion.

© Cambridge University Press & Assessment 2026

.....

.....

.....

.....

.....

.....

.....

.....

.....

.....

.....

.....

.....

.....

.....

.....

.....

..... [7]

© Cambridge University Press & Assessment 2026

BLANK PAGE

Permission to reproduce items where third-party owned material protected by copyright is included has been sought and cleared where possible. Every reasonable effort has been made by the publisher (Cambridge University Press & Assessment) to trace copyright holders, but if any items requiring clearance have unwittingly been included, the publisher will be pleased to make amends at the earliest possible opportunity.

To avoid the issue of disclosure of answer-related information to candidates, all copyright acknowledgements are reproduced online in our Copyright Acknowledgements Booklet. This is produced for each series of examinations and is freely available to download at www.cambridgeinternational.org after the live examination series.

Cambridge International Education is the name of our awarding body and a part of Cambridge University Press & Assessment, which is a department of the University of Cambridge.

© Cambridge University Press & Assessment 2026