CAMBRIDGE
International Education

Cambridge IGCSE™

CANDIDATE NAME									
CENTRE NUMBER						CANDIDATE NUMBER			

PHYSICS **0625/63**

Paper 6 Alternative to Practical **May/June 2026**

1 hour

You must answer on the question paper.

No additional materials are needed.

INSTRUCTIONS

- Answer **all** questions.
- Use a black or dark blue pen. You may use an HB pencil for any diagrams or graphs.
- Write your name, centre number and candidate number in the boxes at the top of the page.
- Write your answer to each question in the space provided.
- Do **not** use an erasable pen. Do **not** use correction fluid or tape.
- Do **not** write on any bar codes.
- You may use a calculator.
- You should show all your working and use appropriate units.

INFORMATION

- The total mark for this paper is 40.
- The number of marks for each question or part question is shown in brackets [ ].

This document has **16** pages. Any blank pages are indicated.

© Cambridge University Press & Assessment 2026

1 A student has five identical coins.

The student measures the density of one of these coins by two different methods.

Method 1

(a) (i) The student measures the mass m_1 of **one** coin.

View solution

The reading on the balance is shown in Figure 1.1.

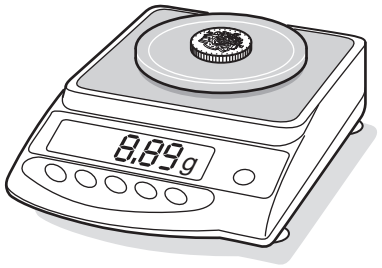

Figure 1.1

Record the mass of the coin to **two** significant figures.

m_1 = ... g [1]

(ii) The student slowly lowers the five coins into a measuring cylinder until they are completely covered with water.

View solution

Figure 1.2 shows the initial volume of water in the measuring cylinder.

Figure 1.3 shows the final reading on the measuring cylinder after the coins have been lowered in.

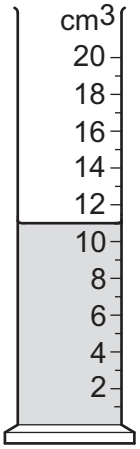

Figure 1.2

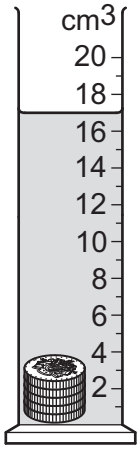

Figure 1.3

Record the initial and final readings on the measuring cylinder.

initial reading = ... cm^3

final reading = ... cm^3

[1]

© Cambridge University Press & Assessment 2026

(iii) Calculate the volume V_1 of **one** coin. Use your values from **1(a)(ii)** and the equation:

View solution

$$V_1 = \frac{\text{final reading} - \text{initial reading}}{5}.$$

V_1 = ... cm^3 [1]

(iv) Describe **one** technique for measuring the volume of water in the measuring cylinder to ensure an accurate reading.

View solution

You may draw on Figure 1.2.

.....

..... [1]

(v) Calculate the density ρ_1 of one coin. Use your values from **1(a)(i)** and **1(a)(iii)** and the equation:

View solution

$$\rho_1 = \frac{m_1}{V_1}.$$

Include the unit.

ρ_1 = ... unit ..... [2]

© Cambridge University Press & Assessment 2026

Method 2

View solution

(b) The student makes a stack of the five coins, as shown in Figure 1.4.

The coins are drawn full size.

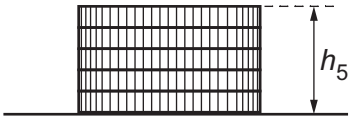

Figure 1.4

The student records the mass m_5 of the five coins.

m_5 = 43.6 g

(i) Measure the height h_5 of the five coins in Figure 1.4.

h_5 = ... cm [1]

(ii) The radius r of each coin is 1.2 cm.

Calculate the volume V_5 of the five coins. Use your value from **1(b)(i)** and the equation:

$$V_5 = \pi \times r^2 \times h_5.$$

View solution

V_5 = ... cm^3 [1]

(iii) Calculate another value ρ_2 for the density of one coin. Use the values from **1(b)** and the equation:

View solution

$$\rho_2 = \frac{m_5}{V_5}.$$

ρ_2 = ... [1]

© Cambridge University Press & Assessment 2026

(c) Two quantities can be considered to be equal within the limits of experimental accuracy if their values are within 10% of each other.

View solution

State whether your values of ρ_1 from method 1 and ρ_2 from method 2 can be considered equal.

Support your statement with a calculation.

calculation

statement .....

[2]

[Total: 11]

© Cambridge University Press & Assessment 2026

BLANK PAGE

© Cambridge University Press & Assessment 2026

2 A student investigates the relationship between the extension e of a spring and the mass m suspended from the spring.

View solution

(a) Figure 2.1 shows the arrangement of the apparatus the student uses.

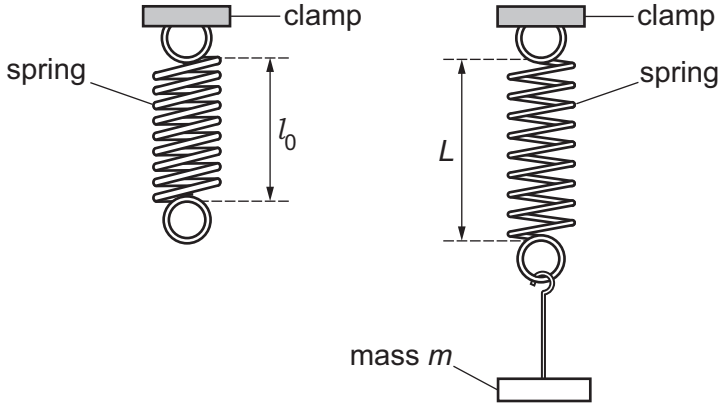

Figure 2.1

The student:

- measures the original length l_0 of the spring
- attaches a mass of m = 10 g to the spring
- measures the new length L of the spring
- calculates the extension e of the spring
- repeats the procedure using masses of m = 20 g, 30 g, 40 g and 50 g.

(i) On Figure 2.1, draw a double-headed arrow (↕) to show the extension of the spring when mass m is suspended from the spring. [1]

(ii) Describe **two** techniques the student uses to measure accurately the length of the spring.

View solution

1 .....

.....

2 .....

.....

[2]

© Cambridge University Press & Assessment 2026

(b) (i) The student's readings are shown in Table 2.1.

View solution

Table 2.1

mass m / g	length L / cm	extension e / cm
0	1.9	0.0
10	2.4	0.5
20	2.8	0.9
30	3.3	1.4
40	3.7	
50	4.2	2.3

Calculate the extension e when a mass of 40 g is suspended from the spring. Use the equation:

$$e = L - l_0.$$

Record your value in Table 2.1. [1]

© Cambridge University Press & Assessment 2026

(ii) Plot a graph of extension e / cm (y-axis) against mass m / g (x-axis).

View solution

Start the axes from the origin (0,0).

Draw a best-fit straight line.

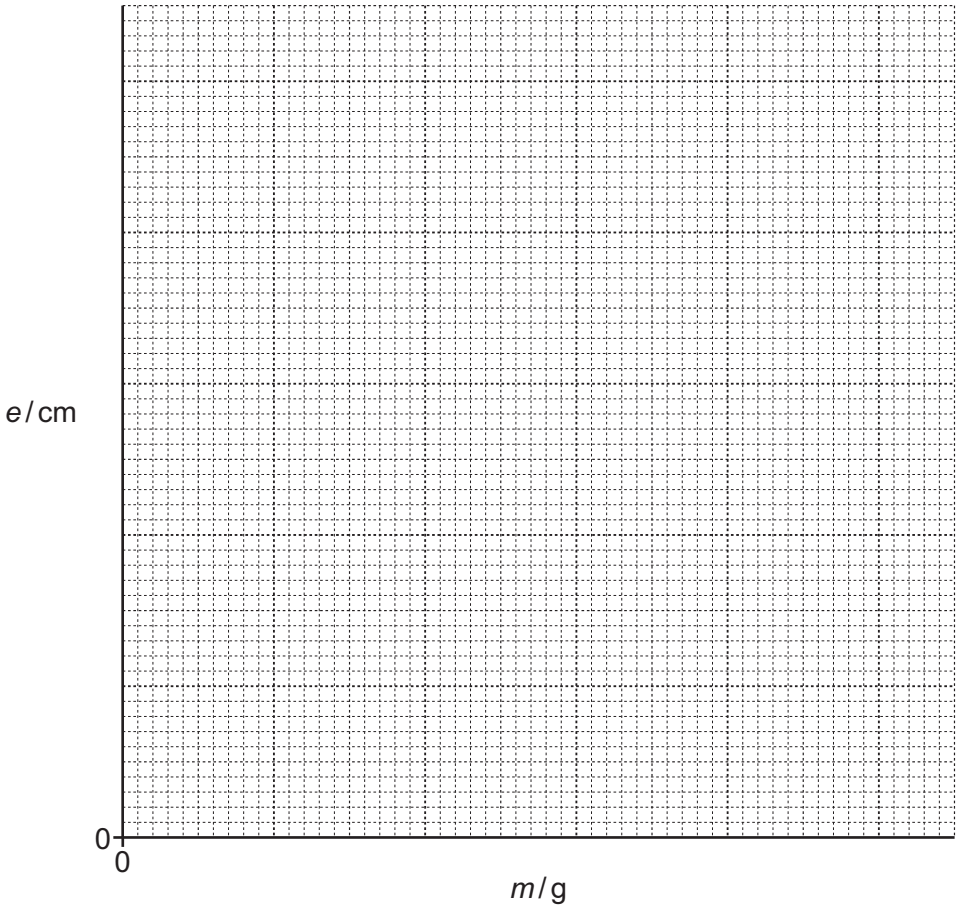

[3]

(iii) Use your graph to determine the length L of the spring when a mass of 12 g is suspended from the spring.

View solution

Show clearly on the graph how you obtained the necessary information.

L = ... cm [3]

(c) Suggest **one** safety precaution the student takes when doing the experiment.

View solution

.....

..... [1]

[Total: 11]

© Cambridge University Press & Assessment 2026

3 A student investigates an electric circuit containing different combinations of resistors.

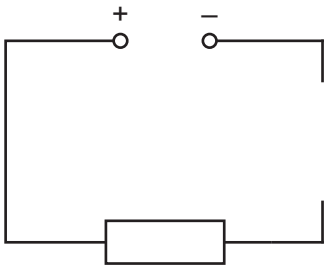

Figure 3.1

View solution

(a) On Figure 3.1, complete the circuit to show:

- a voltmeter connected to measure the potential difference (p.d.) across the resistor
- an ammeter connected to measure the current in the circuit.

[2]

View solution

(b) The student measures the p.d. V across the resistor and the current I in the circuit.

The ammeter reading is shown in Figure 3.2.

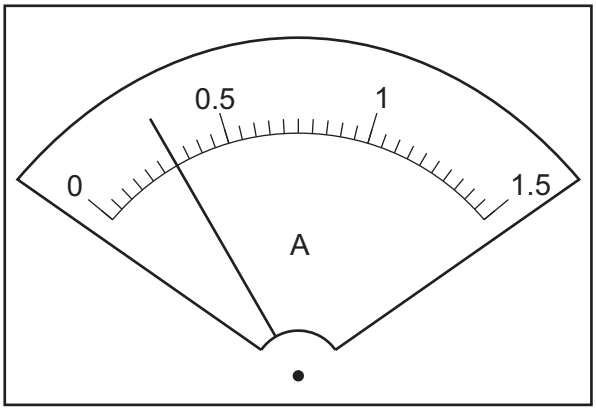

Figure 3.2

Record, in Table 3.1, the value of I shown on the ammeter in Figure 3.2. [1]

© Cambridge University Press & Assessment 2026

Table 3.1

number of resistors	*V*/	*I*/	*R*/
1	0.75		
2	0.75	0.60	1.25
3	0.75	0.85	0.88
4	0.75	1.15	0.65
5	0.75	1.45	0.52

View solution

(c) The student connects resistors, one at a time, in parallel with the resistor in the circuit in Figure 3.1 until there are five resistors in parallel.

The student:

- measures the p.d. *V* across the resistors in parallel
- measures the current *I* in the circuit for each combination of resistors
- calculates the resistance *R* of each combination of resistors.

The student's readings are shown in Table 3.1.

(i) Complete the column headings in Table 3.1. [1]

View solution

(ii) Calculate the value of the resistance *R* when there is **one** resistor in the circuit.

Use the equation:

$$R = \frac{V}{I}.$$

Record your value in Table 3.1. [1]

View solution

(iii) Describe the relationship between the number of resistors in the circuit and the resistance *R* in the circuit.

Justify your answer using values from Table 3.1.

.....

.....

..... [2]

© Cambridge University Press & Assessment 2026

(iv) The resistors heat up during the investigation and this affects the values for the resistance *R*.

View solution

Suggest **two** improvements to reduce this heating effect.

1 .....

.....

2 .....

.....

[2]

View solution

(d) The student takes repeat readings.

Table 3.2 shows the ammeter readings for three resistors in parallel.

Table 3.2

0.85	0.58	0.90	0.80

Identify the anomalous reading. Suggest **one** reason for this anomaly.

anomalous reading = ...

suggestion .....

.....

.....

[2]

[Total: 11]

© Cambridge University Press & Assessment 2026

Turn over

© Cambridge University Press & Assessment 2026

4 A student investigates the rate at which the temperature of water inside a beaker increases when the water is heated.

Plan an experiment to investigate how **one** variable affects the rate at which the temperature of the water increases.

View solution

The apparatus available includes:

- a selection of beakers
- an electrical water heater
- a supply of water.

In your plan:

- state the **one** variable you have chosen to investigate
- name any other apparatus needed
- give a brief description of the method, including what you will measure
- state the key variables to be kept constant
- draw a table, with column headings, to show how to display the readings (you are **not** required to enter any readings in the table)
- explain how to use the readings to reach a conclusion.

© Cambridge University Press & Assessment 2026

.....

.....

.....

.....

.....

.....

.....

.....

.....

.....

.....

.....

.....

.....

.....

.....

.....

..... [7]

© Cambridge University Press & Assessment 2026

BLANK PAGE

Permission to reproduce items where third-party owned material protected by copyright is included has been sought and cleared where possible. Every reasonable effort has been made by the publisher (Cambridge University Press & Assessment) to trace copyright holders, but if any items requiring clearance have unwittingly been included, the publisher will be pleased to make amends at the earliest possible opportunity.

To avoid the issue of disclosure of answer-related information to candidates, all copyright acknowledgements are reproduced online in our Copyright Acknowledgements Booklet. This is produced for each series of examinations and is freely available to download at www.cambridgeinternational.org after the live examination series.

Cambridge International Education is the name of our awarding body and a part of Cambridge University Press & Assessment, which is a department of the University of Cambridge.

© Cambridge University Press & Assessment 2026