Cambridge International Examinations
Cambridge International General Certificate of Secondary Education

PHYSICS **0625/11**

Paper 1 Multiple Choice **October/November 2014**

45 minutes

Additional Materials: Multiple Choice Answer Sheet
Soft clean eraser
Soft pencil (type B or HB recommended)

READ THESE INSTRUCTIONS FIRST

Write in soft pencil.
Do not use staples, paper clips, glue or correction fluid.
Write your name, Centre number and candidate number on the Answer Sheet in the spaces provided unless this has been done for you.
DO **NOT** WRITE IN ANY BARCODES.

There are **forty** questions on this paper. Answer **all** questions. For each question there are four possible answers **A**, **B**, **C** and **D**.
Choose the **one** you consider correct and record your choice in **soft pencil** on the separate Answer Sheet.

Read the instructions on the Answer Sheet very carefully.

Each correct answer will score one mark. A mark will not be deducted for a wrong answer.
Any rough working should be done in this booklet.
Electronic calculators may be used.

The syllabus is approved for use in England, Wales and Northern Ireland as a Cambridge International Level 1/Level 2 Certificate.

This document consists of **17** printed pages and **3** blank pages.

© UCLES 2014

CAMBRIDGE International Examinations

1 Diagram 1 shows a measuring cylinder containing water.

Five identical steel balls are now lowered into the measuring cylinder. Diagram 2 shows the new water level in the cylinder.

View solution

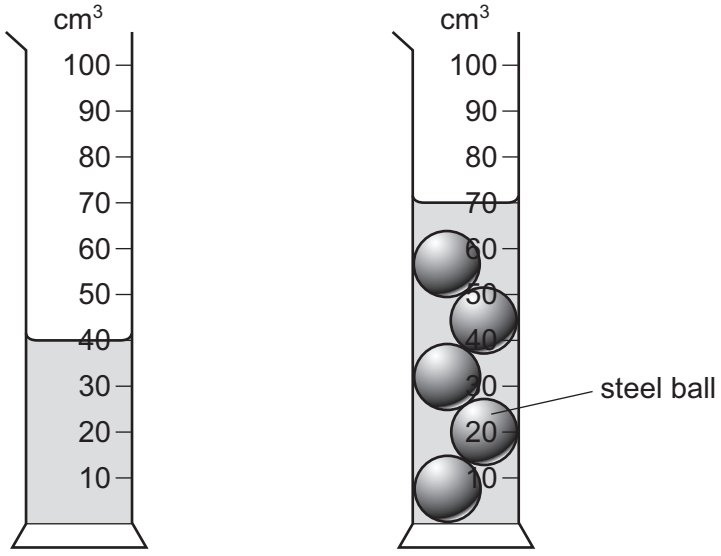

diagram 1 diagram 2

What is the volume of each steel ball?

A 6 cm^3 **B** 14 cm^3 **C** 30 cm^3 **D** 70 cm^3

2 The graph shows how the speed of a car changes with time.

View solution

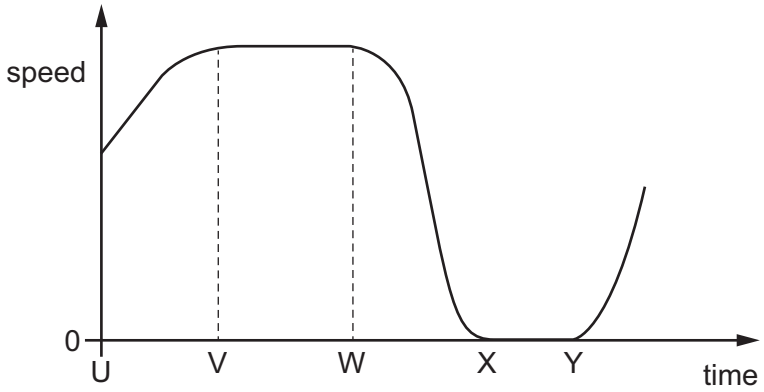

Between which two times is the car stationary?

A U and V **B** V and W **C** W and X **D** X and Y

3 A man stands by a railway track.

View solution

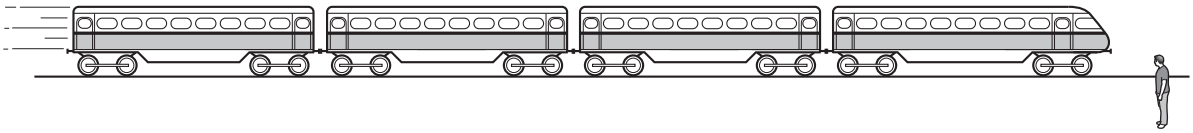

A train travelling at 40 m / s takes 2.0 s to pass the man.

What is the length of the train?

A 20 m **B** 38 m **C** 40 m **D** 80 m

View solution

4 The mass of an astronaut is 70 kg on the Moon.

What is the mass of the astronaut on the Earth?

A 7 kg **B** 70 kg **C** 80 kg **D** 700 kg

5 The weight of an object is found using the balance shown in the diagram. The object is put in the left-hand pan and various weights are put in the right-hand pan.

View solution

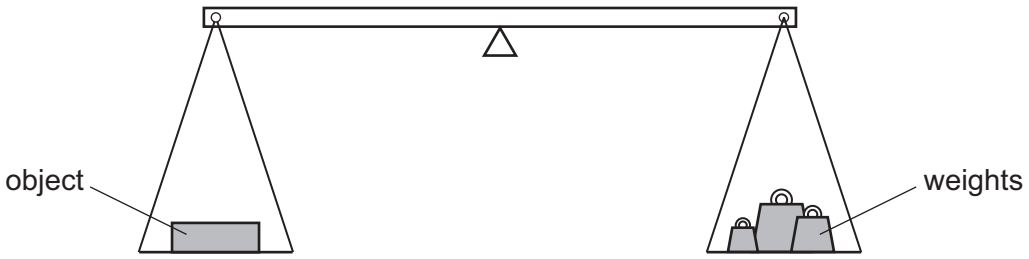

These are the results.

weights in the right-hand pan	effect
0.1 N, 0.1 N, 0.05 N, 0.02 N	balance tips down slightly on the left-hand side
0.2 N, 0.1 N, 0.01 N	balance tips down slightly on the right-hand side

What is the best estimate of the weight of the object?

A 0.27 N **B** 0.29 N **C** 0.31 N **D** 0.58 N

© UCLES 2014

6 The diagram shows the dimensions of a rectangular block of metal of mass m.

View solution

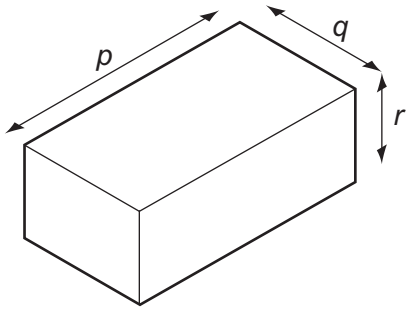

Which expression is used to calculate the density of the metal?

A $m \times p \times q$

B $m \times p \times q \times r$

C $\frac{m}{(p \times q)}$

D $\frac{m}{(p \times q \times r)}$

7 In which situation is **no** resultant force needed?

View solution

A a car changing direction at a steady speed

B a car moving in a straight line at a steady speed

C a car slowing down

D a car speeding up

8 Which properties of a body can be changed by applying a force to the body?

View solution

A mass, motion and shape

B mass and motion, but not shape

C mass and shape, but not motion

D motion and shape, but not mass

© UCLES 2014

9 The list contains three energy resources P, Q and R.

View solution

P geothermal energy from hot rocks

Q nuclear fission in reactors

R sunlight on solar panels

Which of these resources are renewable?

A P and Q only

B P and R only

C Q and R only

D P, Q and R

10 The diagram shows three different containers J, K and L. Each container contains water of the same depth.

View solution

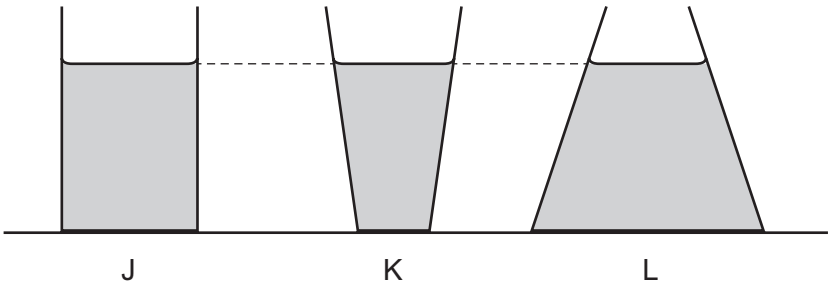

Which statement about the pressure of the water on the base of each container is correct?

A The water pressure is greatest in container J.

B The water pressure is greatest in container K.

C The water pressure is greatest in container L.

D The water pressure is the same for all three containers.

11 Which movement will require the greatest amount of work to be done?

View solution

A a force of 10 N moving an object a distance of 3.0 m

B a force of 10 N moving an object a distance of 5.0 m

C a force of 15 N moving an object a distance of 3.0 m

D a force of 15 N moving an object a distance of 5.0 m

© UCLES 2014

12 A water manometer is connected to a gas supply.

View solution

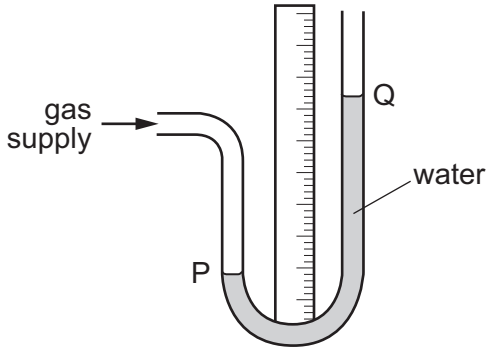

There is a gas leak and the pressure of the gas supply falls.

What happens to the water level at P and what happens to the water level at Q?

	water level at P	water level at Q
A	falls	falls
B	falls	rises
C	rises	falls
D	rises	rises

13 The diagram shows a beaker of water. Four molecules are labelled. The relative amount of energy of each molecule is shown.

View solution

Which molecule is most likely to escape from the liquid?

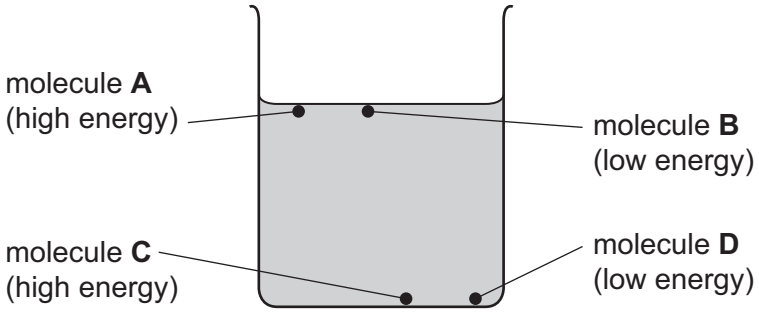

© UCLES 2014

14 Some gas is trapped in a container of fixed volume.

The temperature of the gas increases.

Which graph shows how the pressure of the gas changes with temperature?

A

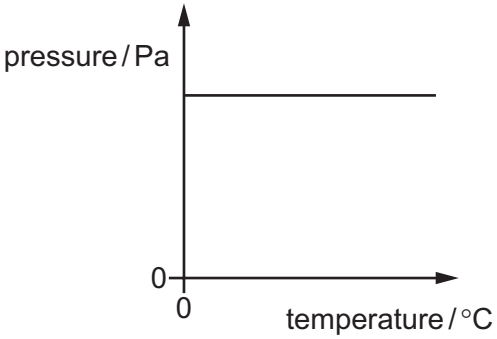

B

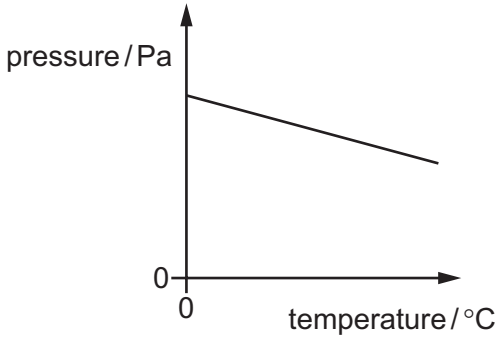

C

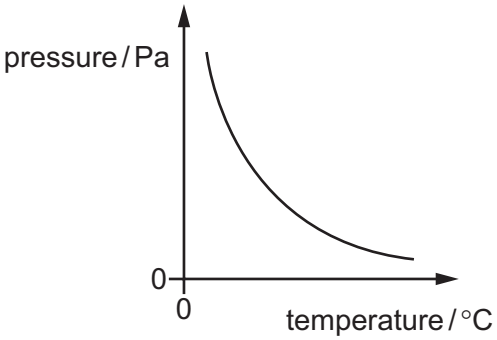

D

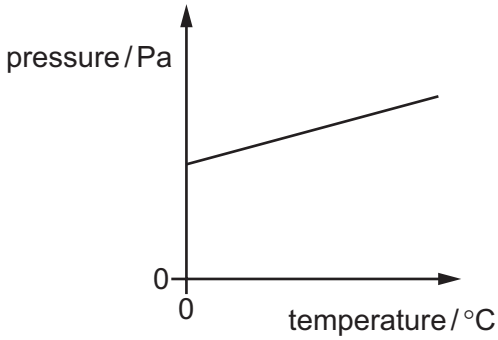

15 Which points are the fixed points of the liquid-in-glass thermometer shown?

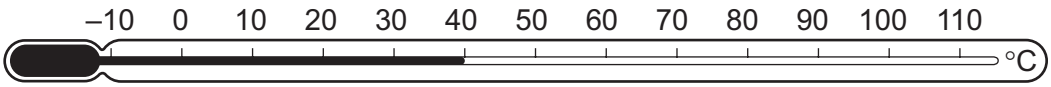

A the beginning and end points of the column of liquid

B the beginning and end points of the thermometer scale

C the points marked 0 °C and 100 °C

D the top and bottom points of the thermometer bulb

© UCLES 2014

16 Equal masses of two different liquids are put into identical beakers.

View solution

Liquid 1 is heated for 100 s and liquid 2 is heated for 200 s by heaters of the same power.

The temperature of both liquids increases by the same amount.

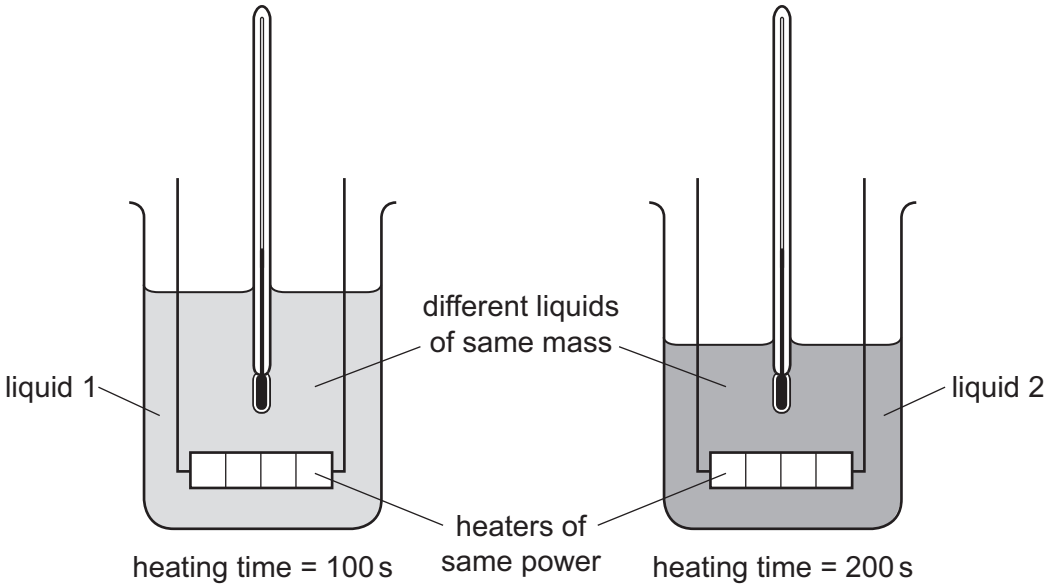

Which statement is correct?

A Both liquids receive the same amount of energy.

B Liquid 1 receives more energy than liquid 2.

C Both liquids have equal thermal capacity.

D The thermal capacity of liquid 1 is less than the thermal capacity of liquid 2.

17 The metal surface of a kettle is hot.

View solution

What happens to the cool air outside the kettle when it comes into contact with the hot kettle?

A The density of the air decreases and the air falls.

B The density of the air decreases and the air rises.

C The density of the air increases and the air falls.

D The density of the air increases and the air rises.

© UCLES 2014

18 One type of double glazing consists of two panes of glass separated by a vacuum.

View solution

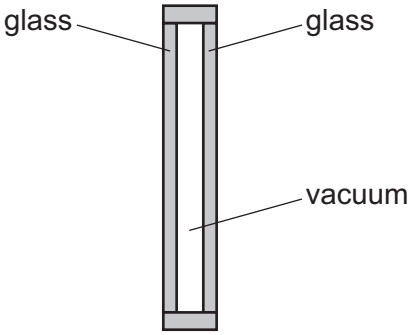

Which method or methods of energy transfer are prevented by the vacuum?

A conduction and convection

B conduction and radiation

C convection and radiation

D radiation only

19 The diagram shows four waves drawn to the same scale.

View solution

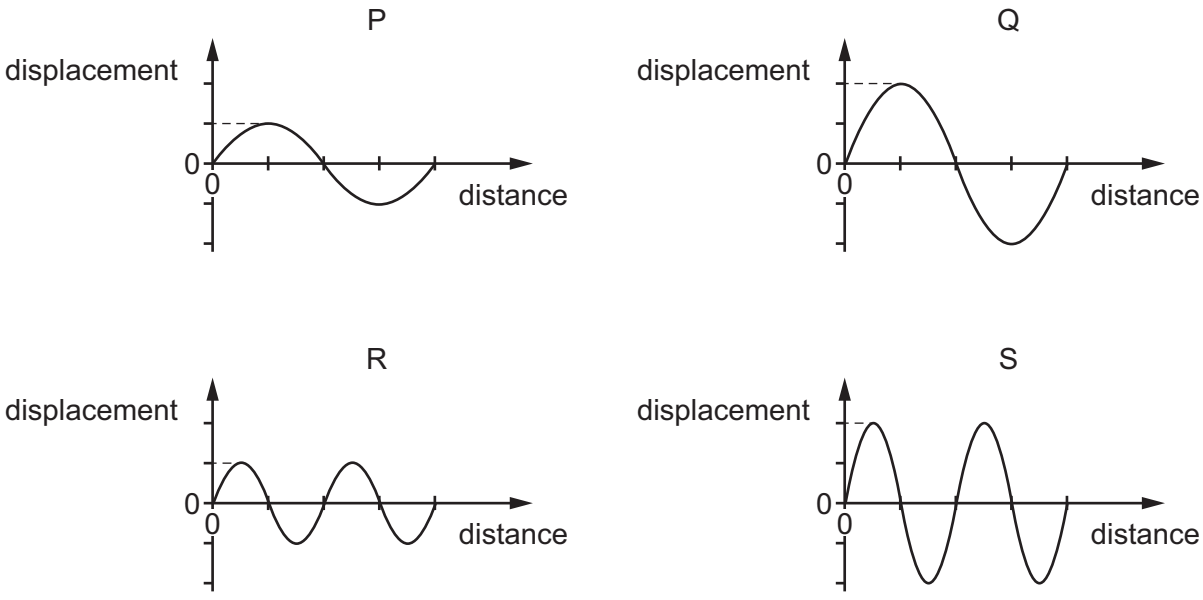

Which statement is correct?

A The amplitude of wave P is the same as the amplitude of wave R.

B The amplitude of wave S is double the amplitude of wave Q.

C The wavelength of wave Q is double the wavelength of wave P.

D The wavelength of wave S is the same as the wavelength of wave Q.

© UCLES 2014

20 Light waves pass from air into glass and are refracted.

What always remains constant when this happens?

A direction

B frequency

C speed

D wavelength

View solution

21 Which type of electromagnetic wave is used in airport security scanners?

A infra-red

B microwaves

C radio waves

D X-rays

View solution

22 Which waves are longitudinal?

View solution

A



light waves
from a lamp

B

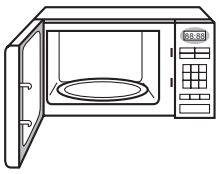

microwaves
in an oven

C

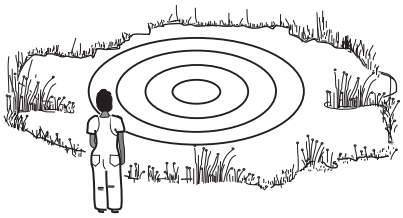

water waves
on a pond

D



sound waves
from a trumpet

23 An object is placed in front of a converging lens. The lens has a focal length *f*.

The lens produces a real, enlarged image of the object.

In which labelled position is the object placed?

View solution

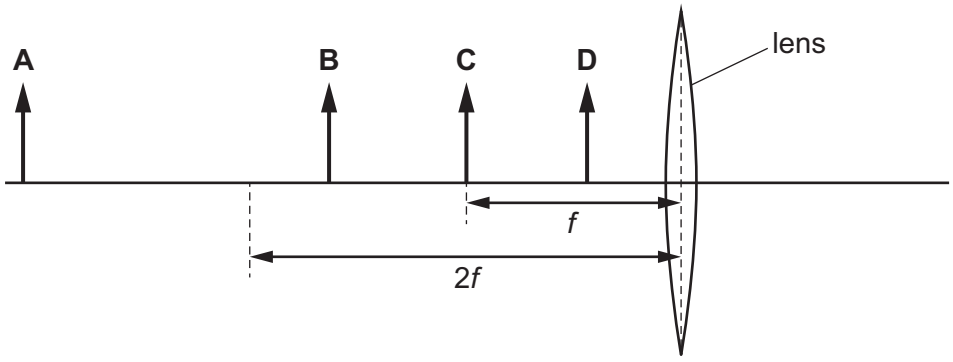

24 A fire alarm is not loud enough and the pitch is too low. An engineer adjusts the alarm so that it produces a louder note of a higher pitch.

What effect does this have on the amplitude and on the frequency of the sound waves that the alarm produces?

View solution

	amplitude	frequency
A	larger	larger
B	larger	smaller
C	smaller	larger
D	smaller	smaller

25 In an experiment to measure the speed of sound, a student uses a stopwatch to find the time taken for a sound wave to travel from X to Y. She does this six times.

View solution

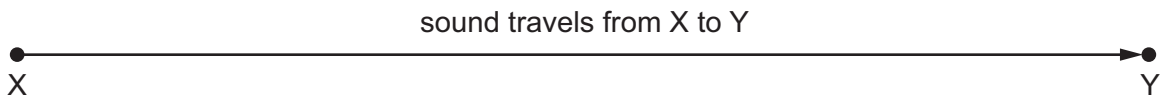

The table shows her results.

measurement	time / s
first	0.5
second	0.7
third	0.6
fourth	0.4
fifth	0.9
sixth	0.5

Which value for the time should be used to calculate the speed of sound?

A 0.4 s **B** 0.5 s **C** 0.6 s **D** 0.9 s

© UCLES 2014

26 The ends of three metal rods are tested by holding end Q of rod 1 close to the others in turn.

View solution

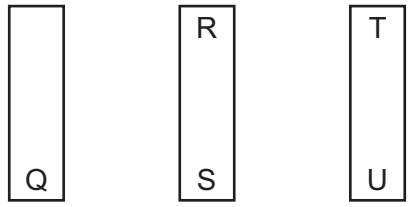

The results are as follows.

End Q: attracts end R,
attracts end S,
attracts end T,
repels end U.

Which of the metal rods is a magnet?

A rod 1 only

B rod 1 and rod 2

C rod 1 and rod 3

D rod 3 only

27 A permanent magnet is made from metal and an electromagnet uses a metal core.

View solution

Which metal is suitable for each of these purposes?

	permanent magnet	core of electromagnet
A	iron	iron
B	iron	steel
C	steel	iron
D	steel	steel

28 Which row gives the unit for energy and the unit for electromotive force (e.m.f.)?

View solution

	energy	e.m.f.
A	J	N
B	J	V
C	W	N
D	W	V

© UCLES 2014

29 A student carries out an experiment to investigate the resistance of a resistor R. She takes a series of readings of potential difference (p.d.) and current, and plots a graph of her results.

View solution

Which circuit should she use?

A

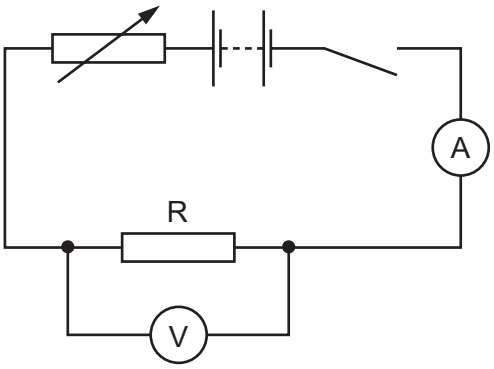

B

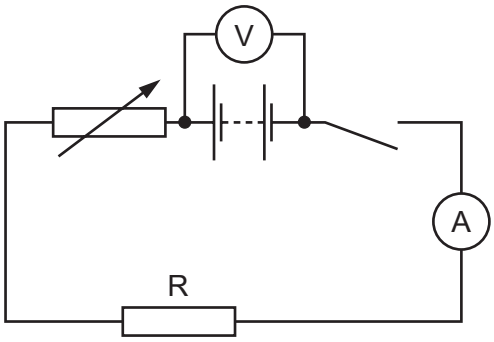

C

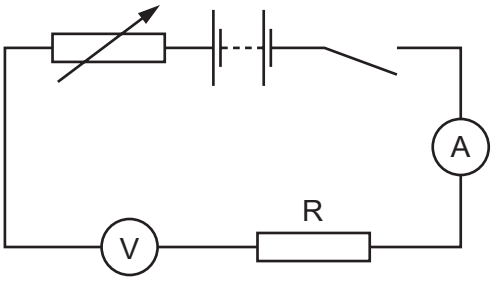

D

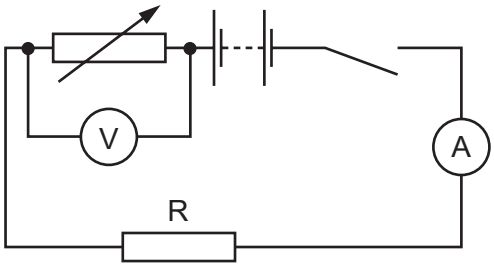

30 The diagram shows a circuit with a 3.0 Ω resistor and a 2.0 Ω resistor connected in parallel.

View solution

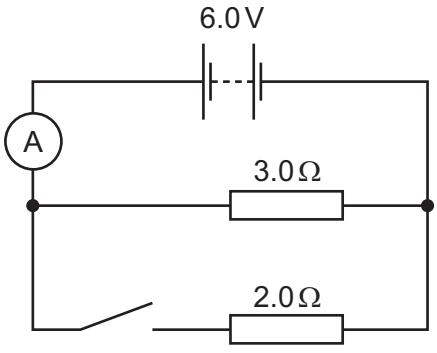

The switch is open, and the ammeter reads 2.0 A.

The switch is now closed and the ammeter reads the total current in both resistors.

What is the ammeter reading with the switch closed?

A 1.2 A **B** 3.0 A **C** 4.0 A **D** 5.0 A

© UCLES 2014

31 The diagram shows a torch containing two cells, a switch and a lamp.

View solution

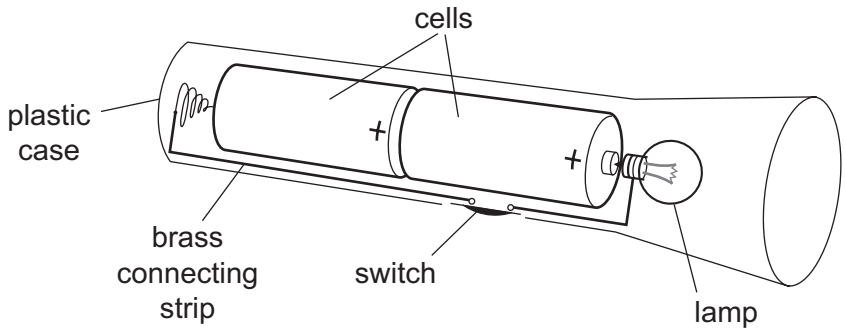

Which is the circuit diagram for the torch?

A

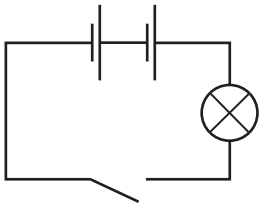

B

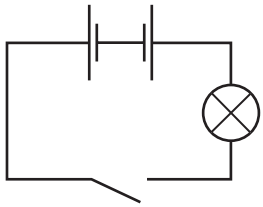

C

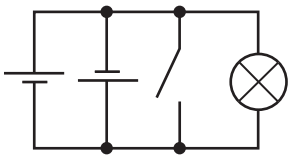

D

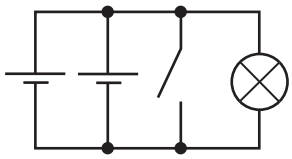

32 An engineer uses the potential divider shown in the diagram. He needs the output voltage to be one tenth ($\frac{1}{10}$) of the input voltage.

View solution

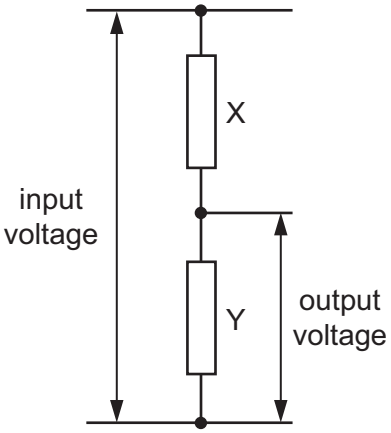

Which pair of values could he use for the two resistors X and Y?

	X / kΩ	Y / kΩ
A	1.0	9.0
B	1.0	10.0
C	9.0	1.0
D	10.0	1.0

© UCLES 2014

33 The current in a kettle is 10 A and it is protected by a 13 A fuse.

View solution

The owner of the kettle replaces the 13 A fuse with a 3 A fuse.

What happens when the kettle is switched on?

A The fuse blows and the kettle is damaged.

B The fuse blows and the kettle is undamaged.

C The fuse does not blow and the kettle works correctly.

D The fuse does not blow but the kettle fails to work.

34 The diagram shows cables used in the transmission of electrical energy. High voltages are used for the transmission.

View solution

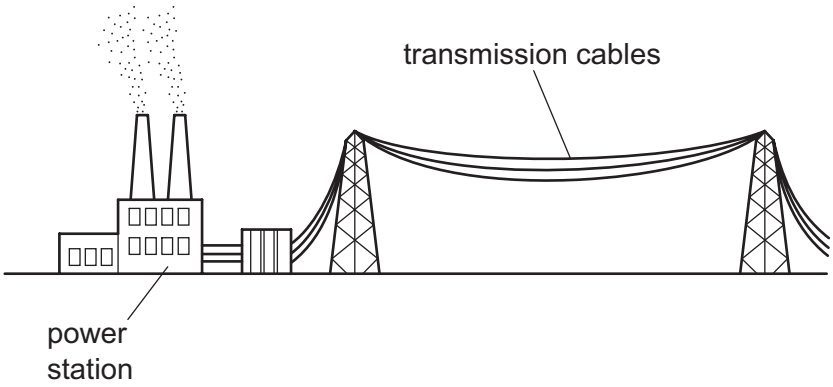

Why are high voltages used for the transmission of electrical energy?

A Fear of high voltages stops people from interfering with the cables.

B Heat loss in the cables is smaller than if low voltages are used.

C High voltages increase the current in the cables.

D High voltages produce large magnetic fields, so less insulation is needed.

35 Which diagram shows the magnetic field pattern around a wire that is carrying a current perpendicular to the page?

View solution

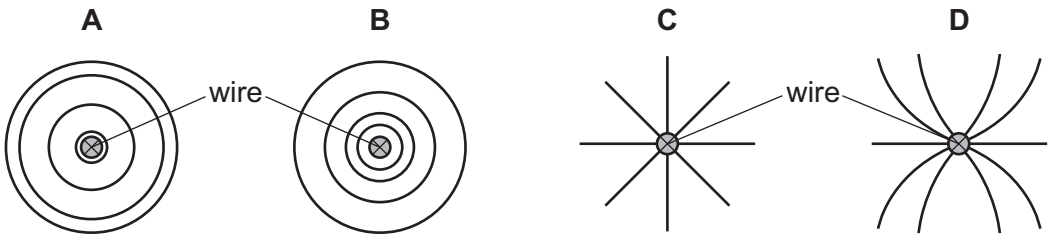

36 The diagram shows a simple transformer with an input of 240 V and an output of 40 V.

There are 600 turns on the primary coil.

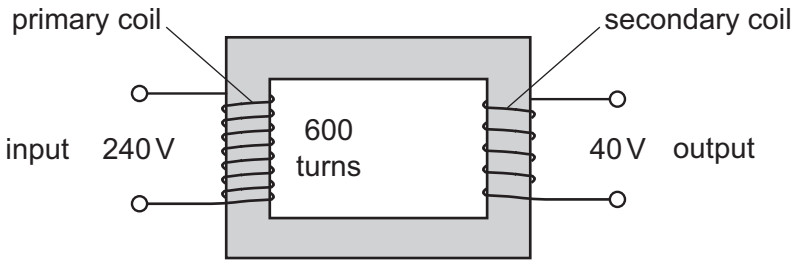

How many turns are there on the secondary coil?

A 100 **B** 320 **C** 400 **D** 3600

37 In a cathode-ray tube, a hot tungsten cathode releases particles by thermionic emission.

What are these particles?

A α-particles

B electrons

C protons

D tungsten atoms

38 The diagram shows a radioactive source, a thick aluminium sheet and a radiation detector.

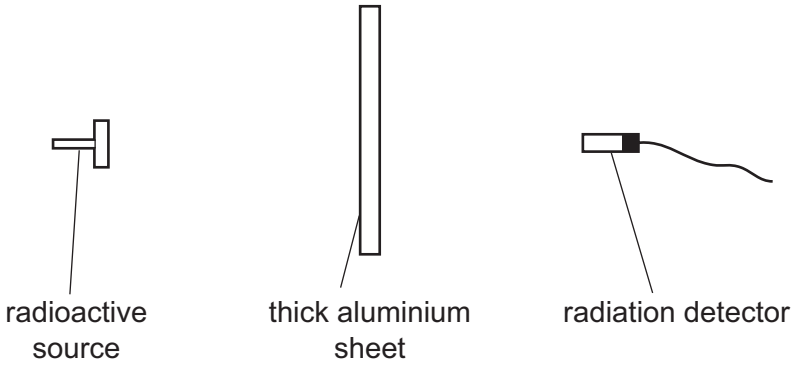

The radiation detector shows a reading greater than the background reading.

Which type of radiation is being emitted by the source and detected by the detector?

A α-radiation

B β-radiation

C γ-radiation

D infra-red radiation

© UCLES 2014

39 The count rate from a radioactive isotope is recorded every hour. The count rate is corrected for background radiation.

View solution

The table shows the readings.

time / hours	0	1	2	3	4	5
corrected count rate / counts / s	800	620	480	370	290	220

What estimate of the half-life of the isotope can be obtained from the readings in the table?

A between 1 and 2 hours

B between 2 and 3 hours

C between 3 and 4 hours

D between 4 and 5 hours

40 A nuclide is represented by the symbol ${}^{P}_{Q}X$.

View solution

How many neutrons are in one nucleus of the nuclide?

A P **B** Q **C** P + Q **D** P – Q

© UCLES 2014

BLANK PAGE

BLANK PAGE

BLANK PAGE

Permission to reproduce items where third-party owned material protected by copyright is included has been sought and cleared where possible. Every reasonable effort has been made by the publisher (UCLES) to trace copyright holders, but if any items requiring clearance have unwittingly been included, the publisher will be pleased to make amends at the earliest possible opportunity.

Cambridge International Examinations is part of the Cambridge Assessment Group. Cambridge Assessment is the brand name of University of Cambridge Local Examinations Syndicate (UCLES), which is itself a department of the University of Cambridge.