Cambridge IGCSE

Cambridge International Examinations
Cambridge International General Certificate of Secondary Education

CANDIDATE NAME									
CENTRE NUMBER						CANDIDATE NUMBER				

PHYSICS **0625/22**

Paper 2 Core **October/November 2014**

1 hour 15 minutes

Candidates answer on the Question Paper.

No Additional Materials are required.

READ THESE INSTRUCTIONS FIRST

Write your Centre number, candidate number and name on all the work you hand in.
Write in dark blue or black pen.
You may use an HB pencil for any diagrams or graphs.
Do not use staples, paper clips, glue or correction fluid.
DO **NOT** WRITE IN ANY BARCODES.

Answer **all** questions.
Electronic calculators may be used.
You may lose marks if you do not show your working or if you do not use appropriate units.
Take the weight of 1 kg to be 10 N (i.e. acceleration of free fall = 10 m/s^2).

At the end of the examination, fasten all your work securely together.
The number of marks is given in brackets [ ] at the end of each question or part question.

The syllabus is approved for use in England, Wales and Northern Ireland as a Cambridge International Level 1/Level 2 Certificate.

This document consists of **15** printed pages and **1** blank page.

© UCLES 2014

CAMBRIDGE International Examinations

1 **(a)** Which two conditions apply for an object on Earth to be in equilibrium? Tick **two** boxes.

View solution

there are no forces acting on the object ☐

the object has no mass ☐

there is no resultant force on the object ☐

there is no resultant moment ☐

[2]

(b) Fig. 1.1 is a simplified diagram of a balance with equal arms.

View solution

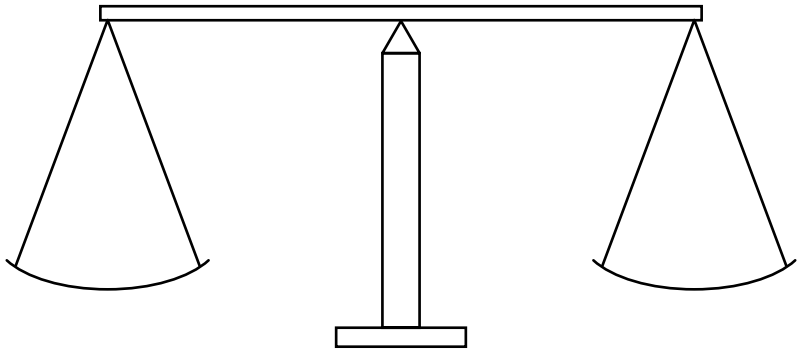

Fig. 1.1

A copper block of unknown mass is placed on the left-hand pan. Six standard masses, placed on the right-hand pan, cause the balance to be in equilibrium, with the beam horizontal.

The six standard masses on the right-hand pan are:

100 g, 100 g, 50 g, 10 g, 5 g, 2 g

(i) What is the mass of the copper block?

mass = ... g [1]

(ii) What will be seen to happen if the 2 g mass is removed from the right-hand pan?

.....

.....[1]

(iii) The volume of the copper block is 30 cm^3.

Calculate the density of copper. State the unit in your answer.

density = ... [4]

[Total: 8]

© UCLES 2014

2 A car travels along a straight, horizontal road at a steady speed of 36 m/s. The total resistive force on the car is 2800 N, as represented on Fig. 2.1.

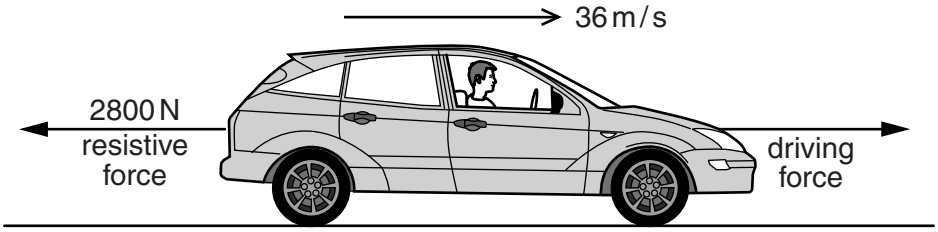

Fig. 2.1

(a) The speed of the car is constant at 36 m/s.

What is the value of the driving force?

driving force = ... N [1]

(b) Later in the journey, the car's speed decreases uniformly from 36 m/s to zero in 18 s.

(i) On the axes in Fig. 2.2, sketch the speed-time graph for the motion of the car during these 18 s. Mark 36 m/s and 18 s clearly on your graph.



[3]

Fig. 2.2

(ii) Determine the distance travelled by the car in these 18 s.

distance = ... m [3]

[Total: 7]

3 **(a)** State two sources of energy that are renewable.

View solution

1. .....

2. .....

[2]

(b) State two sources of energy that will eventually run out or become uneconomic to extract.

View solution

1. .....

2. .....

[2]

(c) In a hydroelectric power station, water is stored high up behind a dam.

View solution

(i) State the type of energy stored by the water.

.....[1]

(ii) Explain what happens to the water in order to generate electricity.

View solution

.....

.....

..... [2]

[Total: 7]

© UCLES 2014

4 Some water forms a shallow puddle on a metal surface in a laboratory, as shown in Fig. 4.1.

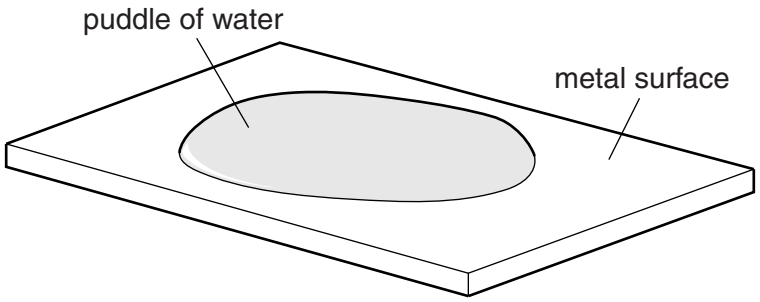

Fig. 4.1

Later in the day, it is noticed that the puddle has disappeared and the metal surface is dry.

(a) Which process has caused the disappearance of the puddle? Tick one box.

View solution

boiling ☐

condensation ☐

evaporation ☐

freezing ☐

[1]

(b) In terms of molecules, describe how this process occurs.

View solution

.....

.....

.....[2]

(c) When this process occurs, it causes cooling.

View solution

In terms of molecules, explain why this cooling occurs.

.....

.....

.....[2]

[Total: 5]

© UCLES 2014

5 Here are some statements about forces.

View solution

Some statements are correct. Put a tick (✓) in the box alongside each of these.

Other statements are false. Put a cross (✗) in the box alongside each of these.

☐	On Earth, an object has weight due to a force acting towards the Earth.
☐	Work is done when an object moves in the direction of the force acting on it.
☐	When a single force acts on an object, it moves at constant speed.
☐	If the only forces acting on an object are two equal and opposite forces in the same straight line, then the object is in equilibrium.
☐	An object at rest always has no forces acting on it.

[5]

[Total: 5]

© UCLES 2014

6 **(a)** A laboratory liquid-in-glass thermometer has a range from –10 °C to 110 °C.

View solution

Describe what you would do to check the accuracy of

(i) the 0 °C mark on the thermometer,

.....

.....

.....[2]

(ii) the 100 °C mark on the thermometer.

View solution

.....

.....

.....[1]

(b) The temperature of some water is reduced to –10 °C.

View solution

In which state is the water at this temperature? .....[1]

(c) The measurement of temperature can be carried out using any physical property that changes with temperature. Two examples are given below.

View solution

the volume of a liquid

the resistance of a wire

Add two more examples. You may re-use words from the examples if you wish, but you do not have to do so.

1. the ..... of .....
2. the ..... of .....

[2]

[Total: 6]

7 Four school athletes are about to run a 100 m race, as shown in Fig. 7.1.

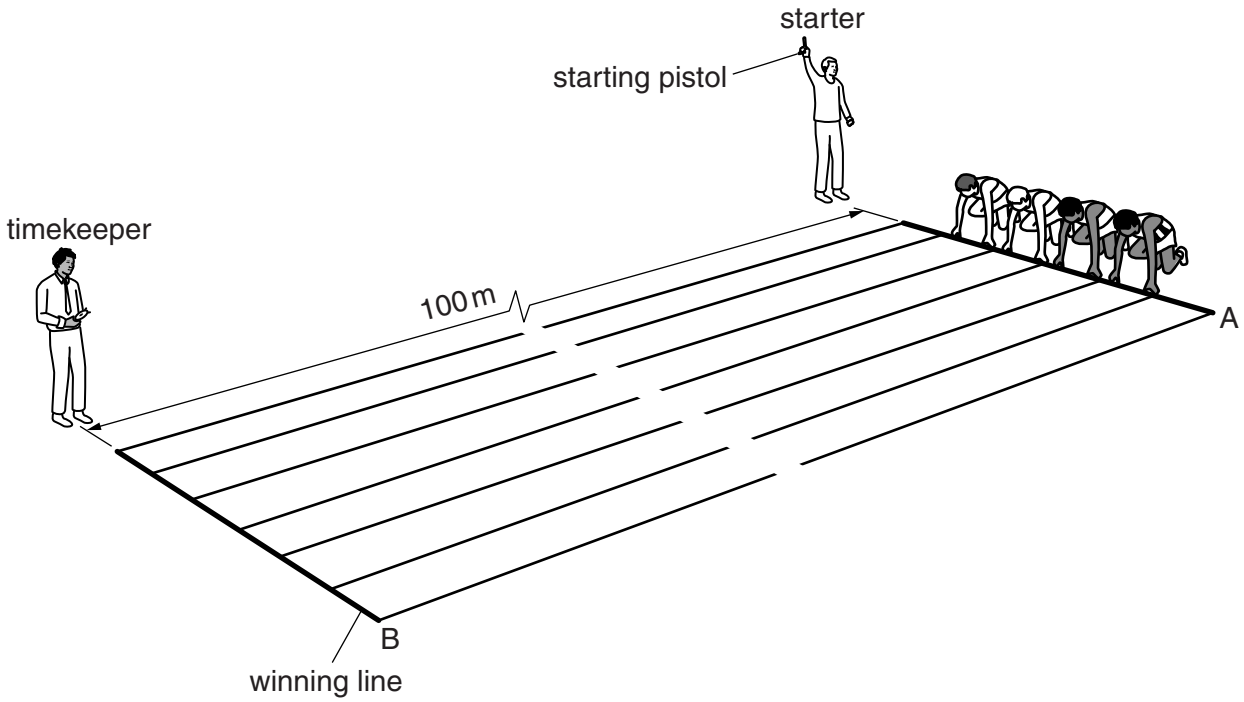

Fig. 7.1 (not to scale)

The runners start at A, when the starter fires the starting pistol, and they finish at B.

(a) Suggest what equipment

(i) the groundsman used when he measured out the 100 m before marking the track,

.....

(ii) the timekeeper uses to time how long the runners take to run the 100 m.

.....

[2]

(b) The timing instrument is known to work correctly.

What might cause the timekeeper to introduce an inaccuracy into the timing of the race?

.....[1]

(c) The winner takes 12.5 s to run the race.

View solution

(i) Calculate the average speed of the winner.

average speed = ... m/s [3]

(ii) Suggest one reason why the average speed of the winner is less than his top speed.

.....[1]

(d) On another occasion, the starter and timekeeper decide to measure the speed of the sound from the gun. They use the same equipment they used to time the race.

(i) Suggest how far apart they should be. .....

(ii) Suggest how the timekeeper would know when to start timing.

View solution

.....

.....

[2]

[Total: 9]

© UCLES 2014

8 Fig. 8.1 shows a section through the swimming pool in a hotel.

To make the pool more attractive at night, there are submerged lamps in the pool. Fig. 8.1 shows three rays coming from one of these lamps.

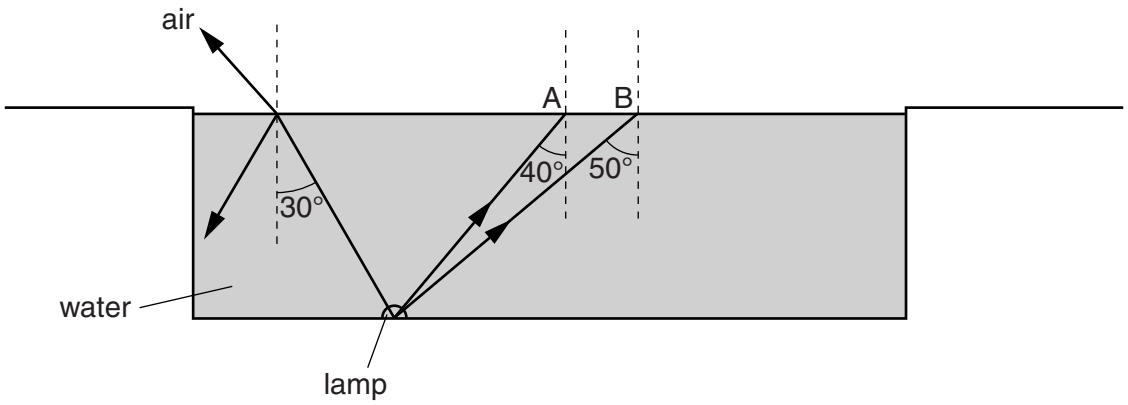

Fig. 8.1

The critical angle for the water/air boundary is 48°.

(a) State what is meant by the *critical angle* for a ray of light.

View solution

.....

.....

.....[3]

(b) On Fig. 8.1, use your ruler to draw approximate paths for the rays after they reach the surface at A and B. [4]

[Total: 7]

View solution

9 **(a)** Which electrical quantity does a voltmeter measure? Tick one box.

View solution

current ☐

potential difference ☐

power ☐

resistance ☐

[1]

(b) The transformer in Fig. 9.1 has 600 turns on its primary coil AB, and 400 turns on its secondary coil CD.

View solution

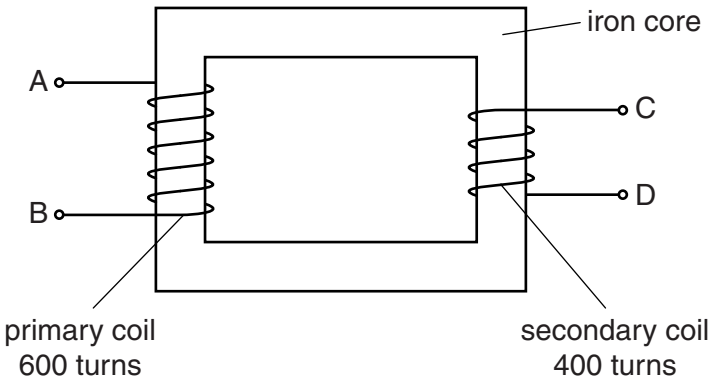

Fig. 9.1

(i) AB is connected to a 120V alternating mains supply. An a.c. voltmeter is connected across CD.

Calculate the reading on the voltmeter.

voltmeter reading = ... V [3]

(ii) A large number of cells are connected in series, to make a 120V battery.

The mains supply is disconnected from AB, and the 120V battery is connected in its place.

View solution

1. State the voltage across CD. .....

2. Explain your answer.

.....

.....

[2]

[Total: 6]

© UCLES 2014

10 A student is attempting to measure the resistance of a resistor R. To do this, she connects the circuit of Fig. 10.1.

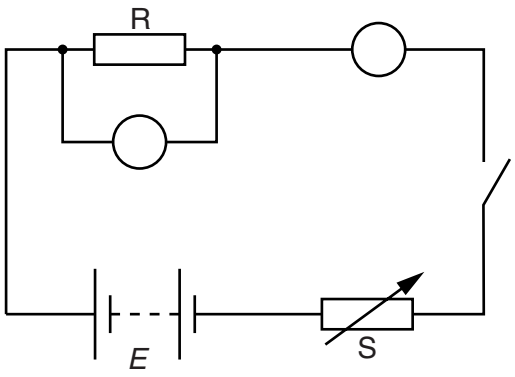

Fig. 10.1

(a) The letter *E* on Fig. 10.1 represents the electromotive force (e.m.f.) of the battery.

View solution

In which unit is *E* measured? ..... [1]

(b) The circles on Fig. 10.1 represent a voltmeter and an ammeter.

View solution

Write V and A in the appropriate circles, to show which meter is which. [1]

(c) The battery cannot be changed.

View solution

(i) Write down the label of the component that is used to vary the current in the circuit.

.....

(ii) What is this component called?

View solution

.....

[2]

(d) The table below gives the readings obtained by the student for different currents.

ammeter reading/A	0	0.20	0.30	0.50	0.75	1.00
voltmeter reading/V	0	1.15	1.65	2.65	4.10	5.55

© UCLES 2014

(i) On Fig. 10.2, draw a graph of these values. The first two points have been plotted for you.

[2]

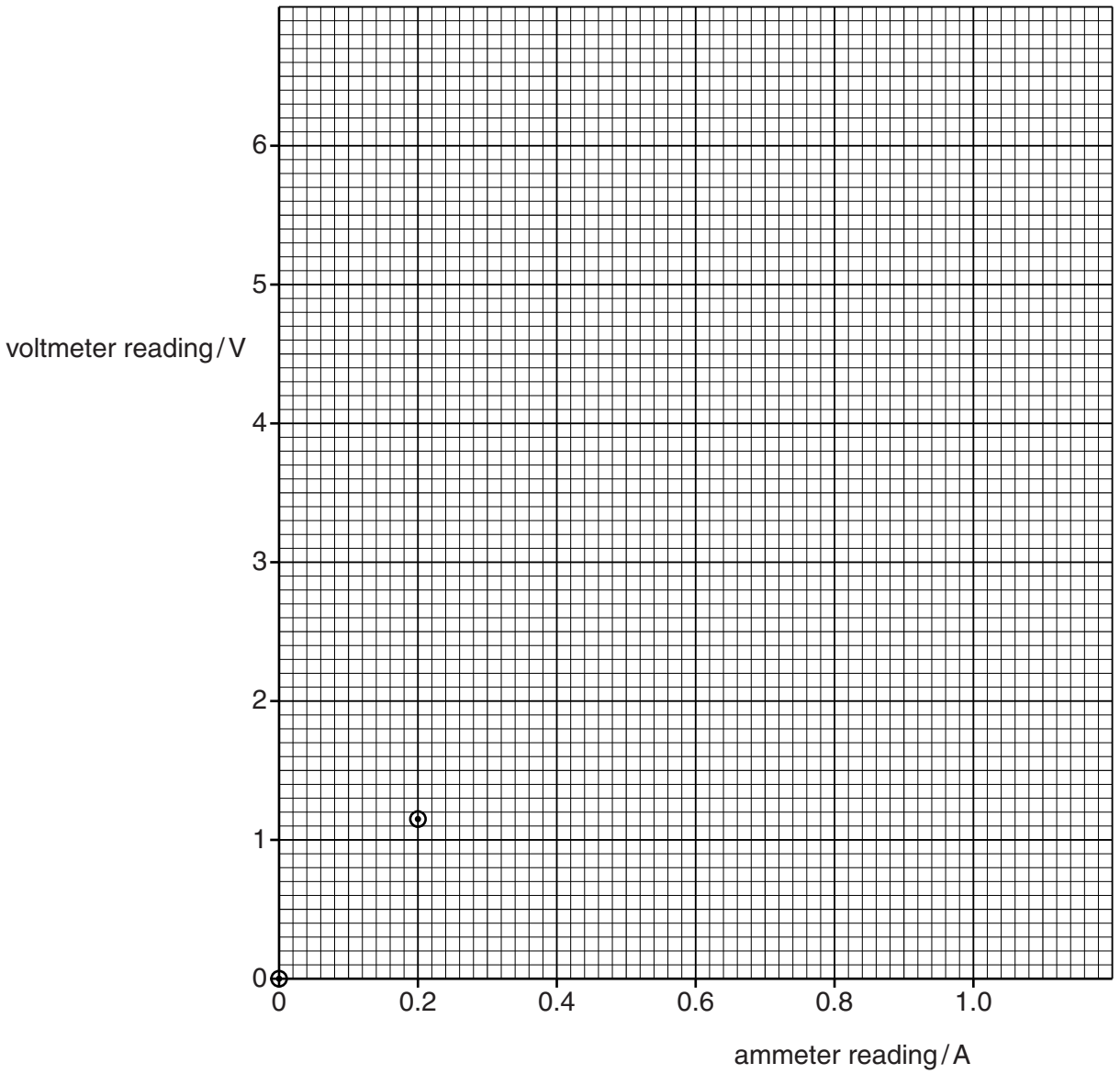

Fig. 10.2

(ii) Use your graph to find a value for the resistance of R.

resistance = ... Ω [3]

[Total: 9]

11 The radiation detector and counter in Fig. 11.1 are being used to count particles from a radioactive source.

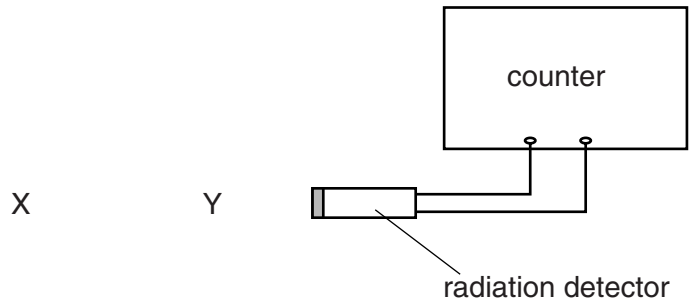

Fig. 11.1

Each time the counter is used to make a measurement, it is first reset to zero and then left switched on for 3 minutes.

(a) With no radioactive source anywhere near the radiation detector, after being switched on for 3 minutes the reading on the counter is 85 counts.

Suggest what radiation caused this reading.

View solution

.....[1]

(b) A radioactive source emitting β-particles is placed at X. After 3 minutes, the counter reads 592 counts.

Calculate the average count rate, in counts/min, from the radioactive source.

View solution

count rate = ... counts/min [3]

(c) The β-particle source is left at X and a block of aluminium 4 cm thick is placed at Y.

View solution

(i) Suggest what the counter would read on this occasion, after 3 minutes.

.....

(ii) Explain your answer to **(c)(i)**.

View solution

.....

.....

[3]

[Total: 7]

© UCLES 2014

12 Fig. 12.1 is a very simple representation of the structure of an atom.

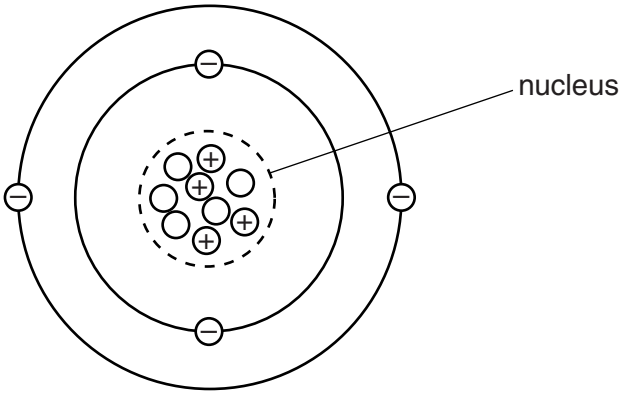

Fig. 12.1

The broken circle indicates the nucleus, and the particles inside this broken circle are the particles in the nucleus.

Charged particles are marked + or –. Uncharged particles are shown as empty circles.

View solution

(a) State the number of neutrons in this atom. ..... [1]

(b) State

View solution

(i) the nucleon number of the atom, ...

(ii) the proton number of the atom. .....

[2]

(c) What name is given to the negatively-charged particles? ..... [1]

[Total: 4]

View solution

© UCLES 2014

BLANK PAGE

Permission to reproduce items where third-party owned material protected by copyright is included has been sought and cleared where possible. Every reasonable effort has been made by the publisher (UCLES) to trace copyright holders, but if any items requiring clearance have unwittingly been included, the publisher will be pleased to make amends at the earliest possible opportunity.

Cambridge International Examinations is part of the Cambridge Assessment Group. Cambridge Assessment is the brand name of University of Cambridge Local Examinations Syndicate (UCLES), which is itself a department of the University of Cambridge.