Cambridge IGCSE

**Cambridge International Examinations**
Cambridge International General Certificate of Secondary Education

| | | | | | | | | | |
|---|---|---|---|---|---|---|---|---|---|
| CANDIDATE NAME | | | | | | | | | |
| CENTRE NUMBER | | | | | | CANDIDATE NUMBER | | | | |

**PHYSICS** **0625/23**

Paper 2 Core **October/November 2014**

**1 hour 15 minutes**

Candidates answer on the Question Paper.

No Additional Materials are required.

**READ THESE INSTRUCTIONS FIRST**

Write your Centre number, candidate number and name on all the work you hand in.
Write in dark blue or black pen.
You may use an HB pencil for any diagrams or graphs.
Do not use staples, paper clips, glue or correction fluid.
DO **NOT** WRITE IN ANY BARCODES.

Answer **all** questions.
Electronic calculators may be used.
You may lose marks if you do not show your working or if you do not use appropriate units.
Take the weight of 1 kg to be 10 N (i.e. acceleration of free fall = 10 m/s$^2$).

At the end of the examination, fasten all your work securely together.
The number of marks is given in brackets [ ] at the end of each question or part question.

The syllabus is approved for use in England, Wales and Northern Ireland as a Cambridge International Level 1/Level 2 Certificate.



© UCLES 2014

CAMBRIDGE International Examinations

**1** A student hangs a spring vertically from a hook, as shown in Fig. 1.1.

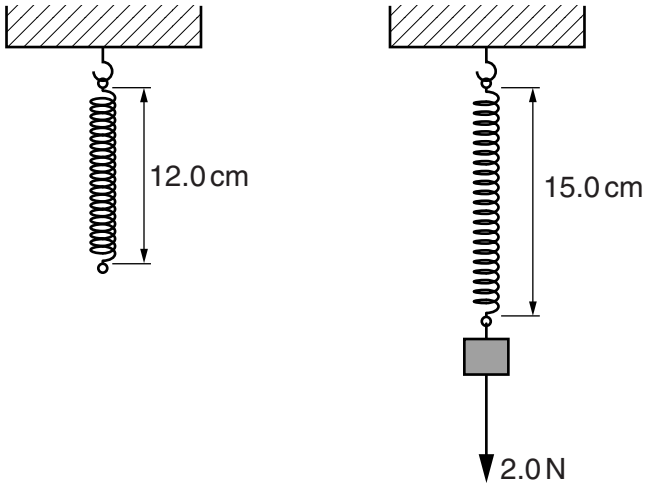


**Fig. 1.1**

View solution

**(a)** Describe how the length of the spring can be measured accurately, after it has been hung from the hook.

.....

.....

.....

.....

.....

.....[3]

View solution

**(b)** With no load, the spring is 12.0 cm long.

With a load of 2.0 N on the end of the spring, its length is 15.0 cm.

Calculate the extension of the spring.

extension = ..... cm [1]

© UCLES 2014

**(c)** The load is attached to the spring and then released.

View solution

Fig. 1.2 represents the forces acting on the load just after it is released.

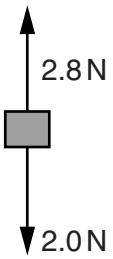


**Fig. 1.2**

Calculate the resultant force acting on the load and give its direction.

resultant force = ..... N

direction = .....

[2]

[Total: 6]

**2** A steel object has **5 kg** stamped on its side, as shown in Fig. 2.1.

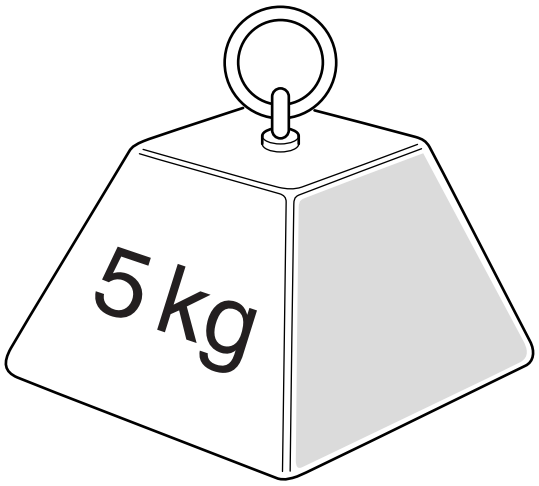


**Fig. 2.1**

View solution

**(a)** Express 5.0 kg in grams.

5.0 kg = ..... g [1]

**(b)** The density of the steel is 7.81 g/cm$^3$.

View solution

Calculate the volume of the object.

volume = .....cm$^3$ [3]

[Total: 4]

© UCLES 2014

**3** **(a)** Use words from the list below to complete the sentences about work and energy.

View solution

**initial acceleration**

**distance moved**

**force exerted**

**potential energy**

**time taken**

An object is dragged across a rough surface. In order to find the work done on the object, it is necessary to know the ..... and the ..... .

To calculate the power, it is also necessary to know the ..... . [3]

**(b)** A machine working in a factory actually uses more energy than is needed to do the task it is involved in.

View solution

Suggest why this is so.

.....

.....[2]

[Total: 5]

**4** **(a)** Thermal energy is supplied to a certain substance at a constant rate. The temperature of the substance varies with time as shown in Fig. 4.1.

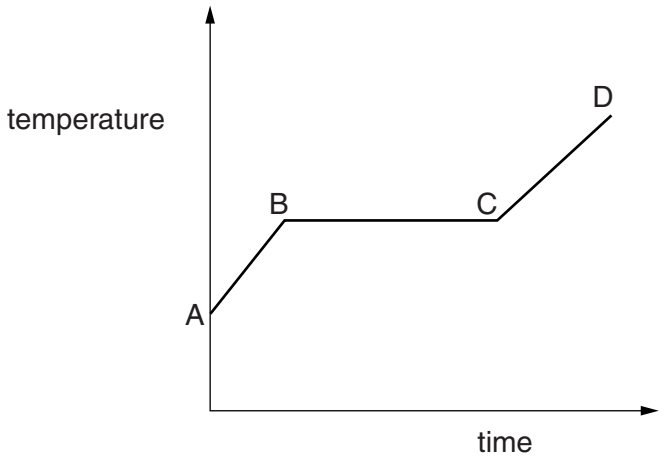


**Fig. 4.1**

At the temperature indicated by point A on Fig. 4.1, the substance is in the solid state.

State what is happening to the substance

**(i)** in the region AB,

.....

.....

**(ii)** in the region BC,

.....

.....

**(iii)** in the region CD.

.....

.....
[3]

**(b)** Suggest why ice at 0 °C is more effective for cooling a drink than the same mass of water at 0 °C.

.....

.....

.....[2]

**(c)** Steam is pumped into cold water in a container.

View solution

**(i)** State and explain what happens to the temperature of the water in the container.

statement .....

explanation .....

.....

.....

[2]

View solution

**(ii)** State and explain what happens to the mass of water in the container.

statement .....

explanation .....

.....

[2]

[Total: 9]

**5** Fig. 5.1 shows a girl standing some distance away from a rock face. She has a flat piece of wood in each hand.

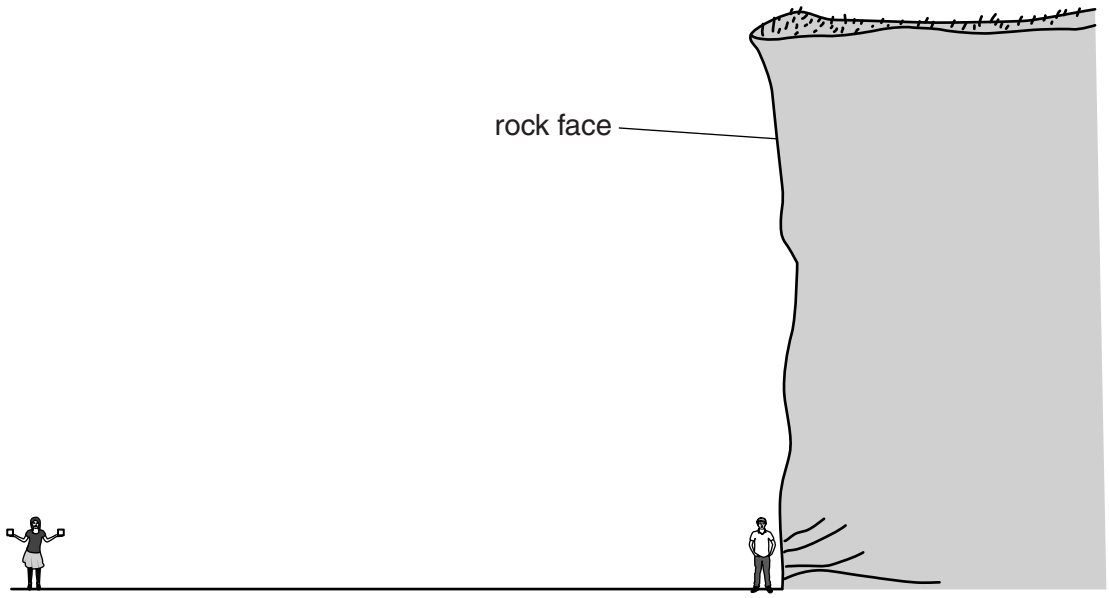


**Fig. 5.1** (not to scale)

When the girl bangs the two pieces of wood together, they make a loud sound. A short time later she hears the sound again.

**(a)** Why does she hear this second sound?

View solution

.....

.....[1]

**(b)** The time interval between the two sounds is 1.8 s. Sound travels at 330 m / s in air.

View solution

Calculate the distance of the girl from the rock face.

distance = ..... m [3]

**(c)** A boy standing very close to the rock face only hears one sound.

View solution

How long after the girl makes the sound does he hear this sound?

time interval = ..... s [1]

© UCLES 2014

**(d)** State **two** ways in which a sound wave is different from a light wave.

1. .....

2. .....
[2]

[Total: 7]

View solution

**6** **(a)** Describe

View solution

**(i)** how a dry cloth can be used to charge a plastic rod,

.....

.....

View solution

**(ii)** how the rod may be tested to check that it is charged.

.....

.....

[2]

**(b)** A lady has been riding in a car with plastic-covered seats. She gets out of the car. She touches the door handle when her feet are on the ground. She experiences an electric shock.

View solution

Suggest why this happens.

.....

.....

.....[2]

[Total: 4]

**7** Fig. 7.1 is a ray diagram representing the formation of an image by a converging lens.

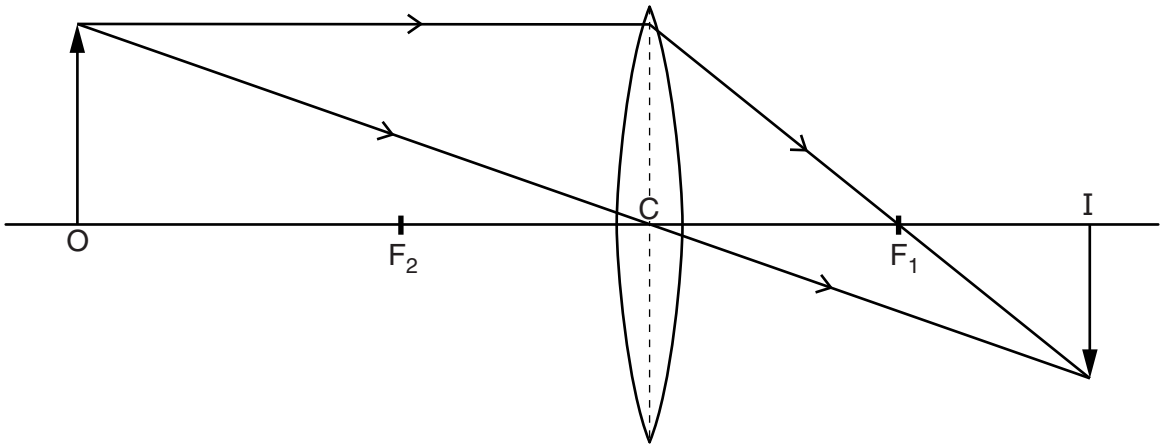


**Fig. 7.1**

$F_1$ and $F_2$ are the two principal focuses of the lens. The object is at O and its image is at I.

**(a)** On Fig. 7.1,

**(i)** accurately mark the focal length of the lens and label it *f*, [2]

**(ii)** from the top of the object, draw the path of the ray that passes through $F_2$, until it reaches the image. [2]

**(b)** Where would a screen need to be placed in order to see a focused image? Tick one box.

at $F_2$ ☐

at C ☐

at $F_1$ ☐

at I ☐

[1]

**(c)** The object is moved a small distance away from the lens.

State what this causes to happen to

**(i)** the position of the image,

.....

**(ii)** the size of the image.

.....

[2]

[Total: 7]

**8** The electric circuit in Fig. 8.1 contains a cell, two resistors and another component.

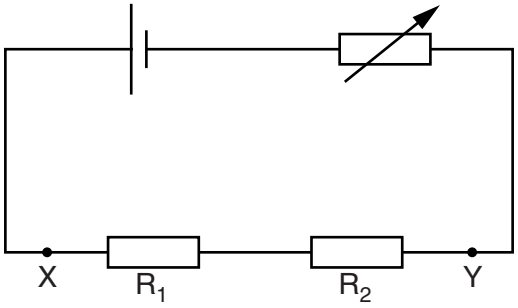


**Fig. 8.1**

**(a) (i)** Name the component that is shown in Fig. 8.1 by the symbol 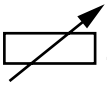.

View solution

.....

**(ii)** What is the function of this component in the circuit?

View solution

.....

.....

.....

[2]

**(b) (i)** What flows in the circuit in order to create the current in the circuit? Tick one box.

View solution

charge ☐

potential difference ☐

power ☐

resistance ☐

**(ii)** In which unit do we measure current? .....

[2]

**(c)** Resistor $R_1$ has a resistance of 8 Ω and resistor $R_2$ has a resistance of 12 Ω.

View solution

Calculate the combined resistance of $R_1$ and $R_2$ when arranged as in Fig. 8.1.

resistance = ..... Ω [2]

© UCLES 2014

**(d)** $R_1$ and $R_2$ are removed from the circuit and then re-connected between X and Y, so that they have a different combined resistance.

**(i)** In the space below, draw the circuit showing $R_1$ and $R_2$ connected in this different way.

View solution

[2]

**(ii)** What word is used to describe this different way of connecting $R_1$ and $R_2$?

.....[1]

[Total: 9]

View solution

**9** Fig. 9.1 shows a transformer used to allow lamps of different voltage ratings to be operated from a 240 V mains supply.

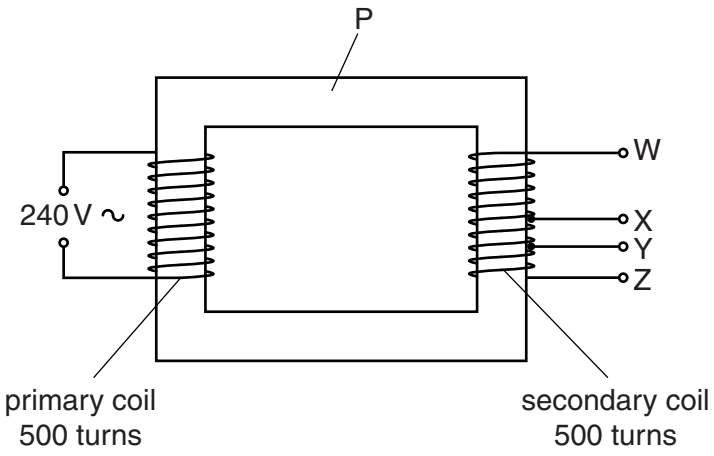


**Fig. 9.1**

The primary coil and the secondary coil both have 500 uniformly-wound turns.

Electrical connections to the secondary coil can be made at four places, W, X, Y and Z.

View solution

**(a)** The piece of metal P provides a magnetic link between the coils.

State

**(i)** the name of this part of the transformer, .....

**(ii)** the metal from which P is made. .....
[2]

**(b)** A lamp, designed to light at normal brightness with a 120 V supply, lights normally when connected between W and X.

View solution

Calculate the number of turns between W and X.

number of turns = .....[3]

© UCLES 2014

**(c)** The lamp in **(b)** is connected between X and Y.

View solution

Describe and explain what happens to the lamp.

.....

.....

.....[3]

**(d)** State what would happen if the 120V lamp in **(b)** is connected between W and Z.

View solution

.....

.....[1]

[Total: 9]

**10** Fig. 10.1 is a simplified drawing of a tube for producing, deflecting and detecting cathode rays.

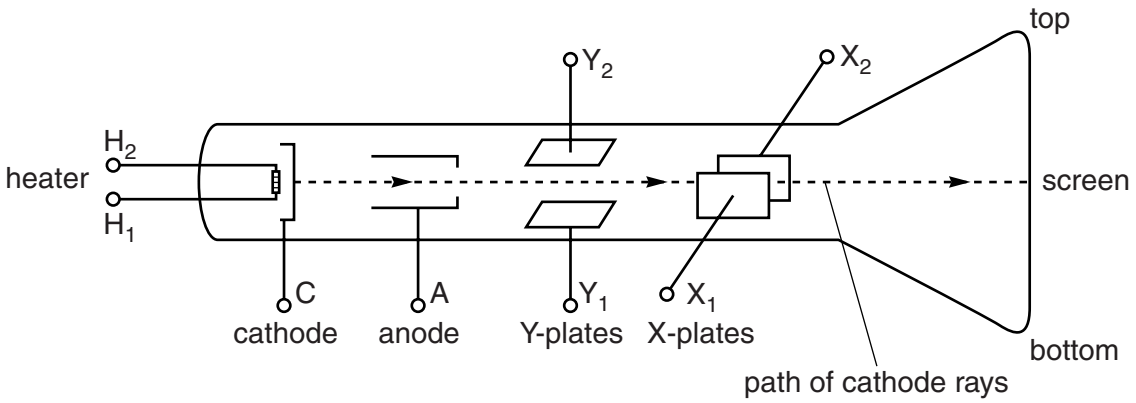


**Fig. 10.1**

The cathode rays are represented by the broken line in Fig. 10.1.

View solution

**(a)** Which particles make up cathode rays? .....[1]

**(b)** How does the screen show the presence of cathode rays? View solution

.....[1]

**(c)** Between which two of the labelled terminals should a potential difference be connected in order to

View solution

**(i)** make the cathode hot, ..... and ..... [1]

**(ii)** accelerate the cathode rays along the tube, ..... and ..... [1]

**(iii)** deflect the cathode rays to the top of the screen. ..... and ..... [1]

**(d)** In **(c)(iii)**, which of the two terminals should be made

View solution

**(i)** positive, .....

**(ii)** negative? .....

[1]

[Total: 6]

View solution

**11** Fig. 11.1 represents the atomic structure of three neutral atoms.

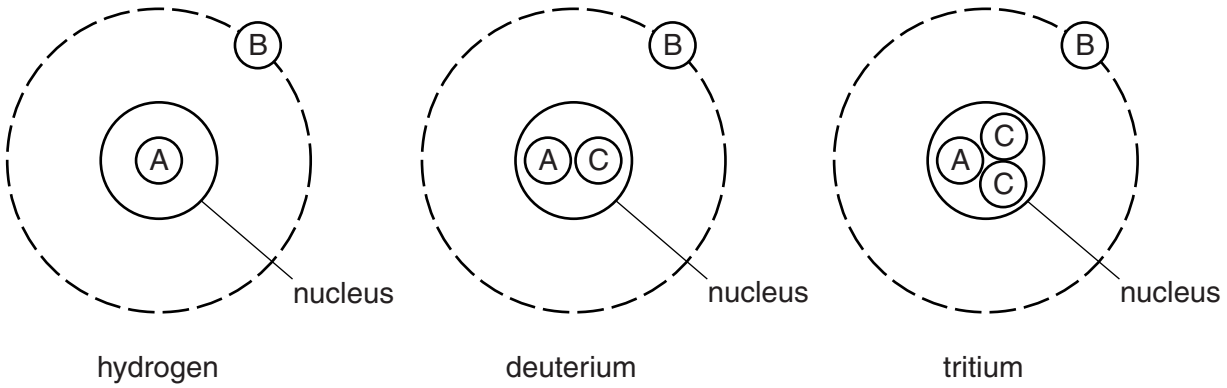


**Fig. 11.1**

View solution

**(a)** What letter in Fig. 11.1 is used to represent

**(i)** an electron, .....

**(ii)** a proton, .....

**(iii)** a neutron? .....

[2]

View solution

**(b)** State the nucleon number of the tritium atom. ..... [1]

**(c)** All three atoms may be represented by the chemical symbol H. Hydrogen can be represented in nuclide notation as ${}^{1}_{1}\mathrm{H}$.

View solution

Write down the nuclide notation for

**(i)** deuterium, .....

**(ii)** tritium. .....

[2]

[Total: 5]

View solution

© UCLES 2014

**12** 350 dice are made from small cubes of wood with one face painted blue, as shown in Fig. 12.1.

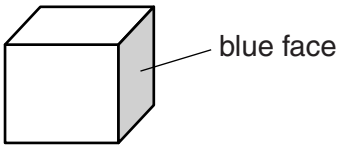


**Fig. 12.1**

Throwing large numbers of dice represents radioactive decay.

The 350 dice are thrown on a bench. All those dice that land with the blue face uppermost are removed. They are regarded as having "decayed".

The remaining dice are then thrown again, and the "blue-uppermost" dice are removed. This process is repeated until the number of dice remaining is quite small.

View solution

The table below shows the number of dice remaining after each throw.

| throw | 0 | 1 | 2 | 3 | 4 | 5 | 6 | 7 | 8 | 9 | 10 | 11 | 12 | 13 | 14 |
|---|---|---|---|---|---|---|---|---|---|---|---|---|---|---|---|
| number of dice remaining | 350 | 289 | 237 | 201 | 168 | 138 | 115 | 94 | 79 | 67 | 59 | 50 | 41 | 39 | 35 |

On Fig. 12.2, points have been plotted for some of the readings in the table.

**(a)** On Fig. 12.2, plot the first five points and draw the best smooth curve for all the points. [3]

View solution

**(b) (i)** Complete the sentence below.

The half-life of a radioactive substance is the time taken to reduce the number of nuclei of the original sort to ..... its original value. [1]

**(ii)** Throwing dice obeys the same laws as radioactive decay.

From your graph in Fig. 12.2, find the "half-life" of dice, showing clearly on Fig. 12.2 how you obtained your answer.

View solution

"half-life" of dice = ..... throws [3]

© UCLES 2014

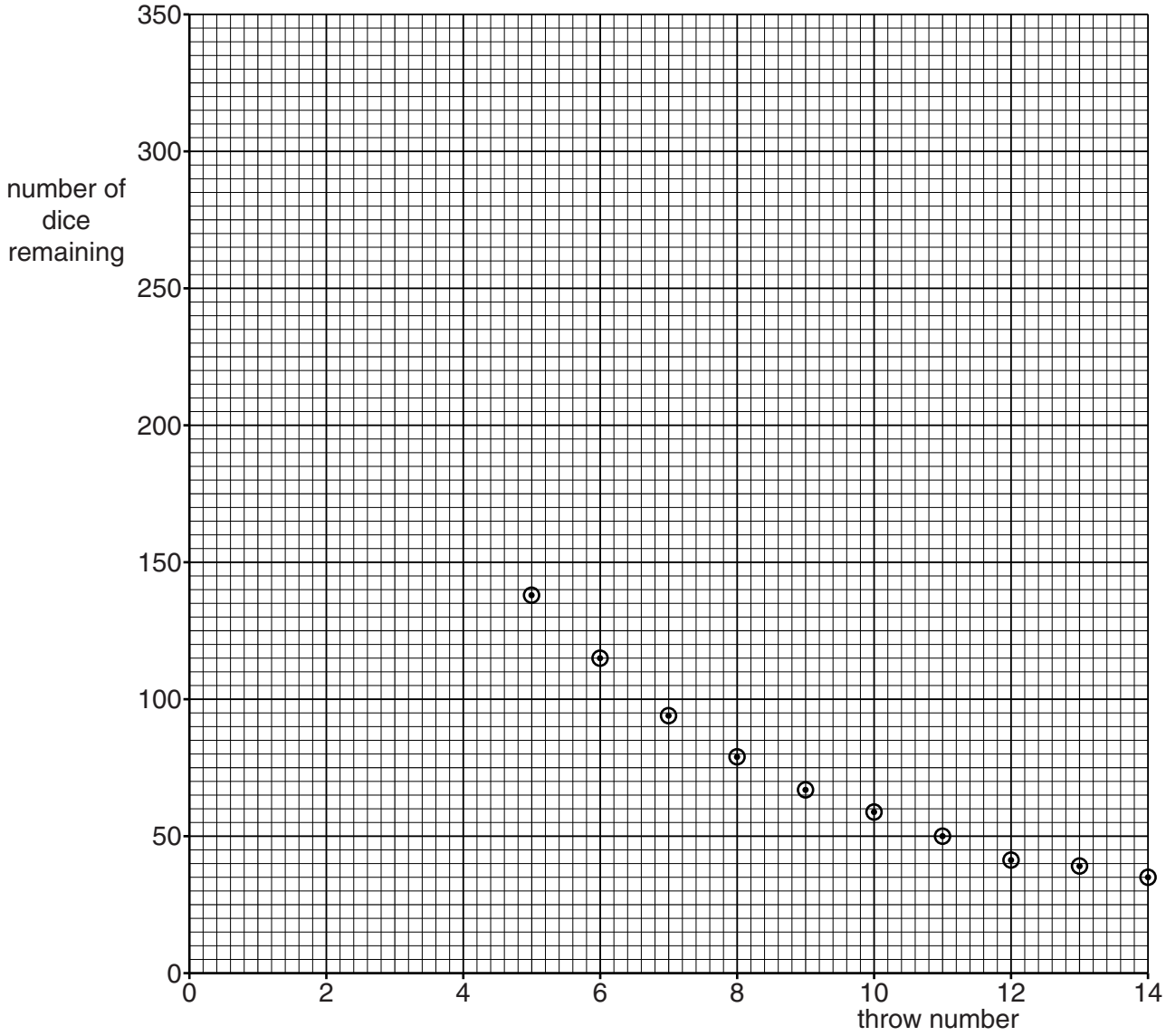


**Fig. 12.2**

View solution

**(iii)** The experiment is repeated with 800 dice.

**1.** Suggest how many throws it takes to reduce the number of dice to 400.

.....

**2.** Explain your answer.

.....

.....

[2]

[Total: 9]

© UCLES 2014

**BLANK PAGE**

Permission to reproduce items where third-party owned material protected by copyright is included has been sought and cleared where possible. Every reasonable effort has been made by the publisher (UCLES) to trace copyright holders, but if any items requiring clearance have unwittingly been included, the publisher will be pleased to make amends at the earliest possible opportunity.

Cambridge International Examinations is part of the Cambridge Assessment Group. Cambridge Assessment is the brand name of University of Cambridge Local Examinations Syndicate (UCLES), which is itself a department of the University of Cambridge.