Cambridge IGCSE

Cambridge International Examinations
Cambridge International General Certificate of Secondary Education

CANDIDATE NAME									
CENTRE NUMBER						CANDIDATE NUMBER			

PHYSICS **0625/33**

Paper 3 Extended **October/November 2014**

1 hour 15 minutes

Candidates answer on the Question Paper.

No Additional Materials are required.

READ THESE INSTRUCTIONS FIRST

Write your Centre number, candidate number and name on all the work you hand in.
Write in dark blue or black pen.
You may use a pencil for any diagrams or graphs.
Do not use staples, paper clips, glue or correction fluid.
DO **NOT** WRITE IN ANY BARCODES.

Answer **all** questions.
Electronic calculators may be used.
You may lose marks if you do not show your working or if you do not use appropriate units.
Take the weight of 1 kg to be 10 N (i.e. acceleration of free fall = 10 m/s^2).

At the end of the examination, fasten all your work securely together.
The number of marks is given in brackets [ ] at the end of each question or part question.

The syllabus is approved for use in England, Wales and Northern Ireland as a Cambridge International Level 1/Level 2 Certificate.

This document consists of **19** printed pages and **1** blank page.

© UCLES 2014

CAMBRIDGE International Examinations

1 A free-fall parachutist jumps from a helium balloon, but does not open his parachute for some time.

Fig. 1.1 shows the speed-time graph for his fall. Point B indicates when he opens his parachute.

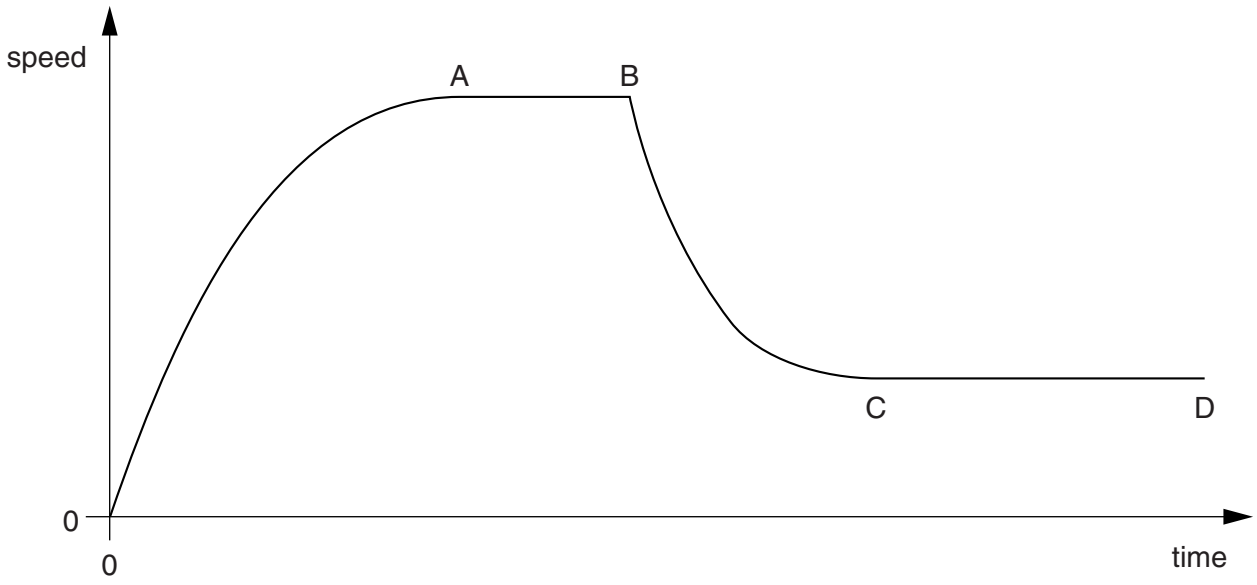

Fig. 1.1

(a) **(i)** State the value of the gradient of the graph immediately after time $t = 0$.

View solution

gradient = ... [1]

(ii) Explain why the gradient has this value.

View solution

.....

.....[1]

(b) State how Fig. 1.1 shows that the acceleration decreased between time $t = 0$ and the time to A.

.....

.....[1]

(c) Explain, in terms of forces, what is happening in section AB of the graph in Fig. 1.1.

View solution

.....

.....

.....[2]

(d) A second parachutist of the same size and mass jumps from the balloon with a larger parachute. He also opens his parachute at point B.

On Fig. 1.1, sketch a possible speed-time graph for his fall after he opens his parachute. [3]

[Total: 8]

View solution

2 Fig. 2.1 shows a uniform, rectangular slab of concrete ABCD standing upright on the ground. The slab has height 0.60 m, width 0.30 m and mass 18 kg. A force of 40 N acts horizontally to the left at B.

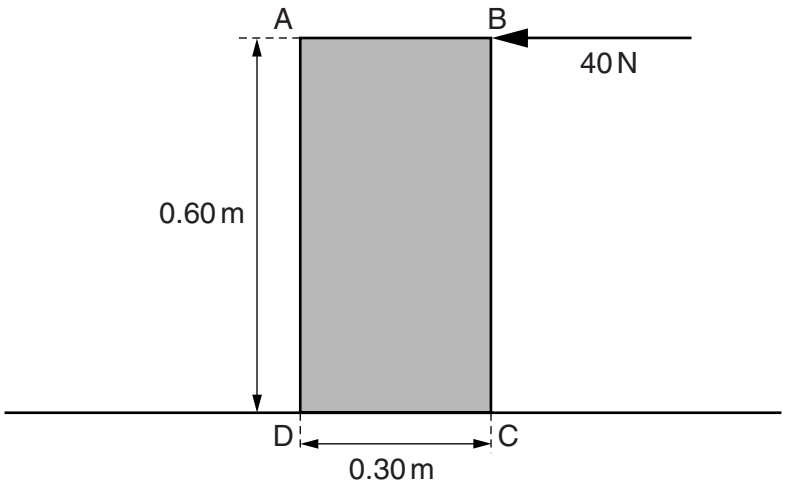

Fig. 2.1

(a) (i) Calculate the weight *W* of the concrete slab.

View solution

W = ... [1]

(ii) The thickness of the slab is 0.040 m.

Calculate the pressure exerted by the slab on the ground.

View solution

pressure = ... [2]

© UCLES 2014

(b) (i) On Fig. 2.1, draw and label an arrow to show the weight *W* of the slab acting at its centre of mass. [1]

(ii) Calculate

1. the moment of the 40 N force about point D,

View solution

moment = ...

2. the moment of *W* about point D.

moment = ...
[3]

(iii) The ground is rough so that the slab does not slide.

State and explain what happens to the slab as the horizontal force at B is gradually increased.

.....

.....

.....[2]

[Total: 9]

3 Fig. 3.1 shows a long, plastic tube, sealed at both ends. The tube contains 0.15 kg of small metal spheres.

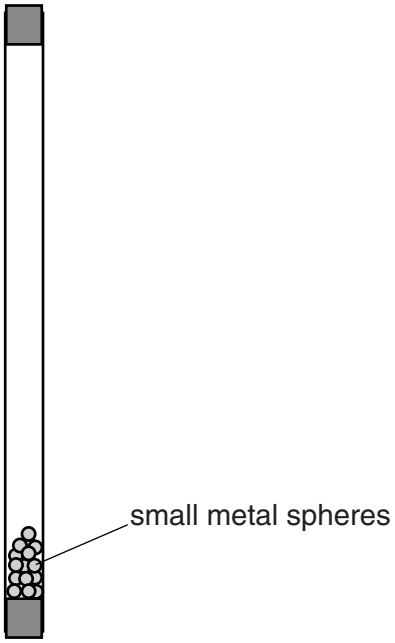

Fig. 3.1

A physics teacher turns the tube upside down very quickly and the small metal spheres then fall through 1.8 m and hit the bottom of the tube.

(a) Calculate

View solution

(i) the decrease in gravitational potential energy as the spheres fall 1.8 m,

decrease in gravitational potential energy = ... [2]

(ii) the speed of the spheres as they hit the bottom of the tube.

View solution

speed = ... [3]

© UCLES 2014

(b) The gravitational potential energy of the spheres is eventually transformed to thermal energy in the metal spheres. The physics teacher explains that this procedure can be used to determine the specific heat capacity of the metal.

(i) State one other measurement that must be made in order for the specific heat capacity of the metal to be determined.

.....

.....[1]

(ii) Suggest a source of inaccuracy in determining the specific heat capacity using this experiment.

.....

.....[1]

(iii) The teacher turns the tube upside down and lets the spheres fall to the bottom 100 times within a short period of time.

Explain why turning the tube upside down 100 times, instead of just once, produces a more accurate value of the specific heat capacity.

.....

.....

.....[2]

[Total: 9]



View solution

© UCLES 2014

4 **(a)** Fig. 4.1 shows a syringe containing 100 cm^3 of air at atmospheric pressure. Atmospheric pressure is 1.0×10^5 Pa.

View solution

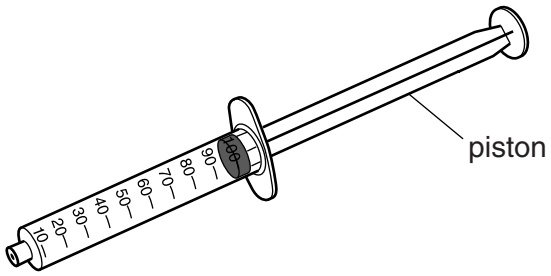

Fig. 4.1

The open end of the syringe is sealed and the piston is pushed inwards until the air occupies a volume of 40 cm^3. The temperature of the air remains constant.

Calculate the new pressure of the air in the syringe.

air pressure = ... [2]

(b) A syringe is used to transfer smokey air from above a flame to a small glass container.

View solution

Extremely small solid smoke particles are suspended in the air in the container.

The container is brightly illuminated from the side and viewed through a microscope.

(i) The movement of the suspended smoke particles is called Brownian motion. Describe this Brownian motion.

.....

.....

.....[2]

(ii) Explain what causes the motion of the smoke particles.

View solution

.....

.....

.....[2]

(c) In the space below, sketch a diagram to represent the molecular structure of a solid. Show the molecules as small circles of equal sizes.

View solution

[2]

[Total: 8]

© UCLES 2014

5 Light enters a glass fibre from air at an angle of incidence of 62°. The angle of refraction in the glass is 36°.

View solution

(a) The speed of light in air is 3.0×10^8 m/s.

Determine the speed of light in the glass fibre.

speed = ... [4]

(b) Describe how glass fibres are used in communications technology.

View solution

.....

.....

.....

.....[3]

[Total: 7]

6 **(a)** Explain why

(i) metals are good conductors of electricity,

View solution

.....

.....

(ii) insulators do not conduct electricity.

View solution

.....

.....

[3]

(b) The battery of an electric car supplies a current of 96 A at 120 V to the motor which drives the car.

(i) State the useful energy change that takes place in the battery.

View solution

.....[1]

(ii) Calculate the energy delivered to the motor in 10 minutes.

View solution

energy = ... [2]

(iii) The motor operates with an efficiency of 88 %.

Calculate the power output of the motor.

View solution

power = ... [2]

[Total: 8]

© UCLES 2014

7 **(a)** Underline the most appropriate value below for the speed of sound in water. [1]

1.5 m/s 15 m/s 150 m/s 1500 m/s 15000 m/s

View solution

(b) Sound travels in water as a series of compressions and rarefactions.

View solution

Describe what is meant by a *compression* and by a *rarefaction*.

compression .....

.....

rarefaction .....

.....

[2]

(c) An echo-sounder sends out a pulse of sound to determine the depth of the sea bed. It measures the time between sending out the pulse and receiving its echo.

View solution

Fig. 7.1 shows a boat using an echo-sounder.

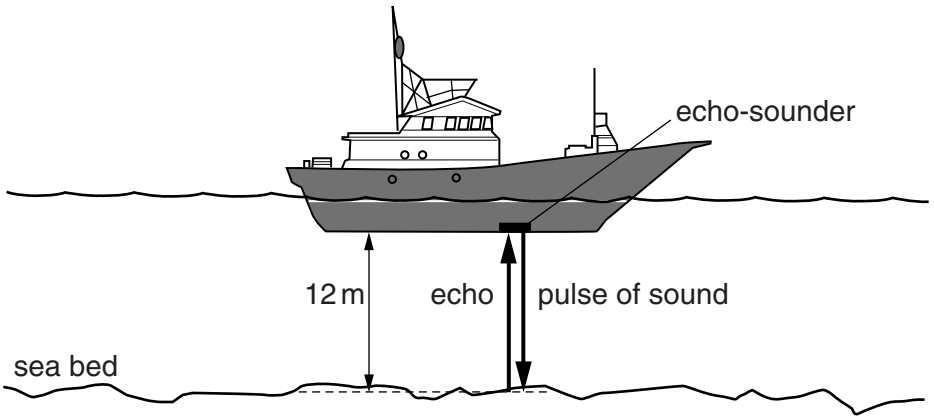

Fig. 7.1

The sea bed is 12 m below the echo-sounder.

(i) Use your value for the speed of sound in water from **(a)** to calculate the time between the sending out of the pulse and receiving its echo.

time = ... [3]

(ii) The boat passes over a region of the sea bed of the same depth, where the reflection of sound waves is weaker.

State whether there is an increase, a decrease or no change in the amplitude and pitch of the reflected wave.

amplitude .....

pitch .....

[2]

[Total: 8]

View solution

8 A student sets up a circuit containing three identical cells. Each cell has an e.m.f. (electromotive force) of 2.0 V.

Fig. 8.1 shows the cells in series with a length of uniform metal wire connected between two terminals K and L, an ammeter and a resistor X.

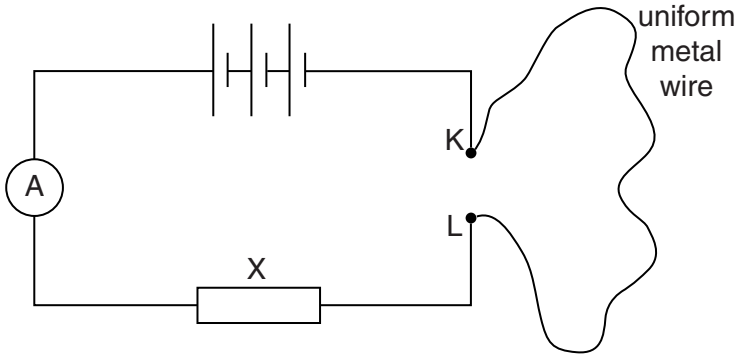

Fig. 8.1

(a) State the total e.m.f. of the three cells in series.

View solution

total e.m.f. = ... [1]

(b) The ammeter reading is 0.25 A.

View solution

(i) State the name of the unit in which electric charge is measured.

.....[1]

(ii) Calculate the charge that flows through the circuit in twelve minutes.

View solution

charge = ... [2]

(iii) The metal wire has a resistance of 16 Ω.

Calculate the resistance of resistor X.

View solution

resistance = ... [2]

© UCLES 2014

(c) The student removes the 16 Ω wire from the circuit and cuts it into two equal lengths.

He then connects the two lengths in parallel between K and L, as shown in Fig. 8.2.

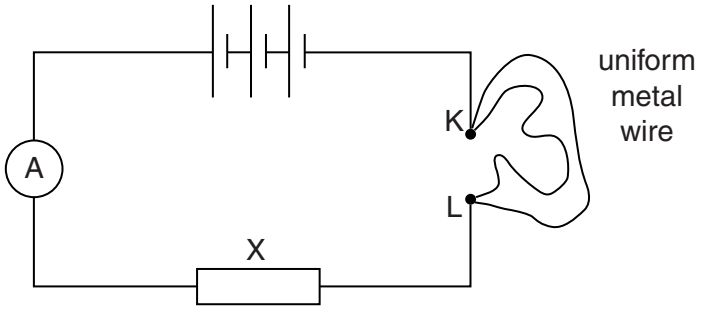

Fig. 8.2

Calculate the resistance of the two lengths of wire in parallel.

resistance = ... [3]

[Total: 9]

© UCLES 2014

9 A circuit contains a battery, a variable resistor and a solenoid. Fig. 9.1 shows the magnetic field pattern produced by the current in the solenoid.

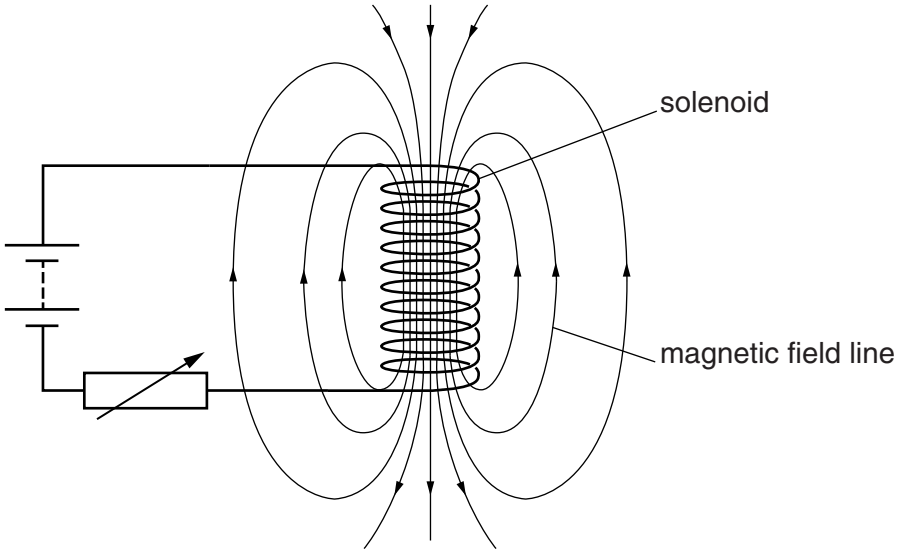

Fig. 9.1

View solution

(a) (i) State how the magnetic field pattern indicates regions where the magnetic field is stronger.

.....

.....[1]

(ii) State what happens to the magnetic field when the current in the circuit is reversed.

View solution

.....

.....[1]

(b) A second solenoid is placed next to the first solenoid.

View solution

Fig. 9.2 shows the second solenoid connected to a very sensitive ammeter.

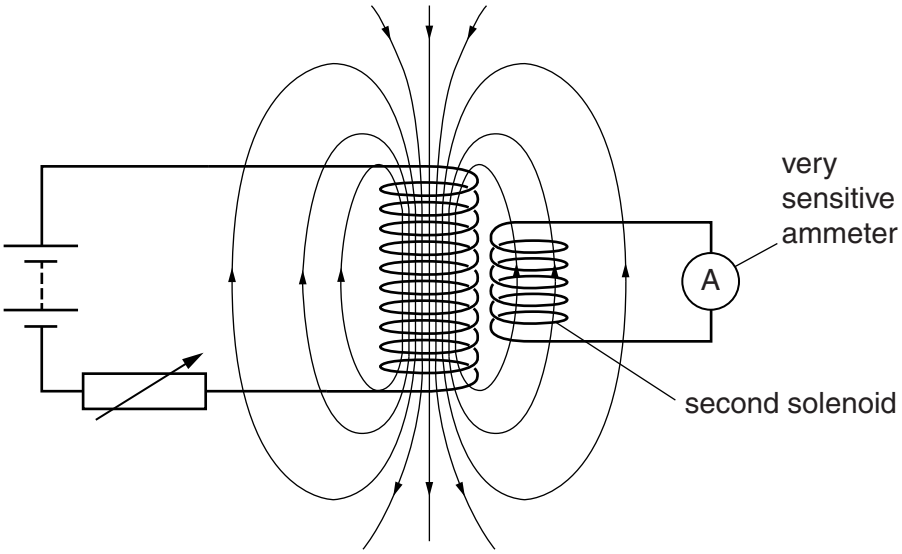

Fig. 9.2

(i) The variable resistor is adjusted so that its resistance changes quickly.

State and explain what is seen to happen in the circuit of the second solenoid.

.....

.....

.....

.....

.....[3]

(ii) The variable resistor is adjusted much more slowly than in **(i)**.

State and explain the difference in what is seen to happen in the circuit of the second solenoid.

.....

.....

.....[2]

[Total: 7]

View solution

© UCLES 2014

10 A technician sets up a radiation detector in a university laboratory, for use in some experiments. Even before the radioactive source for the experiments is brought into the laboratory, the detector registers a small count rate due to background radiation.

(a) Suggest one source of this background radiation.

View solution

.....

.....[1]

(b) The radioactive source emits γ-rays. It is placed on the laboratory bench close to the detector.

(i) State what γ-rays are.

View solution

.....

.....

.....[2]

(ii) A lead sheet of thickness 10 mm is positioned between the detector and the radioactive source.

State and explain what happens to the count rate on the detector.

View solution

.....

.....

.....[2]

© UCLES 2014

(c) In a second experiment, γ-rays pass through air to the detector, as shown in Fig. 10.1.

View solution

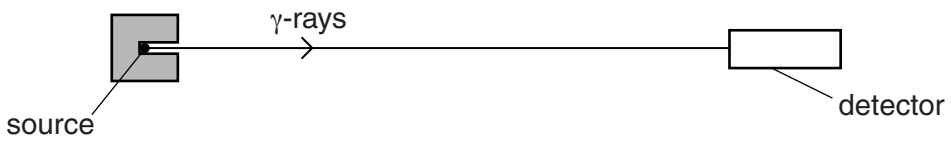

Fig. 10.1

One end of a bar magnet is brought close to the path of the γ-rays.

(i) Tick one box to indicate the effect on the path of the γ-rays. [1]

- ☐ deflected into the page
- ☐ deflected out of the page
- ☐ deflected downwards
- ☐ deflected upwards
- ☐ no deflection

(ii) Explain your answer to **(i)**.

View solution

.....

.....[1]

[Total: 7]

BLANK PAGE

Permission to reproduce items where third-party owned material protected by copyright is included has been sought and cleared where possible. Every reasonable effort has been made by the publisher (UCLES) to trace copyright holders, but if any items requiring clearance have unwittingly been included, the publisher will be pleased to make amends at the earliest possible opportunity.

Cambridge International Examinations is part of the Cambridge Assessment Group. Cambridge Assessment is the brand name of University of Cambridge Local Examinations Syndicate (UCLES), which is itself a department of the University of Cambridge.