Cambridge IGCSE

Cambridge International Examinations
Cambridge International General Certificate of Secondary Education

CANDIDATE NAME									
CENTRE NUMBER						CANDIDATE NUMBER			

PHYSICS **0625/62**

Paper 6 Alternative to Practical **October/November 2014**

1 hour

Candidates answer on the Question Paper.

No Additional Materials are required.

READ THESE INSTRUCTIONS FIRST

Write your Centre number, candidate number and name on all the work you hand in.
Write in dark blue or black pen.
You may use an HB pencil for any diagrams or graphs.
Do not use staples, paper clips, glue or correction fluid.
DO **NOT** WRITE IN ANY BARCODES.

Answer **all** questions.

Electronic calculators may be used.
You may lose marks if you do not show your working or if you do not use appropriate units.

At the end of the examination, fasten all your work securely together.
The number of marks is given in brackets [ ] at the end of each question or part question.

The syllabus is approved for use in England, Wales and Northern Ireland as a Cambridge International Level 1/Level 2 Certificate.

© UCLES 2014

CAMBRIDGE International Examinations

1 An IGCSE student is taking measurements of a sample of modelling clay. She has moulded the sample of modelling clay into a cube, as shown in Fig. 1.1.

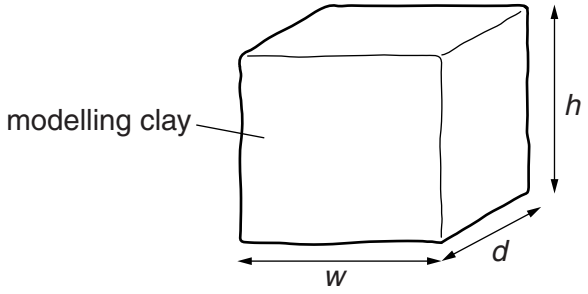

Fig. 1.1

(a) (i) On Fig. 1.2, measure the height *h* and width *w* of the piece of modelling clay.

View solution

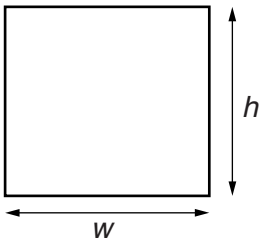

Fig. 1.2

h = ... cm

w = ... cm

(ii) On Fig. 1.3, measure the depth *d* of the piece of modelling clay.

View solution

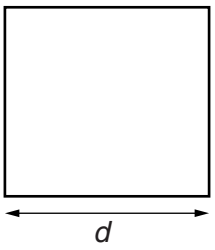

Fig. 1.3

d = ... cm

(iii) Calculate the volume V_A of the modelling clay using the equation $V_A = hwd$.

View solution

V_A = ... cm^3

(iv) The mass m of the piece of modelling clay is shown in Fig. 1.4.

View solution

Calculate the density ρ of the modelling clay using the equation $\rho = \frac{m}{V_A}$.

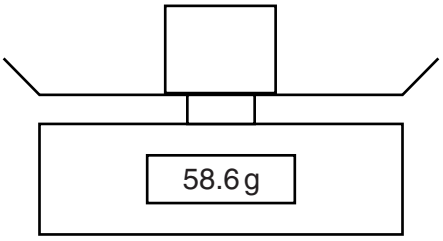

Fig. 1.4

ρ = ...

[3]

(b) The student moulds the piece of modelling clay into a spherical shape.

Draw a diagram to show how you would use two rectangular blocks of wood and a rule to measure the diameter of the sphere of modelling clay.

View solution

[1]

(c) The student pours water into a measuring cylinder, as shown in Fig. 1.5.

View solution

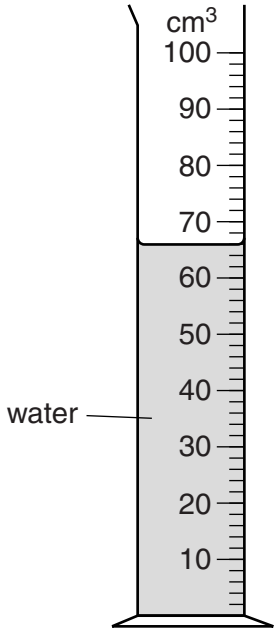

Fig. 1.5

(i) Record the volume V_1 of water shown in Fig. 1.5.

V_1 = ...[1]

(ii) On Fig. 1.5, show clearly the line of sight required to take the reading of V_1. [1]

(d) The student uses a piece of string to lower the sample of modelling clay into the measuring cylinder until it is completely covered with water. The new volume reading V_2 is 84 cm^3.

Calculate the volume V_B of the modelling clay using the equation $V_B = (V_2 - V_1)$.

View solution

V_B = ...[1]

(e) The student suggests that the volume of the modelling clay should not change when the shape is changed.

Assuming that the experiment has been carried out with care, suggest two reasons why the values V_A and V_B may not be the same.

1. .....

.....

2. .....

..... [2]

View solution [Total: 9]

© UCLES 2014

BLANK PAGE

2 The IGCSE class is investigating the cooling of hot water as cold water is added.

The apparatus is shown in Fig. 2.1.

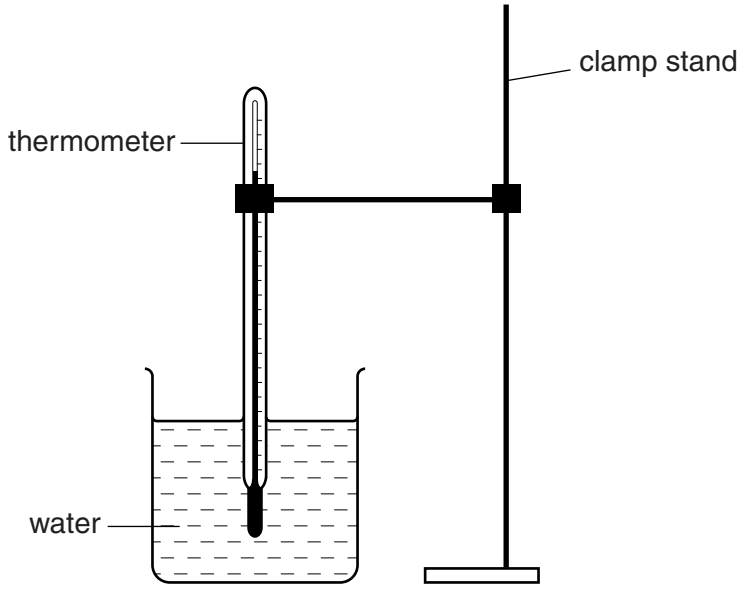

Fig. 2.1

(a) Record room temperature θ_R as shown on the thermometer in Fig. 2.2.

View solution

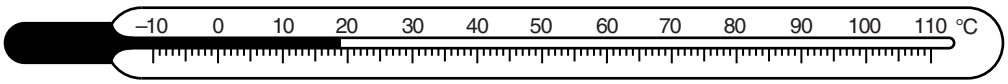

Fig. 2.2

θ_R = ... [1]

© UCLES 2014

(b) A student pours approximately 150 cm^3 of hot water into a beaker. She measures the temperature θ of the water in the beaker.

She adds a volume V = 10 cm^3 of water at room temperature to the hot water in the beaker and stirs it briefly. She measures the temperature of the water in the beaker.

She adds a total of 50 cm^3 of cold water, 10 cm^3 at a time, stirring and measuring the temperature each time. The readings are shown in Table 2.1.

View solution

Table 2.1

V/	θ/
0	82
	75
	69
	65
	61
	58

(i) The total volume of cold water added is V.

In Table 2.1, complete the volume V column.

(ii) Complete the column headings in the table.

[2]

(c) Suggest one way you could reduce the loss of thermal energy to the surroundings during the experiment.

.....

..... [1]

View solution

(d) The student has a drinks cup, held above a measuring cylinder, as shown in Fig. 2.3. The cup has a small hole in its base.

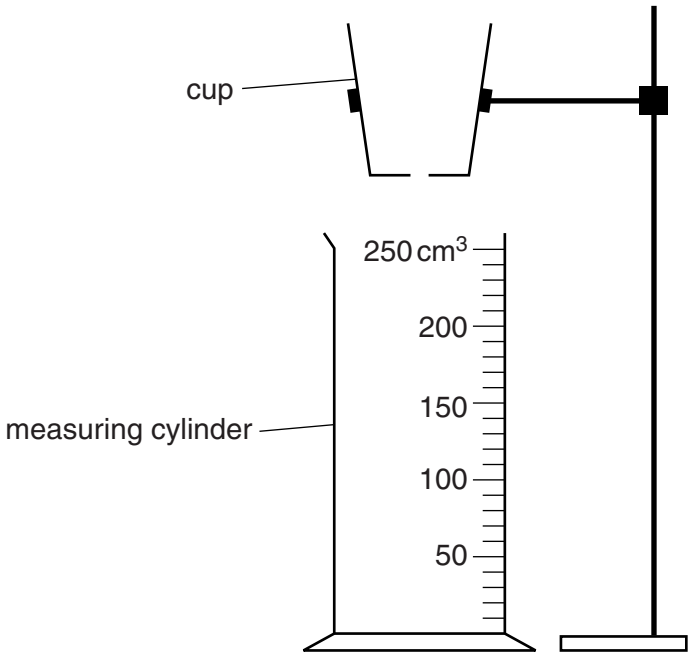

Fig. 2.3

She pours water into the cup until it is about two-thirds full. She measures the time t_1 taken for 50 cm^3 of water to fall into the measuring cylinder. The stopwatch reading is shown in Fig. 2.4.



Fig. 2.4

After setting the stopwatch to zero, she measures the time t_2 taken for the next 50 cm^3 of water to fall into the measuring cylinder. The stopwatch reading is shown in Fig. 2.5.



Fig. 2.5

© UCLES 2014

(i) Calculate the average rate of flow of water R_1 for the first 50 cm^3, using the equation $R_1 = \frac{k}{t_1}$, where $k = 50\,\text{cm}^3$.

View solution

R_1 = ...

(ii) Calculate the average rate of flow of water R_2 for the next 50 cm^3, using the equation $R_2 = \frac{k}{t_2}$, where $k = 50\,\text{cm}^3$.

View solution

R_2 = ...
[2]

(e) A student suggests that the experiment described in part **(b)** would be improved by having a steady flow of cold water added to the hot water.

Suggest one possible disadvantage of using the method described in part **(d)** to produce such a flow of water.

.....

.....
[1]

(f) The experiment described in part **(b)** could be repeated to check the results.

View solution

Suggest two conditions that should be kept constant in order to provide a reliable check.

1. .....

2. .....
[2]

[Total: 9]

© UCLES 2014

3 The IGCSE class is investigating the resistance of a wire.

Fig. 3.1 shows the circuit used.

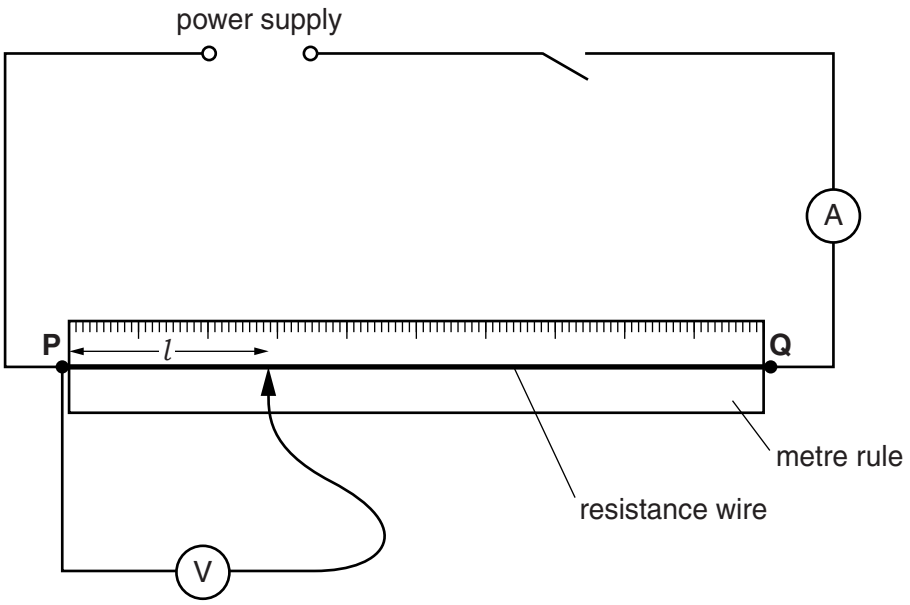

Fig. 3.1

(a) A student measures the current I in the circuit and the p.d. V across a length $l = 0.250\,\text{m}$ of the wire **PQ**.

He repeats the readings using a range of different lengths of the wire. The readings are shown in Table 3.1.

View solution

Table 3.1

l/	V/	I/	R/
0.250	0.50	0.33	
0.350	0.69	0.36	
0.450	0.90	0.32	
0.550	1.11	0.34	
0.650	1.32	0.35	
0.750	1.50	0.33	

(i) Calculate the resistance R of each length l of wire using the equation $R = \frac{V}{I}$. Record the values of R in the table.

(ii) Complete the heading for each column of the table.

[1]

View solution

(b) Plot a graph of R/Ω (y-axis) against l/m (x-axis).

View solution

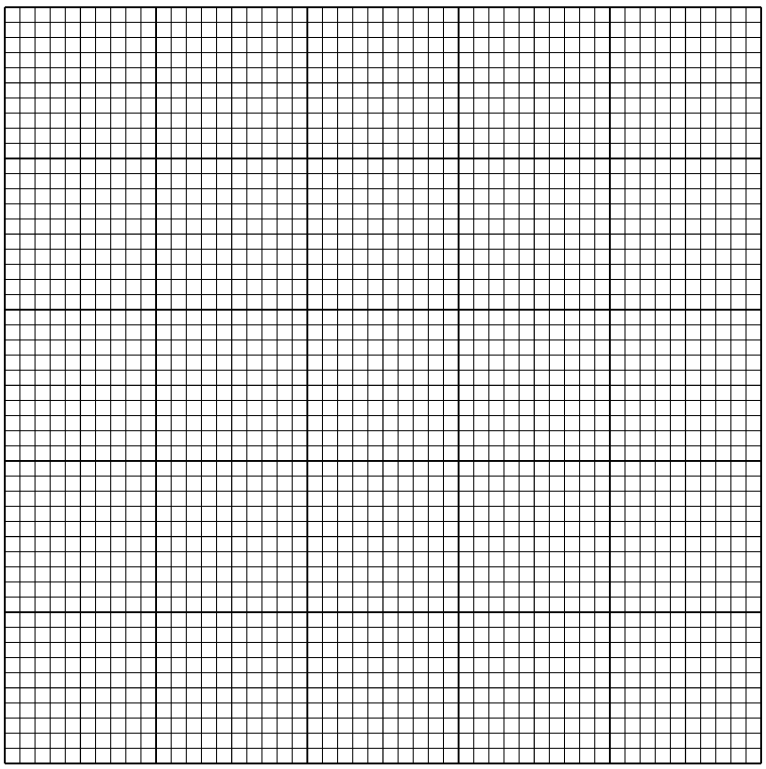

[4]

(c) Determine the gradient G of the graph. Show clearly on the graph how you obtained the necessary information.

View solution

G = ... [2]

(d) Predict the value of the resistance R_1 of 1.00 m of the resistance wire connected between **P** and **Q**. Give your answer to a number of significant figures that is suitable for this experiment.

View solution

R_1 = ... [2]

[Total: 9]

4 The IGCSE class is investigating refraction of light through a transparent block.

Fig. 4.1 shows a student's ray-trace sheet.

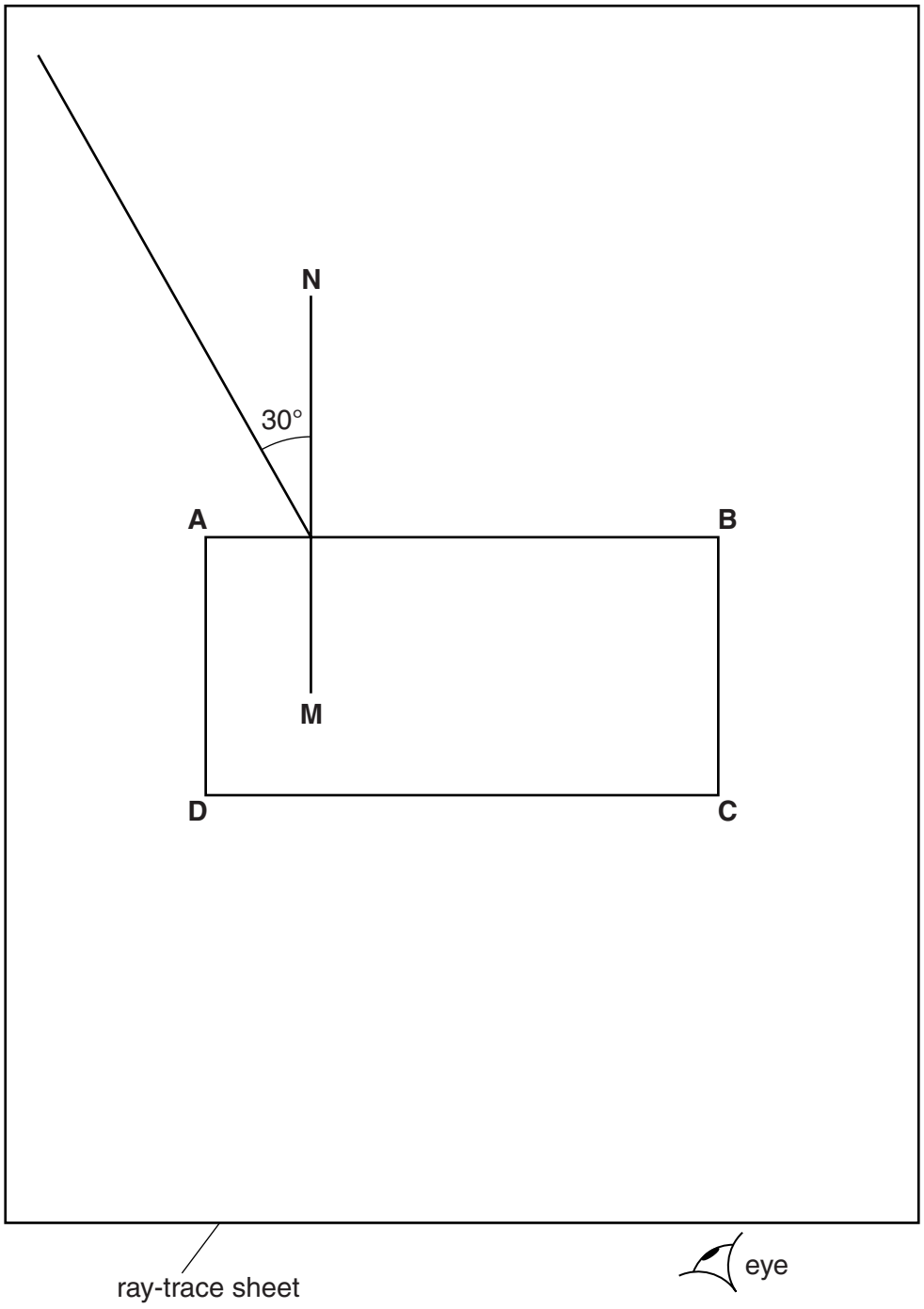

Fig. 4.1

(a) **(i)** On Fig. 4.1, label the point **F** at which the incident ray crosses the normal **NM**. Label the other end of the ray **E**.

(ii) On Fig. 4.1, draw a refracted ray from **F**, at an angle of refraction $r = 20°$, to meet side **CD** of the block. Label the point **G** at which this ray meets side **CD** of the block.

[1]

(b) Predict and draw on Fig. 4.1 the line of the ray that emerges from the block at point **G**. Label the end of your line **H**. [2]

(c) To obtain the correct positions for the emergent ray in this experiment, the student places two pins P_1 and P_2 on line **EF**. He observes the images of P_1 and P_2 through side **CD** of the block so that the images of P_1 and P_2 appear one behind the other.

He places two pins P_3 and P_4 between his eye and the block so that P_3, P_4 and the images of P_1 and P_2, seen through the block, appear one behind the other.

(i) On Fig. 4.1, mark the positions of the pins P_3 and P_4 at a suitable distance apart for this experiment. [1]

(ii) State two precautions that you should take in this experiment to obtain reliable results.

1. .....

.....

2. .....

.....

[2]

View solution

(d) The student repeats the experiment with the block turned through 90°, as shown in Fig. 4.2. He measures the angle of refraction *r*.

r = 22° .

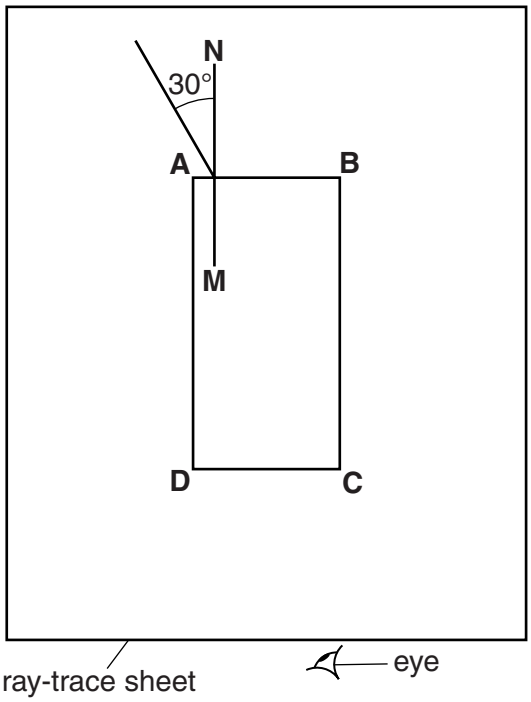

Fig. 4.2

He suggests that the value of *r* should be the same in both experiments because the material of the block has not changed.

State whether the results support this suggestion. Justify your answer by reference to the results.

statement .....

justification .....

.....

[1]

[Total: 7]

5 The IGCSE class is investigating the current in copper wires.

Each student has a selection of wires and a range of apparatus that could be used, listed below.

30 cm ruler
ammeter
electrical leads
electromagnet
electronic balance
lamp
metre rule
12 V fixed-voltage power supply
switch
tape measure
variable resistor (rheostat)
voltmeter

View solution

(a) From the list, choose the most suitable device to measure the length of approximately 20 m of copper wire.

..... [1]

(b) **(i)** Draw a circuit diagram to show the circuit that you would set up to measure the current in a sample of copper wire. The current is to be measured for a range of potential differences that must also be measured. Draw the symbol for a resistor to represent the sample of copper wire.

View solution

[3]

(ii) A student replaces the copper wire with a lamp. She switches on the circuit but the lamp does not glow.

Suggest how she can check that the lamp filament is not broken by using the circuit, and without removing the lamp.

.....

.....[1]

© UCLES 2014

(iii) State whether a 0 – 300 V voltmeter is suitable for measuring a potential difference in the circuit you have drawn in part **(b)(i)**. Give a reason for your answer.

statement .....

reason .....

.....

.....

[1]

[Total: 6]

Permission to reproduce items where third-party owned material protected by copyright is included has been sought and cleared where possible. Every reasonable effort has been made by the publisher (UCLES) to trace copyright holders, but if any items requiring clearance have unwittingly been included, the publisher will be pleased to make amends at the earliest possible opportunity.

Cambridge International Examinations is part of the Cambridge Assessment Group. Cambridge Assessment is the brand name of University of Cambridge Local Examinations Syndicate (UCLES), which is itself a department of the University of Cambridge.