Cambridge International Examinations
Cambridge International General Certificate of Secondary Education

PHYSICS **0625/13**

Paper 1 Multiple Choice **October/November 2015**

45 minutes

Additional Materials: Multiple Choice Answer Sheet
Soft clean eraser
Soft pencil (type B or HB recommended)

READ THESE INSTRUCTIONS FIRST

Write in soft pencil.
Do not use staples, paper clips, glue or correction fluid.
Write your name, Centre number and candidate number on the Answer Sheet in the spaces provided unless this has been done for you.
DO **NOT** WRITE IN ANY BARCODES.

There are **forty** questions on this paper. Answer **all** questions. For each question there are four possible answers **A**, **B**, **C** and **D**.
Choose the **one** you consider correct and record your choice in **soft pencil** on the separate Answer Sheet.

Read the instructions on the Answer Sheet very carefully.

Each correct answer will score one mark. A mark will not be deducted for a wrong answer.
Any rough working should be done in this booklet.
Electronic calculators may be used.

The syllabus is approved for use in England, Wales and Northern Ireland as a Cambridge International Level 1/Level 2 Certificate.

This document consists of **16** printed pages.

© UCLES 2015

CAMBRIDGE International Examinations

1 A student uses a measuring cylinder to measure the volume of a quantity of water.

View solution

Which action would make her result **less** accurate?

A making sure her eye is level with the water surface

B making sure the cylinder is vertical

C reading the bottom of the meniscus

D using the largest measuring cylinder possible

2 The diagram shows the distance-time graph for a car.

View solution

At which labelled point is the car moving with constant speed?

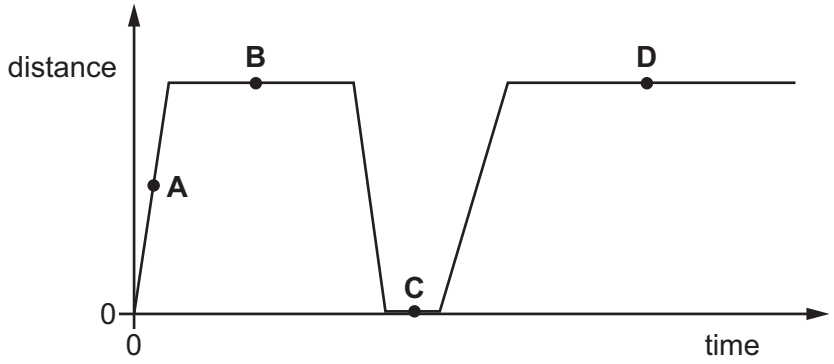

3 A car travels along the route PQRST in 30 minutes.

View solution

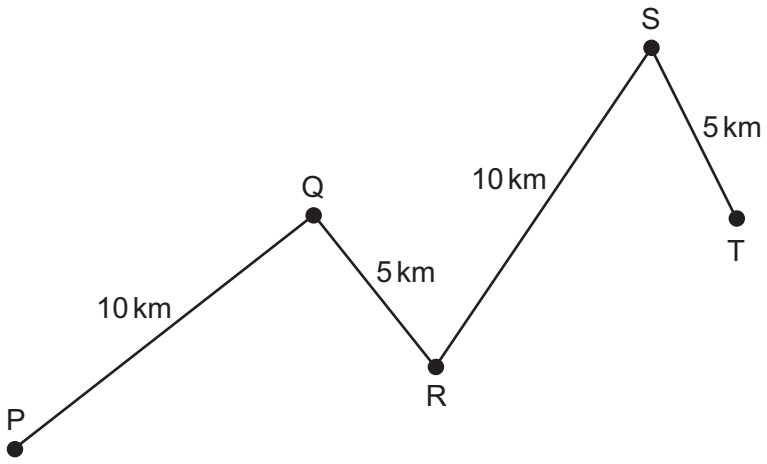

What is the average speed of the car?

A 10 km / hour **B** 20 km / hour **C** 30 km / hour **D** 60 km / hour

4 What is the weight of an object?

View solution

A the force of gravity on the object

B the gravitational potential energy of the object

C the internal energy of the object

D the mass of the object

5 The mass of a piece of metal is 1200 g.

View solution

A measuring cylinder contains 150 cm^3 of water.

The piece of metal is put into the measuring cylinder. The water level rises to 250 cm^3 and covers the metal.

What is the density of the metal?

A 3.0 g/cm^3 **B** 4.8 g/cm^3 **C** 8.0 g/cm^3 **D** 12.0 g/cm^3

6 A heavy beam rests on two supports. The diagram shows the only three forces F_1, F_2 and F_3 acting on the beam.

View solution

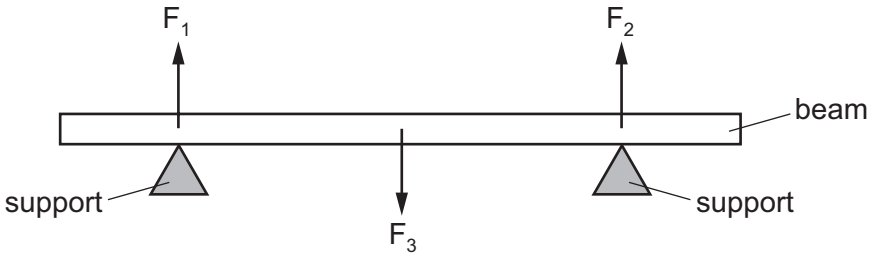

The beam is in equilibrium.

Which statement is correct?

A All the forces are equal in size.

B The resultant force on the beam is in the opposite direction to the resultant turning effect.

C The resultant force on the beam is zero and the resultant turning effect on the beam is zero.

D The total upward force is twice the total downward force.

© UCLES 2015

7 A heavy truck on wheels has a platform attached to it.

View solution

A man stands on the platform.

The truck does not fall over.

Which position **A**, **B**, **C** or **D** could be the centre of mass of the whole system (truck, platform and man)?

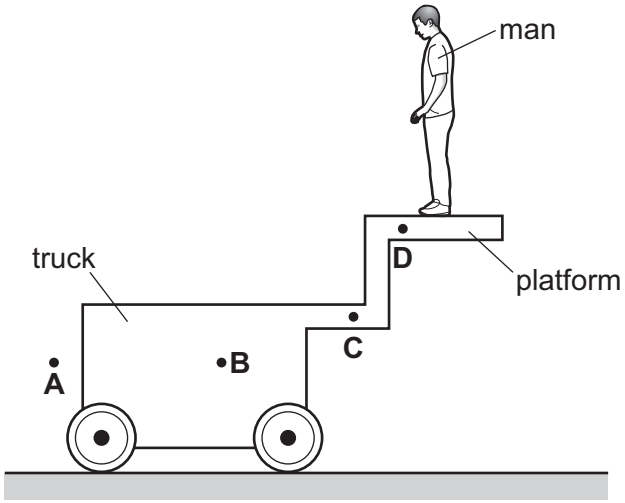

8 Which row gives the energy change in a battery and the energy change in a solar cell?

View solution

	battery	solar cell
A	chemical to electrical	electrical to light
B	chemical to electrical	light to electrical
C	electrical to chemical	electrical to light
D	electrical to chemical	light to electrical

9 Electrical energy may be obtained from nuclear fission.

View solution

In which order is the energy transferred in this process?

A nuclear fuel → generator → reactor and boiler → turbines

B nuclear fuel → generator → turbines → reactor and boiler

C nuclear fuel → reactor and boiler → generator → turbines

D nuclear fuel → reactor and boiler → turbines → generator

© UCLES 2015

10 A man is in contact with the floor.

View solution

In which of these situations does he produce the least pressure on the floor?

A kneeling

B lying flat on his back

C standing on both feet

D standing on one foot

11 The water in a lake is at 5 °C. A diver measures the pressure of the water at two different depths in the lake. He repeats the measurements on a different day when the water is at 15 °C.

View solution

The density of the water decreases when its temperature increases.

Which combination of depth and temperature produces the greatest water pressure?

	depth / m	temperature / °C
A	10	5
B	10	15
C	20	5
D	20	15

12 A car tyre has a constant volume.

View solution

Why does the pressure of the air in the tyre increase when its temperature increases?

A The air molecules hit each other less often.

B The air molecules hit the inside of the tyre less often.

C The average speed of the air molecules in the tyre is greater.

D There are more air molecules in the tyre.

13 A swimmer feels cold after leaving warm water on a warm, windy day.

View solution

Why does she feel cold even though the air is warm?

A The less energetic water molecules on her skin escape quickly.

B The more energetic water molecules on her skin do not escape quickly.

C The water on her skin does not evaporate quickly enough to keep her warm.

D The water on her skin evaporates quickly and cools her skin.

© UCLES 2015

14 A circular metal disc is heated.

View solution

Which quantity decreases?

A its density

B its diameter

C its thickness

D its volume

15 The diagram shows a mercury-in-glass thermometer. The scale of the thermometer has not been marked.

View solution



The length l increases uniformly with temperature.

The length l is measured when the thermometer bulb is placed in water at 0 °C, and also when it is in water at 100 °C. The table shows the results.

temperature / °C	length l / cm
0	2.0
100	26.0

What is the value of l when the bulb is placed in water at 50 °C?

A 12.0 cm **B** 13.0 cm **C** 14.0 cm **D** 16.0 cm

16 A heating engineer fits a heater to the ceiling of an office so that workers in the office are kept warm.

View solution

How does thermal energy reach the workers below the heater?

A conduction and convection

B convection and radiation

C convection only

D radiation only

© UCLES 2015

17 Which row shows how heating changes the density of air, and the name of the method of energy transfer caused by this density change?

View solution

	density	method of energy transfer
A	decreases	conduction
B	decreases	convection
C	increases	conduction
D	increases	convection

View solution

18 Which row correctly defines a type of wave and gives a correct example?

	wave type	direction of vibrations	example
A	longitudinal	parallel to direction of wave travel	radio waves
B	longitudinal	perpendicular to direction of wave travel	light waves
C	transverse	parallel to direction of wave travel	light waves
D	transverse	perpendicular to direction of wave travel	radio waves

View solution

19 A water wave moves quickly in deep water.

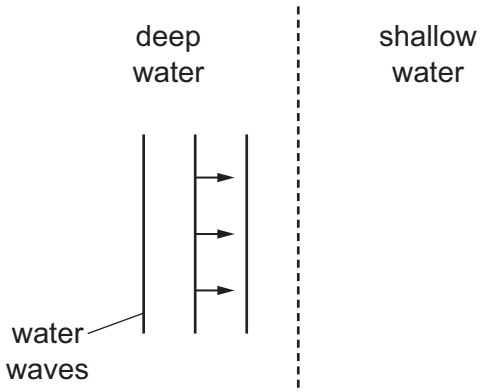

The wave now enters shallow water and its speed decreases.

Which row shows what happens to the frequency of the wave, and what happens to the wavelength of the wave?

	frequency	wavelength
A	decreases	decreases
B	decreases	does not change
C	does not change	decreases
D	does not change	does not change

© UCLES 2015

20 The diagram shows the electromagnetic spectrum.

View solution

γ-rays	X-rays	ultraviolet	visible light	infra-red	microwaves	radio waves

increasing .....→

A word is missing from the label below the spectrum.

Which word is missing?

A amplitude

B frequency

C speed

D wavelength

21 A student draws a diagram representing three rays of light from point P passing through a converging lens. Each point labelled F is a principal focus of the lens.

View solution

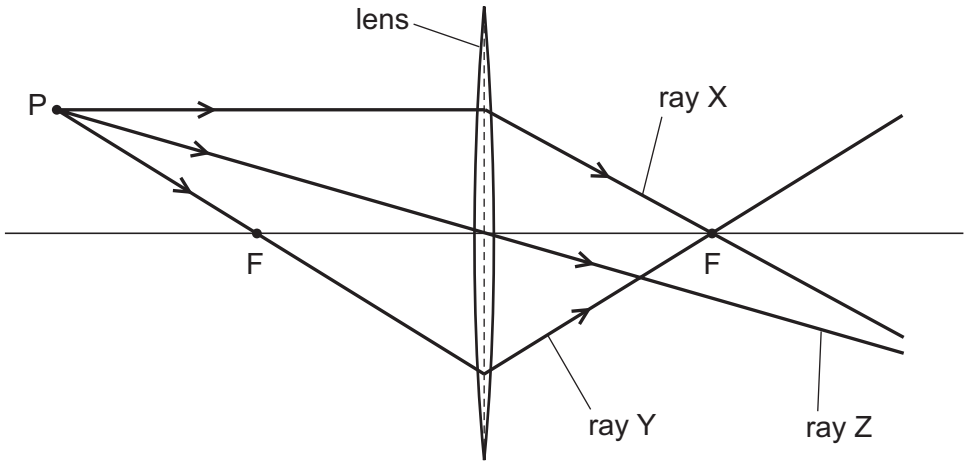

Which of the rays has the student drawn correctly?

A ray X and ray Y

B ray X and ray Z

C ray Y only

D ray Z only

© UCLES 2015

22 The diagram shows a ray of light travelling in a substance P. The ray reaches a boundary with a substance Q. Total internal reflection occurs at the boundary.

View solution

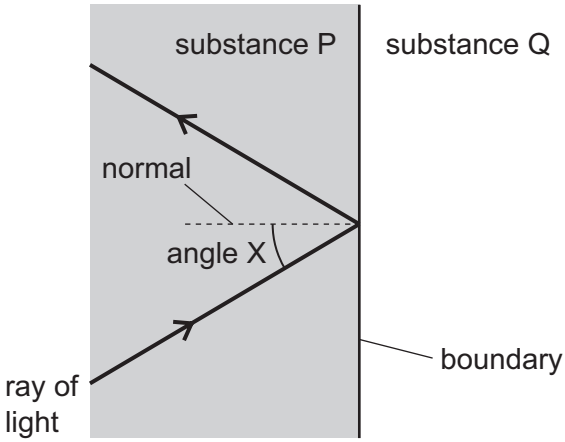

Which row contains correct statements about angle X and about the optical density of substance Q?

	angle X	substance Q
A	smaller than the critical angle	less dense than substance P
B	smaller than the critical angle	more dense than substance P
C	greater than the critical angle	less dense than substance P
D	greater than the critical angle	more dense than substance P

23 A pulse of sound is produced at the bottom of a boat. The sound travels through the water and is reflected from the sea bed. The sound reaches the boat again after 1.2 s. The speed of sound in the water is 1500 m / s.

View solution

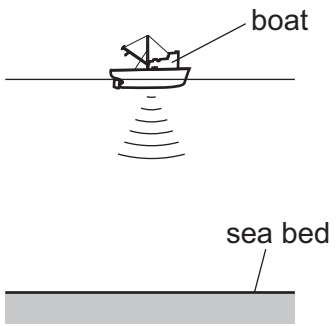

How far below the bottom of the boat is the sea bed?

A 450 m **B** 900 m **C** 1800 m **D** 3600 m

© UCLES 2015

24 Sounds are produced by vibrating objects. A certain object vibrates but a person nearby cannot hear any sound.

View solution

Which statement could explain why nothing is heard?

A The amplitude of the sound waves is too large.

B The frequency of the vibration is too high.

C The sound waves are transverse.

D The speed of the sound waves is too high.

25 Which metal could be used for a permanent magnet and which metal could be used for the core of an electromagnet?

View solution

	permanent magnet	core of electromagnet
A	iron	copper
B	iron	steel
C	steel	copper
D	steel	iron

26 Which procedure may be used to demagnetise a steel bar?

View solution

A cooling it in a freezer for several hours

B earthing it with a copper wire for several seconds

C removing it slowly from a coil carrying an alternating current (a.c.)

D rubbing it in one direction with a woollen cloth

27 A plastic rod is rubbed with a cotton cloth. This process causes the rod and the cloth to become charged. These charges cause a force between the rod and the cloth.

Which row compares the charges on the rod and the cloth, and describes the effect of the force between the rod and the cloth?

View solution

	charges on rod and cloth	effect
A	opposite	they attract
B	opposite	they repel
C	the same	they attract
D	the same	they repel

© UCLES 2015

28 A metal wire of circular cross-section has diameter d and length l.

View solution

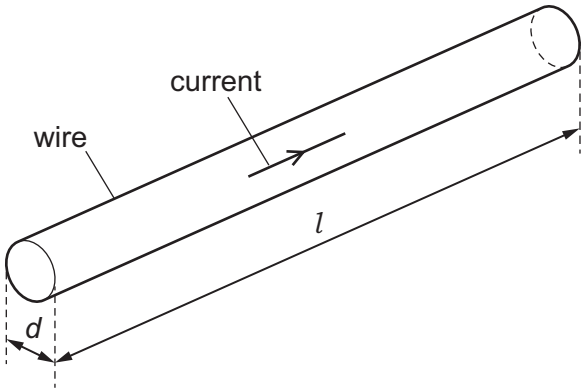

Which pair of changes, if both are carried out, **must** increase the resistance of the wire?

A decrease l and decrease d

B decrease l and increase d

C increase l and decrease d

D increase l and increase d

29 The circuit shown contains a battery, a 6.0 Ω resistor and two meters X and Y.

View solution

One meter records current and one meter records potential difference.

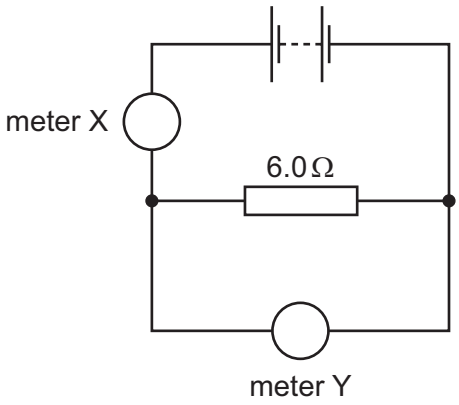

Which row shows possible values for the readings on the meters?

	meter X	meter Y
A	2.0 A	12 V
B	2.0 V	12 A
C	12 A	2.0 V
D	12 V	2.0 A

© UCLES 2015

30 A student designs a circuit to switch on a lamp after a time delay.

View solution

Which components are used in a time-delay circuit?

A a light-dependent resistor and a relay

B a resistor and a capacitor

C a resistor and a transformer

D a thermistor and a variable resistor

31 Identical resistors are connected together to form arrangements X, Y and Z.

View solution

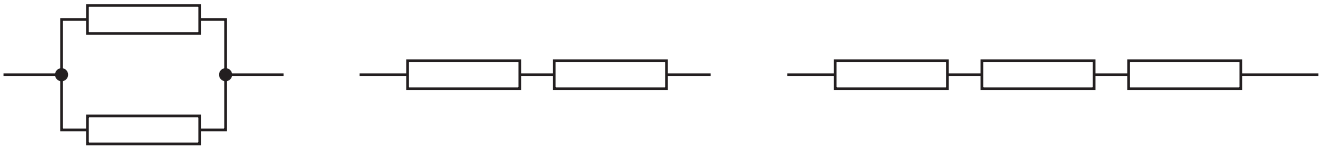

arrangement X arrangement Y arrangement Z

What is the correct order of the resistances of the arrangements from the largest to the smallest?

A $X \rightarrow Y \rightarrow Z$

B $Y \rightarrow X \rightarrow Z$

C $Z \rightarrow X \rightarrow Y$

D $Z \rightarrow Y \rightarrow X$

© UCLES 2015

32 The diagram shows a potential divider circuit.

View solution

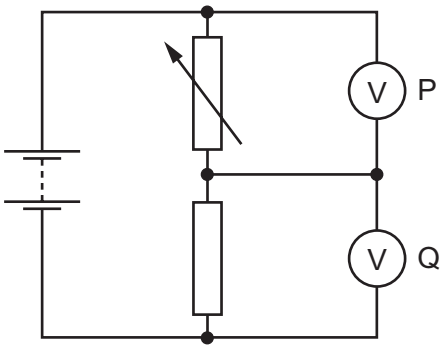

The resistance of the variable resistor is increased.

Which row shows what happens to the readings on voltmeter P and on voltmeter Q?

	reading on voltmeter P	reading on voltmeter Q
A	decreases	decreases
B	decreases	increases
C	increases	decreases
D	increases	increases

33 Four lamps are each labelled '60 W 230 V'.

View solution

In which circuit are the lamps connected so that they operate at normal brightness?

A

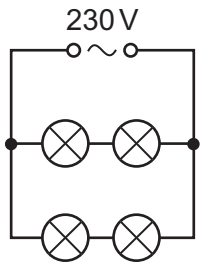

B

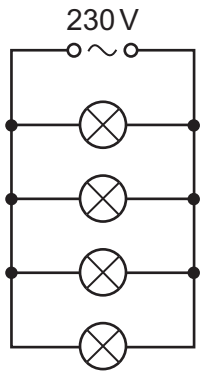

C

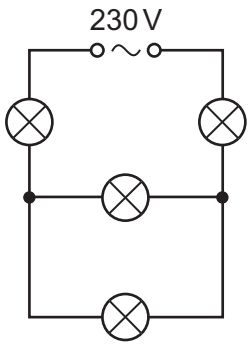

D

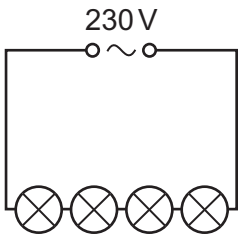

34 A student investigates electromagnetic induction. She has a bar magnet and a coil of wire that is connected to a sensitive ammeter.

View solution

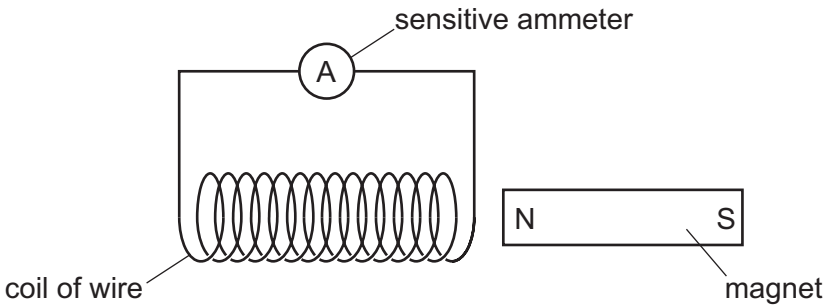

Which movement does **not** cause a reading on the ammeter?

A moving the coil to the right

B moving both the magnet and the coil to the left at the same speed

C moving both the magnet and the coil towards each other at the same speed

D moving the magnet to the left

35 The primary coil of a transformer has 200 turns. This primary coil is connected to an a.c. power supply of 25 V.

View solution

A voltmeter connected across the secondary coil reads 50 V.

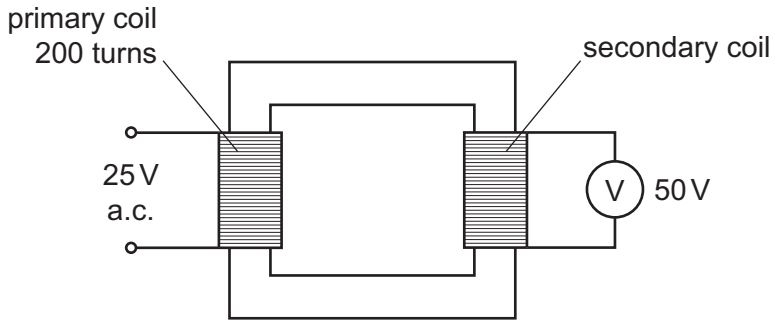

How many turns are on the secondary coil?

A 25 **B** 100 **C** 200 **D** 400

36 A current-carrying coil in a magnetic field experiences a turning effect.

View solution

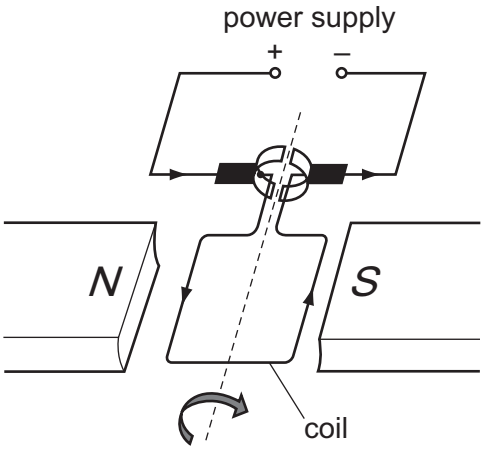

How can the turning effect be increased?

A Increase the number of turns on the coil.

B Reduce the size of the current.

C Reverse the direction of the magnetic field.

D Use thinner wire for the coil.

37 The diagram shows a cathode-ray tube. The tube is not working.

View solution

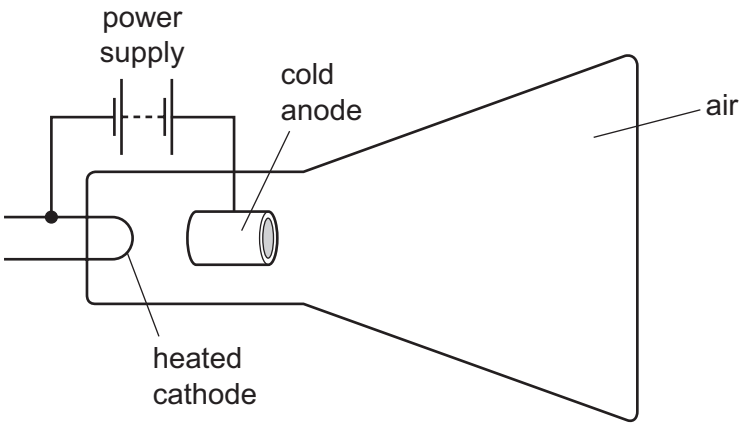

Which change should be made to make the tube work to produce cathode rays?

A Change round the connections of the power supply.

B Heat the anode instead of the cathode.

C Use an a.c. power supply instead of a d.c. power supply.

D Use a vacuum in the tube instead of air.

© UCLES 2015

38 A radioactive nucleus contains 128 nucleons. It emits a β-particle.

View solution

How many nucleons are now in the nucleus?

A 124 **B** 127 **C** 128 **D** 129

39 A student investigates how the radiation from a radioactive source changes with time.

View solution

The table shows the results from the detector used by the student.

time / minutes	count rate / counts per minute
0	340
2.0	180
4.0	100
6.0	60
8.0	40

The experiment is repeated by many other students, who also measure the count rate every two minutes.

The half-life of the source is known to be exactly 2.0 minutes.

Why is the measured count rate **always greater** than half the previous value?

A Radioactive emissions occur randomly with time.

B The detector used is very close to the source.

C There is background radiation present.

D The radioactive source is decaying.

40 The nuclide notation for radium-226 is $^{226}_{88}\mathrm{Ra}$.

View solution

How many electrons orbit the nucleus of a neutral atom of radium-226?

A 0 **B** 88 **C** 138 **D** 226

Permission to reproduce items where third-party owned material protected by copyright is included has been sought and cleared where possible. Every reasonable effort has been made by the publisher (UCLES) to trace copyright holders, but if any items requiring clearance have unwittingly been included, the publisher will be pleased to make amends at the earliest possible opportunity.

To avoid the issue of disclosure of answer-related information to candidates, all copyright acknowledgements are reproduced online in the Cambridge International Examinations Copyright Acknowledgements Booklet. This is produced for each series of examinations and is freely available to download at www.cie.org.uk after the live examination series.

Cambridge International Examinations is part of the Cambridge Assessment Group. Cambridge Assessment is the brand name of University of Cambridge Local Examinations Syndicate (UCLES), which is itself a department of the University of Cambridge.

© UCLES 2015